ML006846

MATRA MARCONI SPACE	MetOp	Ref. : MO-IC-MMT-SR-0002 Issue : 2 Rev. : 0 Date : June, 30th 1998 Page : i

JUL - 6 1998

MATRA CMT - M.F.E.N.A -

Reçu : - 1 JUIL. 1998

Archivage n° : S001

Title

SEARCH AND RESCUE REPEATER INSTRUMENT INTERFACE CONTROL DOCUMENT

S A R R I C D .

	Name and Function	Date	Signature
Prepared by :	METOP Team		
Verified by :	JL. DUQUESNE *Instrument Interface Principal Engineer* *J-f'. GARDELLE* *Integrated Payload Module APM*	01/07/98 01/07/98	
Approved by :	D. HERBIN *Product Assurance APM* *C h .* BOUSQUET *System Engineering APM*	01/07/98 1/7/98	
Authorized by :	D. PAWLAK *MMS METOP Project Manager*		

	SSST (ES.4 / EUM)	*Instrument Provider*	*Instrument supplier*	*Instrument con&actor*
Application authorized by :	P. G. EDWARDS *METOP Project Manager (ESA)* Date :	M. LANGEVIN *EPS Programme Manager (EUMETSAT)* Date :	G. COLON *Instrument System Manager Code 480 GSFC (NASA)* Date :	J. Y. R. LAPOINTE *SARSAT Project Manager (DND)* Date :

Document type	-Nb WBS	Keywords :

The distribution of this document and applicable / reference documents within Europe and North America is restricted to METOP partners only.

BLANK

DOCUMENT CHANGE LOG

Issue/ Revision.	Date	Modification Nb	Modified pages	Observations
Draft	Nov. 1995			New document - PR Issue
Draft2	May. 1996		All	Complete revision
Issue 1	Nov. 15th, 1996		All	Complete revision
Iss. 1 Rev. A	Dec. 1996	MO-LT-MMT- 1060.96	83	
Iss. 1 Rev, B	Jan. 1997	MO-FX-MMT-O087.97	9	
C/D Proposal	August 1997	MO-NT-MMT-SR-0002	82	
Issue 2	June, 30th 1998		Au	Complete revision

PAGE ISSUE RECORD

Issue of this **document** comprises the following pages at the issue shown

Pages	Issue / Revision	Pages	Issue / Revision	Pages	Issue / Revision	Pages	Issue / Revision
itoxvii	Iss. 2 Rev. 0						
1.1 to 1.27	Iss. 2 Rev. 0						
2.1 to 2.25	Iss. 2 Rev. 0						
3.1 to 3.84	Iss. 2 Rev. 0						
4.1 to 4.15	Iss. 2 Rev. 0						
5.1 to 5.18	Iss. 2 Rev. 0						
6.1 to 6.4	Iss. 2 Rev. 0						

DISTRIBUTION LIST

	MMS-F Toulouse
X	P. ARBERET
	J.C. ASTRUC
	J. AUGIER
	S. BARREAU
	P. BELLEAU
	A BENICHOU
	F. BINTER
	P. BISOGNIN
	R. BOTTON
	M. BOUFFARD
X	C. BOUSQUET
	S. BRACONNIER
	E BRUGNERA
	C. BUGE
X	S. CAMILLERI
	F. CARRE
	D. CARRILLIER
X	J. CHAMBON
	A. CHAZAL
X	P. CORRADIN
	v. COSCULLUELA
	JP. COUSTY
	G. CROS
	A DABASSE
	L. DE LA TAILLE
X	M. DELGADO
	F. DI GESU
	JP. DUMAS
X	J.L. DUQUESNE
	C. DURAND
	JPS. DURAND
	L. DUROU
	JF. ECOBICHON
	E ESTRADA
X	M. FAVREAU
	D. FORET
	D. FOSSE
	A. GACH
	J.F. GAJEWSKI
	J. GALAN
	Ph. GALLAND
X	J.P. GARDELLE
	X. GEORJON
	J.M. GOUTOULE
	M. HENAULT
	D. HERBIN
X	F. JOUFFROY
X	D. LEBRETON
	M. LEFEBVRE
	A. MARTIN
X	JP. MIELLOU
	I. MOLES
	P. MOLLET
X	JM. OBERTO
X	D.PAWLAK
	s. PEDEN
	T. PONCIN
	JJ. PUISSANT
	A REUILH
	J.P. RIEU
	v. SALMON
	R TARDIVIER

	MMS-F Toulouse ...
X	J. TISSERANT
	S. TOUZEAU
	B. VATAN

	ESTEC
	K. BUCHLER
	B. BERGAGLIO
	B. BERRUTI
	S.J. BOSMA
	S. CARLIER
	P.G. EDWARDS
	s. FIORILLI
	R FRANCIS
	R GELSTHORPE
	A. HAHNE
	RHALM
	R KRUTSCH
	A. LEFEBVRE
	s. LOKAS
	Y. MENARD
	B. NAULAIS
	E. NERI
	N. STRICKER

	EUMETSAT
	P. BLYTHE
	A. BOISSIN
	D. DIEBEL
	s. ERIKSSON
	J. EVANS
	M. LANGEVIN
	G. MASON
	A RUBACH-LARSEN
	W. J. SEYMOUR.

	DORNIER
	R. BELAU
	J. FRITZ
	H. HEIDEMANN
	R HENDRICKS
	A HERTLE
	KO. HIENERWADEL
	HP. HONOLD
	M. HOPFGARTEN
	H. KLOSTERMANN
	K. LINDEMANN
	V. LINDEKUGEL
	D. MILLER
	HJ. MULLER
	H ROMER
	B. SACHSSE
	F. TANNER

	MMS-SS
	R. BAKER
	E. BRAY
	R. CAHILL
	J. KILLICK
	A. LAING
	S. MITCHELL
	D. PIDOUX
	C. PRIOR
	N. RUFENER
	H. SMITH
	P. SOPPIT
	I. STEWART
	K. TOMKINS
	M. TOWNEND
	J. TRIPP

	ALENIA
	E. CATENA
	P. BIOCCA
	R. BORDI
	A. CAPECE
	A. CAPUZI
	A. RUSSO
	A. SALOME
	C. SCACCHETTI

	DNV
	P.O. ARALDSEN
	J. OSKARSSON
	M. PAHLE

	FOKKER
	N. BADER
	A HENDRIKX
	J. POLEY
	W. SEBEK
	G. VERMIJ
	H. VAN DER BRINK

	AEROJET
	W. MULOOLY

	AS CANNES
	P. PULITINI

	CNES
X	G. PORTAS
	G. CHALON

	GALILEO
	R. VERATTI

	ITT
	M. V. BERTIN

	MMS-P
	K. BAKER

	NASA/GSFC
	R. ALEMAN
	G. COLON
	D. CROSBY

	NDH
	J.Y.R. LAPOINTE

	NOAA
	A.M. MUCKLE

	PANAMETRICS
	F.B. SELLERS

TBC / TBD LISTS

This document includes several TBD (to be defined) and TBC (to be confirmed) on the following pages.

TBD_{SARR} on Pages	TBC_{SARR} on Pages
-	1.2 1.25 1.26
2.20 2.24	
3.11 3.15 3.73 3.74 3.75 3.78	3.75 3.76 3.82
4.4	
5.2 5.3 5.9 5.15	45.2 5.3 5.17 5.18
6.1 6.2 6.3	6.1

TBD_{MET} on Pages	TBC_{MET} on Pages
	1.14
1.14 1.20 1.22 1.23 1.24	2.14
-	
4.11	4.2 4.3 4.9 4.10
5.2 5.11	5.5 5.6 5.16
6.3	

TABLE OF CONTENTS

1. GENERAL INFORMATION

1.1. GENERAL 1.1

1.1.1. Purpose of the Document 1.1

1.1.2. Documentation.. ..... 1.1

1.1.2.1. Applicable Documentation..... 1.1

1.1.2.2. Reference Documentation.. ..... 1.2

1.1.3. Acronym List.. ..... 1.2

1.2. INSTRUMENT PRESENTATION 1.6

1.2.1. General 1.6

1.2.2. Scientific Objectives 1.6

1.2.3. Functional Description 1.8

1.2.3.1. Search And Rescue Repeater (Receiver) 1.8

1.2.3.2. Search And Rescue Repeater (Transmitter) 1.8

1.3. METOP SYSTEM OVERVIEW.. ..... 1.11

1.3.1. Spacecraft Architecture Concept 1.11

1.32. Instrument Reference Frame.. ..... 1.14

1.3.3. Orbital Parameters.. ..... 1.14 ..

1.3.3.1. Reference Orbit ..... 1.14.

1.3.3.2. Drift Orbit.. ..... 1.14

1.3.4. Satellite Mission Phases and Operations.. ..... 1.15

1.3.4.1. Mission Phases.. ..... 1.15

1.3.4.2. Satellite Operational Modes 1.15

1.3.4.2.1. Nominal Operational Mode 1.15

1.3.4.2.2. Orbit Control Modes.. ..... 1.15

1.3.4.2.3. Acquisition Modes 1.16

1.3.4.2.4. Contingency Cases 1.16

1.3.4.2.5. Safe Mode (Sun Pointing) 1.16

1.4. INSTRUMENT OPERATIONAL MODES 1.17

1.4.1. Operational Constraints 1.17

1.4.2. Instrument Mode Overview 1.18

1.4.2.1. SARR Off Mode.. ..... 1.18

1.4.2.2. SARR On Mode 1.18

1.4.3. Cross Reference Between Instrument and PLM Modes 1.19

1.5. INSTRUMENT LAUNCH AND IN-ORBIT OPERATIONS.. ..... 1.20

1.5.1. General 1.20

1.5.2. Instrument Sequences to SARR Off Mode.. ..... 1.20

1.5.2.1. Nominal Sequence to Off Mode.. ..... 1.20

1.5.2.2. Emergency Sequence to SARR Off Mode.. ..... 1.21

1.5.3. Instrument Sequences to SARR On Mode.. ..... 1.22

1.5.3.1. To SARR On Mode With A Side Receivers & A Side Transmitter.. ..... 1.22

1.5.3.2. To SARR On Mode With A Side Receivers & B Side Transmitter.. ..... 1.22

1.5.3.3. To SARR On Made With B Side Receivers & B Side Transmitter.. ..... 1.22

1.5.3.4. To SARR On Mode With B Side Receivers & A Side Transmitter.. ..... 1.23

1.5.4. Instrument Sequences During SARR On Mode : SARR In-Orbit Adjustments.. ..... 1.24

1.5.4.1. Receiver Selection (Side A) 1.24

1.5.4.2. Attenuator Settings on Receiver and Enable / Disable AGC (Side A) 1.25

1.5.4.2.1. 121.5, 243 and406 MHz Receivers 1.25

1.5.4.2.2. PDS (SARP-3) Data Attenuators 1.26

1.5.4.3. Execute Command 1.26

1.5.4.4. Disconnect 121.5 or 243 or 406 Receiver Outputs from Transmitter.. ..... 1.26

2. MECHANICAL AND THERMAL INTERFACE DESCRIPTION .....

2.1. GENERAL 2.1

2.1.1 Interface Definition 2.1

2.1.2. Module / Unit Identification 2.1

2.1.3. Instrument Reference Frame 2.2

2.1.4. Interface Drawings 2.3

2.1.4.1. Mechanical Interface Drawings 2.3

2.1.4.2. Thermal Interface Drawing 2.3

2.1.4.3. Field of View Interface Draying 2.3

2.2. MECHANICAL INTERFACE DESCRIPTION 2.12

2.2.1. Physical Envelope 2.12

2.2.2. Field of View Definition.. ..... 2.12

2.2.3. Mass Properties 2.13

2.2.3.1. Mass and Centre of Mass Location 2.13

2.2.3.2. Moments of Inertia 2.13

2.2.4. Instrument Mounting Attachments 2.14

2.2.4.1. Mounting Description 2.14

2.2.4.2. Mounting Hole Position and Reference Point (Hole) 2.14

2.2.4.3. Mounting Surface Characteristics 2.14

2.2.4.4. Instrument Location 2.15

2.2.4.5. Materials at Interfaces 2.15

2.2.4.6. Thermo-Elastic Interface 2.15

2.2.4.7. Grounding Provisions 2.15

2.2.5. Accessibility 2.16

2.2.6. On-Ground Alignment 2.17

2.2.7. Deployment Mechanisms and Pyros 2.17

2.2.7.1. Deployment Mechanisms 2.17

2.2.7.2. Pyros 2.17

2.2.8. Interface Structural Design 2.17

2.2.8.1. SARR Limit Loads 2.17

2.2.8.2. METOP Induced Limit Loads 2.17

2.2.8.3. l-g Interface Loads 2.18

2.2.8.4. Structural Frequency Characteristics 2.18

2.2.8.5. Structural Mathematical Models - Applicability for SARR 2.18

2.3. THERMAL INTERFACE DESCRIPTION 2.19

2.3.1. Instrument Thermal Control Concept.. ..... 2.19

2.3.1.1 Thermal Control During Nominal Operations 2.19

2.3.1.2. Thermal Control During Non Nominal / Contingency Operations.. ..... 2.19

2.3.2. Instrument Thermal Requirements 2.20

2.3.2.1. Instrument Temperature Range.. ..... 2.20

2.3.2.1.1. On-Orbit Temperature Range.. ..... 2.20

2.3.2.1.2. Ground Testing Temperature limits 2.20

2.3.2.1.3. Ground Storage and Transportation Temperature Range 2.20

2.3.2.2. Temperatures at the Interface.. 2.21
2.3.2.3. Radiative Requirements 2.21
2.3.3. Thermal Control Budgets 2.22
2.3.3.1. Heater Power Budgets.. 2.22
2.3.3.2. Instrument Thermal Dissipation 2.22
2.3.3.3. Heat Exchange Budgets 2.22
2.3.3.3.1. Conductive Heat Transfer Budget.. 2.22
2.3.3.3.2. Joint Characteristics 2.22
2.3.3.3.3. Radiative Heat Transfer Budget 2.22
2.3.4. Thermal Interfaces 2.23
2.3.4.1. Conductive Interfaces.. 2.23
2.3.4.2. Radiative Interfaces 2.23
2.3.4.2.1. Radiative Characteristics 2.23
2.3.4.2.2. Thermo-Optical Properties 2.23
2.3.4.3. Thermal Heat Capacity 2.23
2.3.4.4. Instrument Temperature Measurement.. 2.24
2.3.4.5. Heater Definition 2.24
2.3.4.6. Thermal Interface Models 2.24
2.4. INSTRUMENT AND DISTURBANCE INTERFACES 2.25

3. COMMAND AND CONTROL, MEASUREMENT DATA, ELECTRICAL, EMC AND RFC INTERFACE DESCRIPTION

3.1. ELECTRICAL INTERFACE OVERVIEW 3.1

3.2. COMMAND AND CONTROL FUNCTIONAL DESCRIPTION 3.3

3.2.1. Protocol.. 3.3

3.2.2. Telecommands 3.3

3.2.2-l. Telecommand Definition 3.4
3.2.2.2. Telecommand Functional Description.. 3.5

3.2.3. Housekeeping Telemetry 3.10

3.2.3.1. General Requirements 3.10
3.2.3.2. Digital B Telemetry 3.11
3.2.3.3. Analog Telemetry 3.12

3.2.4. Telecommand Verification.. 3.18

3.2.5. METOP Specific Thermal Control Electrical Interfaces.. 3.20

3.2.5.1. Transmitter Pallet 3.20

3.2.5.2. Receiver Pallet. 3.20

3.26. Satellite Services / Synchronization.. 3.20

3.3. MEASUREMENT DATA TRANSFER FUNCTIONAL DESCRIPTION 3.21

3.4. POWER ELECTRICAL INTERFACES 3.22

3.4.1. Overview 3.22

3.4.2. Power Demand.. 3.25

3.4.3. Power Electrical Interface Requirements.. 3.27

3.4.3.1. Power Interface Data Sheets.. 3.27

3.4.3.2. Power Interface Circuits.. 3.32

3.4.4. Power Connectors 3.34

3.4.5. Power Pin Allocation Lists 3.34

3.5. SIGNAL ELECTRICAL INTERFACES 3.40

3.5.1. Overview 3.40

3.52. Signal Interfaces With PLM Units.. 3.40

3.5.2.1. Signal Electrical Interface Requirements (Interfaces With PLM Units). 3.40

3.5.2.1.1. Signal Electrical Interface Data Sheets (Interfaces With PLM Units) 3.42

3.5.2.1.2. Signal Interface Circuits (Interfaces With PLM Units) 3.47

3.5.2.2. Signal Connectors (Interfaces With PLM Units). 3.52

3.5.2.3. Signal Pin Allocation Lists (Interface With PLM Units) 3.52

3.5.3. Signal Interfaces With SARP-3, RFF and SLA. 3.61

3.5.3.1. Signal Interface Requirements (Interfaces With SARP-3. RFF and SLA) 3.61

3.5.3.1.1. Signal Interface Data Sheets (Interfaces With SARP-3). 3.61

3.5.3.1.2. Signal Interface Circuits (Interfaces With SARP-3). 3.63

3.5.3.2. Signal Connectors (Interfaces With SARP-3, RFF, SLA) 3.64

3.5.3.3. Signal Pin Allocation List (Interfaces With SARP-3, RFF and SLA) 3.64

3.6. TEST INTERFACES 3.67

3.7. HARNESS.. 3.68

3.8. EMC INTERFACE DESCRIPTION 3.69

3.8.1. Electrical Bonding.. ..... 3.69

3.8.1.1. General.. ..... 3.69

3.8.1.2. Joint Faces 3.69

3.8.1.3. Structural Parts 3.69

3.8.1.4. Unit Housings.. ..... 3.69

3.8.1.4.1. Bonding of Unit Cases 3.69

3.8.1.4.2. Bonding of Thermally Isolated Boxes 3.69

3.8.1.4.3. Bonding of Unit mounted on CFRP or Non-conductive Parts 3.69

3.8.1.4.4. DC Resistance between Adjacent Unit Case Parts.. ..... 3.69

3.8.1.4.5. DC Resistance between Bonding Stud and Mounting Feet 3.69

3.8.1.5. Thermal Blankets.. ..... 3.69

3.8.1.6. Cable and Harness Shields 3.70

3.8.1.6.1. Grounding of Cable Shields.. ..... 3.70

3.8.1.6.2. Bonding of Overall Harness Shields.. ..... 3.70

3.8.1.7. Connectors 3.70

3.8.1.7.1. Design of Connectors 3.70

3.8.1.7.2. Bonding Resistance of Connector Receptacle 3.70

3.8.1.7.3. Bonding Resistance of Connector Back Shell 3.70

3.8.2. Grounding and Isolation.. ..... 3.71

3.8.2.1. +28V Main Power Ground.. ..... 3.71

3.8.2.2. +28V Switched Telemetry Ground 3.71

3.8.2.3. +10V Interface Ground.. ..... 3.71

3.8.2.4. Signal Ground 3.71

3.8.3. Shielding 3.73

3.8.3.1 Wiie Shielding.. ..... 3.73

3.8.3.1.1 Bonding of Shields 3.73

3.8.3.1.2 Overall Shield 3.73

3.8.3.1.3 Shields as Current-Carrying Conductors 3.73

3.8.3.2. Case Shielding 3.73

3.8.3.2.1. Non-magnetic Metallic Housing 3.73

3.8.3.2.2. Case Apertures 3.73

3.8.3.2.3. Venting Holes 3.73

3.8.4. SARR Frequency Characteristics 3.74

3.8.5. Magnetic Moment 3.74

3.8.6. EMC Performance Requirements 3.74

3.9. RF INTERFACE DESCRIPTION 3.75

3.9.1. Receive Function Characteristics.. ..... 3.75

3.9.1.1. Receiver Electrical Characteristics 3.75

3.9.1.2. Receiver RF Characteristics.. ..... 3.78

3.9.2. Transmitting Function Characteristics 3.79

3.9.2.1. Transmitter Electrical Characteristics 3.79

3.9.2.2. Transmitter RF Characteristics 3.82

3.9.2.2.1. Carrier Spectrum 3.82

3.9.2.2.2 Harmonics Contents 3.82

3.9.2.2.3. Spurious Emissions.. ..... 3.82

3.9.3. METOP RF Accommodation 3.83

4. INSTRUMENT VERIFICATION DESCRIPTION .....

4.1. MECHANICAL / STRUCTURAL VERIFICATION.. ..... 4.1

4.1.1. Structural Analysis 4.1

4.1.1.1. Quasi-Static Loads (Interface) 4.1

4.1.1.2. Structural / Dynamic Analyses 4.1

4.1.1.3. Instrument Shock Environment 4.1

4.1.2. Structural Tests 4.1

4.1.2.1. Structural Mathematical Model Validation.. ..... 4.1

4.1.2.2. Vibration Test : High Level Sine Sweep.. ..... 4.2

4.1.2.3. Vibration Test : Sine Burst 4.2

4.1.2.4. Vibration Test : Random Levels 4.3

4.1.2.5. Acoustic Test 4.3

4.2. THERMAL VERIFICATION : THERMAL TESTS 4.4

4.2.1. Thermal Balance Test 4.4

4.2.2. Thermal Vacuum Tests 4.4

4.3. EMC VERIFICATION 4.5

4.3.1. EMC Performance Requirements 4.5

4.3.1.1. Conducted Emission 4.5

4.3.1.1.1. SARR Design Requirements 4.5

4.3.1.1.2. METOP Requirements 4.5

4.3.1.2. Conducted Susceptibility 4.7

4.3.1.3. Radiated Emission 4.9
4.3.1.3.1. SARR Design Requirements (Mil-Std-RE02 Requirements). 4.9
4.3.1.3.3. METOP Requirements 4.9
4.3.1.4. Radiated Susceptibility 4.11
4.3.1.4.1. SARR Design Requirements 4.11
4.3.1.4.2. METOP Requirements. 4.11
4.3.2. EMC Analysis 4.12
4.3.3. EMC Tests 4.12
4.4. ELECTRICAL FUNCTIONAL VERIFICATION 4.13
4.4.1. Electrical Interface Tests 4.13
4.4.2. Functional Test.. ..... 4.13
4.4.3. Performance Test 4.13
APPENDIX : INSTRUMENT ACHIEVED QUALIFICATION STATUS 4.14
5. INSTRUMENT GSE AND AIV INTERFACES .....
5.1. INSTRUMENT GSE DESCRIPTION 5.1
5.1.1. SARR Test Equipment 5.1
5.1.2. GSE for Integration with PLM OCOE 5.2
5.1.3. Mechanical Ground Support Equipment. 5.2
5.1.4. Self-Contained Special Test Equipment.. ..... 5.2
5.2. INSTRUMENT GSE INTERFACES 5.3
5.2.1. Interfaces with PLM OCOE 5.3
5.2.1.1. General.. ..... 5.3
5.21.2. Stimulus/Feedback Equipment Interface.. ..... 5.3
5.2.1.2.1. Communication port" T 5.3
5.2.1.2.2. Message Format;. 5.3
5.2.1.2.3. Communication Protocol.. ..... 5.3
5.2.1.2.4. Mission Data electrical Interface 5.5
5.2.1.2.5. Mission Data Format.. ..... 5.5
5.2.1.2.6. Stimulus/Feedback Data Handling Requirements 5.5
5.2.1.3. Interface with Instrument provided Data Processing Equipment 5.5
5.2.1.4. Measurement Data Evaluation 5.5

52.2. Interfaces with the PLM On-Board Equipment 5.6

5.2.2.1. Test Harness and Connectors 5.6

5.2.2.2. Special Test Adapters (T-Junctions, Break-Gut Boxes) 5.6

5.2.2.3. Stimuli Source Configuration / Arrangement Requirement.. ..... 5.6

5.2.3. Interfaces with other PLM GSE 5.6

5.2.4. Interfaces with AIT and Launch Site Facilities 5.6

5.2.4.1. Mains Power 5.6

5.2.4.2. Cooling / Thermal Dissipation Requirements 5.6

5.2.4.3. Purging Gas Requirements.. ..... 5.7

5.2.4.4. GN_2 / LN_2 Supply 5.7

5.2.4.5. Test Chamber Wall Feed-Through Panels.. ..... 5.7

5.2.4.6. Public Data Net Communication Requirements 5.7

5.2.4.7. Physical Interfaces 5.7

5.3. INSTRUMENT GROUND OPERATION REQUIREMENTS 5.8

5.3.1. General 5.8

5.3.2. Command and Control Sequences.. ..... 5.8

5.3.2.1. Ambient Conditions 5.9

5.3.22. Thermal Vacuum Conditions 5.9

5.3.3. Hazards / Precautions 5.9

5.4. INSTRUMENT ACCEPTANCE AT AIT SITE 5.10

5.4.1. Unpacking / Packing and Handling Requirements 5.10

5.4.2. Incoming Inspection 5.10

5.4.3. Instrument Self-Compatibility Test 5.10

5.5. INTEGRATION ON METOP 5.11

5.5.1. Pre-Integration 5.11

5.5.1.1. Pre-Integration with RF Accommodation Hardware.. ..... 5.11

5.5.1.2. Pre-Integration 5.11

5.52. Mechanical / Thermal Integration 5.11

5.5.3. Electrical Integration and IST´s 5.13

5.5.4. Integration of GSE 5.14

5.5.4.1. Integration of GSE with the Flight Equipment 5.14

5.5.4.2. GSE Integration with PLM OCOE 5.14

5.6. INSTRUMENT OPERATION CONSTRAINTS DURING PLM AND SATELLITE SYSTEM TESTS 5.15

5.6.1. System Environmental Test Levels 5.15

5.6.1.1. Structural Tests 5.15

5.6.1.2. Thermal Tests 5.15

5.6.1.3. EMC/RFC Tests 5.15

5.6.2. Function and Performance Tests 5.16

5.6.2.1. System Functional Tests (SFT) 5.16

5.6.2.2. Special Performance Test (SPT) 5.16

5.6.2.3. Abbreviated Functional Tests (AFT) 5.16

5.7. INSTRUMENT CONSTRAINTS ON GROUND ENVIRONMENTAL CONDITIONS 5.17

5.7.1. AIT Site 5.17

5.7.2. Launch Site 5.17

5.7.3. Transportation 5.17

5.7.4. Storage 5.17

5.8. LAUNCH CAMPAIGN 5.18

5.8.1. Launch Preparation 5.18

5.8.2. Red Tagged Items 5.18

6. PRODUCT ASSURANCE .....

6.1. CLEANLINESS/CONTAMINATION..... 6.1

6.1.1. Deposited Contamination Level 6.1

6.1.2. Integration Facilities ..... 6.1.

6.1.3. Instrument Aperture Protection 6.1

6.1.4. Purging 6.1

6.1.5. Space Conditioning 6.1

6.1.6. Contamination Witness Plate..... 6.2

6.1.7. Decontamination Features / Heaters 6.2

6.1.8. Instrument Bagging 6.2

6.2. FAILURE PROPAGATION THROUGH THE INTERFACES 6.3

6.3. SAFETY REGULATIONS 6.4

This document has been elaborated by MATRA MARCONI SPACE along with DORNIER.

1. GENERAL INFORMATION

BLANK

1.1. GENERAL

1.1.1. Purpose of the Document

This document is the SARR Instrument Interface Control Document. It deals with the interface definition between the instrument and the METOP satellites.

The ICD document forms the unique formal definition on engineering, ground and flight operations for the METOP programme, specifying the binding requirements between ESA and the Instrument Supplier. It is configuration controlled by the METOP project team and formally signed off by ESA, the Instrument Supplier and the METOP prime contractor.

As a single point control of the technical interfaces, the ICD :

- Defines the technical resources allocated to the instrument
- Defines the detailed mechanical, thermal and electrical interfaces between the instrument and the satellite.
- Defines the design verification programme Which shall be implemented to demonstrate compliance with the METOP / SARR interface requirements.
- Defines the detailed mechanical, electrical and protocol interfaces between the instrument ground support equipment and the METOP PLM ground support equipment.
- Defines the operational interface applicable during ground, launch and flight phases.

The objective of the ICD is to ensure that :

- The instrument is designed, built and verified within the constraints imposed by the overall payload complement, satellite and launch vehicle,
- The satellite Prime Contractor is able to design, build and verify the satellite in such a manner that all instruments can be successfully integrated into the system,
- The spacecraft system can be successfully launched and operated to achieve the mission objectives of the METOP programme.

1.12. Documentation

In cases of conflict between the following applicable documents and the present ICD, the agreement or definition in this SARR ICD shall govern

1.1.2.1. Applicable Documentation

AD 1. METOP Product Assurance Requirements for NOM Instruments
Ref. MO-RS-ESA-PA-065

AD2. Void

AD3. Satellite Thermal Model Requirement Specification, Ref. MO-RS-MMT-SY-0009.

AD4. Electromagnetic Interference Characteristics, Measurement of, MIL-STD-462C.

AD5. SARR Instrument Thermal Interface Mathematical Model Report, Ref. SAI-RPT-095.

AD6. SARR Instrument Thermal Interface Mathematical Model (Ref. LTS/0200/BB).

AD7.. Repeater Automated Test System (RATS) User Manual, Ref. DND-SARR9605.

AD8. Repeater Automated Test System (RATS) System Manual; Ref. DND-SARR9604.

AD9. SARR Unpacking /Packing and Handling Procedures, Ref. DND-2588451 (TBC_{SARR}).

AD10. Storage Plan, Ref. DND-SARR-9801.

AD11. Repeater Automated Test System (RATS) Technical Description, Ref. PM-SARSAT 2793-34

AD12. Incoming Inspection Procedure for SARR for Post NOAA-M Satellites, Ref. SARSAT-R-09

1.1.2.2. Reference Documentation

RD1. SARR General Description,
no reference, dated February 1995.

RD2. ATN-K,L,M General Instrument Interface Specification
Ref. IS-3267415, Rev. C, &ted October 1991

RD3. Unique Instrument Interface Specification for SARR
Ref. IS-2295546, Rev. G, dated March 1993

RD4. Void

RD5. Void

RD6. Single Space Segment - Search & Rescue, DCS System Specification,
Ref. MO-RS-ESA-IN-0087

1.13. Acronym List

AD	Applicable Document
A-DCS	Advanced Data Collection System
AGC	Automatic Gain Control
AIT	Assembly, Integration & Test
AIV	Assembly, Integration & Verification
AMSU-Al	Advanced Microwave Sounding Unit 1
AMSU-A2	Advanced Microwave Sounding Unit 2
ARGOS	Meteorological Data Collection and Location System
ASCAT	Advanced Wind Scatterometer
AVHRR/3	Advanced Very High Resolution Radiometer
BOL	Beginning of Life

C&C	Command & Control
CAM	Coarse Acquisition Mode
CCU	Central Computer Unit (SVM)
CFI	Customer Furnished Instrument
CRA	Combined Receive Antenna (A-DCS, SARR, SARP-3)
DBU	Digital Bus Unit
DC	Direct Current
DSPG	Distributed Single Point Grounding
DTA	DCS Transmit Antenna
EGSE	Electrical Ground Support Equipment
ELT	Emergency Locator Transmitters
EMC	Electromagnetic Compatibility
EMI	Electromagnetic Interference
EOL	End of Life
EPIRB	Emergency Position Indicating Radio Beacons
FAM	Fine Acquisition Mode
FEM	Finite Element Model
FMECA	Failure Modes, Effects and Criticality Analysis
FMU	Formatting and Multiplexing Unit
FOV	Field of View
FPM	Fine Pointing Mode
Gbit	Gigabits
GDO	Gunn Diode Oscillator
GNSS	Globai Navigation Satellite System
GOME-2	Global Ozone Monitoring Experiment
GRAS	GNSS Receiver for Atmospheric Sounding
GSE	Ground Support Equipment
H/W	Hardware
HIRS/4	High Resolution Infra-Red Radiation Sounder
HK	House Keeping
HRPT	High Resolution Picture Transmission
I/F	Interface
IASI	Infra-red Atmospheric Sounding Interferometer
ICD	Interface Control Document
ICU	Instrument Control Unit
IST	Integration System Test
kbps	kilobits per second
KLM	NOAA K, L, M series of satellites

LEOP	Launch and Early Orbit Phase
LRPT	Low Resolution Picture Transmission
LUT	Local User Terminals
Mbps	Megabits per Second
MCC	Rescue Mission Control Centre
MCMD	Macro command
MGSE	Mechanical Ground Support Equipment
MI-IS	Microwave Humidity Sounder
MIL	Military (standard)
N/A	Not Applicable
NIU	NOAA Instrument Interface Unit
OBDH	Onboard Data Handling System
OCM	Orbit Control Mode
OCOE	Over Check-Out Equipment
OMI	Ozone Monitoring Instrument
P/F	Platform
P/L	Payload
PA	Product Assurance
PCU	Power Conversion Unit
PLM	Payload Module
PMC	Payload Module Computer
PTC	Power; Telemetry and Command
RD	Reference Document
RF	Radio Frequency
RFC	Radio Frequency Compatibility
RFF	RF Filter
rms	rootmeansquare
rpm	round revolutions per minute
RRM	Rate Reduction Mode
Rx	Receive; Receiver
S&R	Search and Rescue
S/C	Spacecraft
S/L	Satellite
S/S	Subsystem
S/W	Software
SARP-3	'Search and Rescue Processor

SARR	Search and Rescue Repeater
SEM-2	Space Environmental Monitor
SLA	S&R L-band Tx Antenna
SVM	Service Module
TB/TV	Thermal Balance/ Thermal Vacuum
TBC	To be confirmed
TBD	To be defined
TC	Telecommaud
TCU	Thermal Control unit
TM	Telemetry
TT&C	Tracking, Telemeuy, and Telecommand (LEOP, Emergency, and Stand-by)
Tx	Transmit, Transmitter.
YSM	Yaw Steering Mode

1.2. INSTRUMENT PRESENTATION

1.2.1. General

(For information only)

Instrument Name	SARR Search and Rescue Repeater
Classification	Distress beacon repeater

SARR, along with the SARP-3 instrument and the METOP provided RF hardware (Accommodation Hardware, including the Combined Receive Antenna - CRA - and the S&R L-Band Transmit Antenna - SLA), forms the Search and Rescue (S&R) system space segment.

The Search and Rescue Repeater receives and downlinks emergency signals from downed aircraft and ships. In addition, it provides a down link for data received by the Search and Rescue Processor (SARP-3). The SARR receives distress beacon signals on three separate frequencies, translates them to L-band and retransmits them to Local User Terminals (LUTs) on the ground. These terminals process the signals, determine location of the beacons, and forward this information to a Rescue Mission Control Centre (MCC).

1.2.2. Scientific Objectives

(For information only)

The SARSAT space segment implemented for the METOP satellite consists of antennas / diplexer / filters, a Search and Rescue Repeater (SARR) and a Search and Rescue Processor (SARP-3). as illustrated in Rgure 1.2.2/1.

The SARR subsystem consists of a receiver assembly and a transmitter assembly. The receiver assembly receives the Emergency Locator Transmitters (aircraft) and the Emergency Position Indicating Radio Beacons (ships) (ELT / EPIRB) signals on 121.5. 243.0 and 404.05 MHz. Each receiver is a dual conversion unit with automatic gain control (AGC). It down converts its received energy to selected intermediate frequency bands. These bands are then summed with 2.4 kbps data from the SARP-3 and phase-modulates the 1544.5 MHz downlink carrier frequency. The modulation of each band is independently adjustable to account for any long-term changes either in the operational procedure or the system noise environment

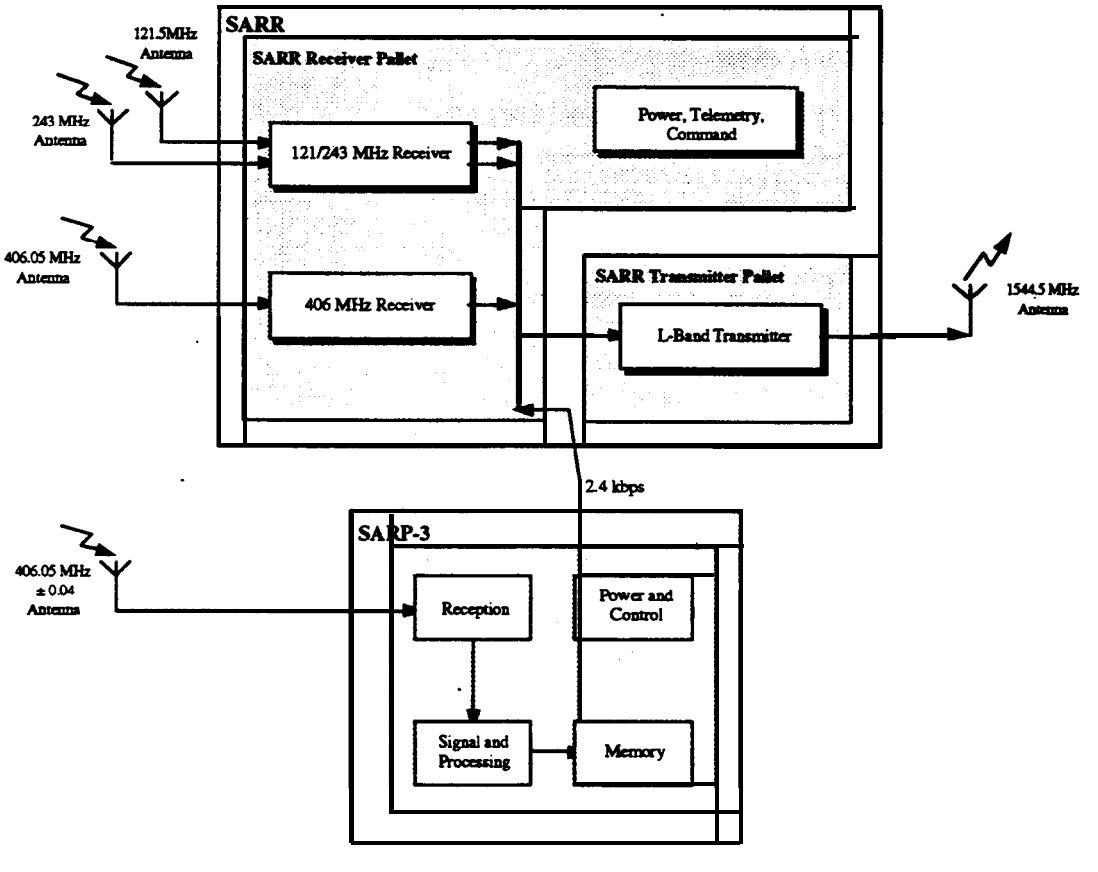

Figure ***1.2.2/1*** : *SARSAT* ***Instrument*** *Package*

1.23. Functional Description

The SARR Functional Diagram is illustrated in 1.2.3/1. The SARR is fully redundant and consists of two assemblies : a transmitter arid a receiver.

133.1. Search And Rescue Repeater (Receiver)

The receiver pallet contains three pairs of receivers. These receivers obtain their signals from the METOP provided VHF antenna system. The receivers translate the received signals to' the required intermediate frequencies and route the signals to the transmitters.

The SARR receivers have the following performance characteristics.

Centre Frequency	121.50 MHz	243.00 MHz	-406.05 MHz
Bandwidth	± 20 kHz	± 30 kHz	± 80.0 kHz
Antenna Polarization (ref.)	RHCP	RHCP	RHCP

The SARR receiver pallet contains also two power, telemetry and command units, and various discrete components.

The PT&C units of the SARR Receiver Pallet accept a digital input from the SARP-3 at a rate of 2400 bps.

1.2.3.2. Search And Rescue Repeater (Transmitter)

The signals from the three receivers and the SAW-3 are summed by the transmitter and the resulting signal is used to phase modulate the L-Baud carrier. The SARR L-Band antenna system is a METOP furnished equipment

The SARR transmitter pallet contains hvo transmitters and various discrete components.

Its performance characteristics are the following :

Carrier Frequency : 1544.5 MHz
Bandwidth (RF): ± 400 kHz
Antenna Polarisation (ref.) : LHCP

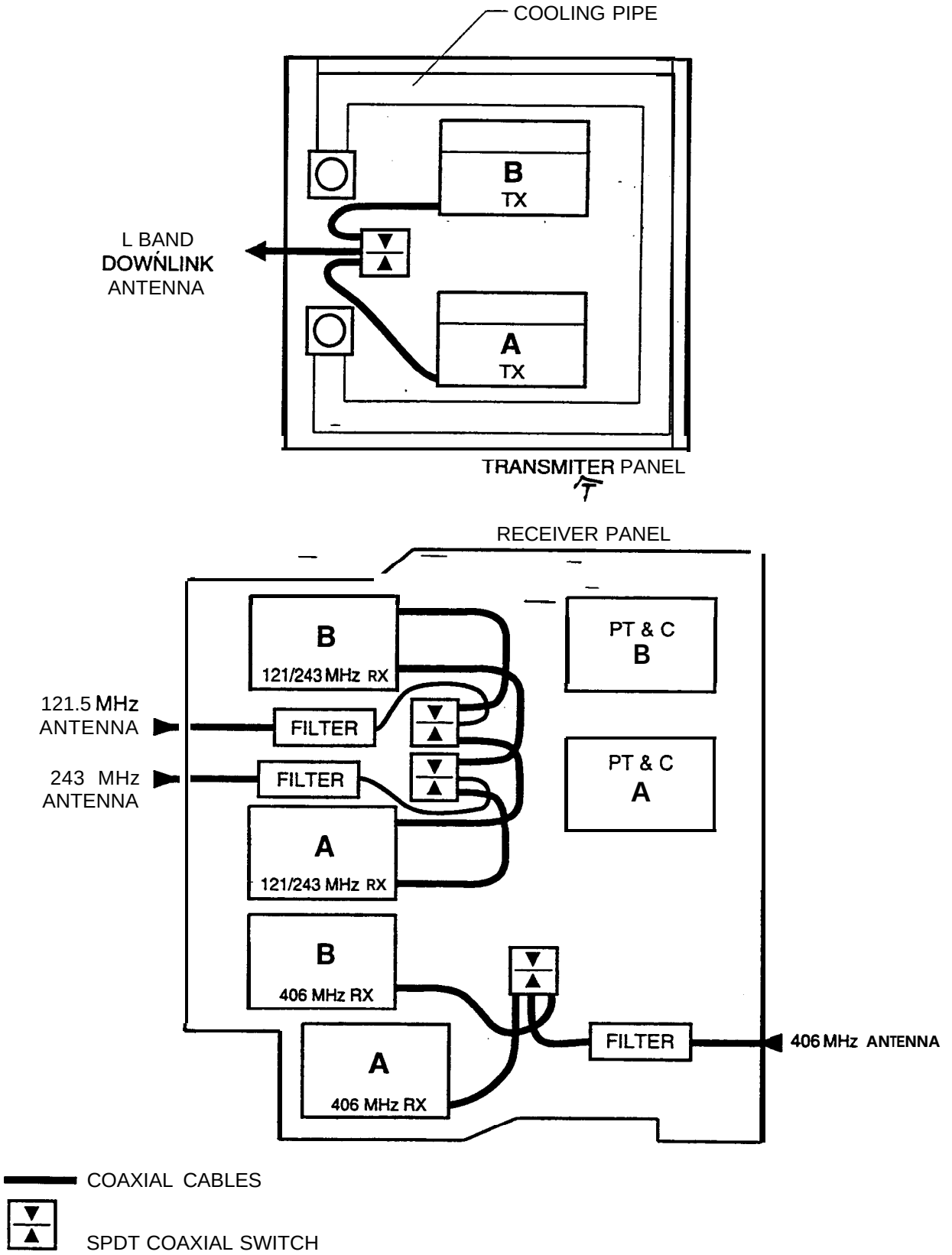

*Figure **1.2.3/1 :** SARR Functional Diagram (IL?)*
***Electrical** (Non RF) Connections*

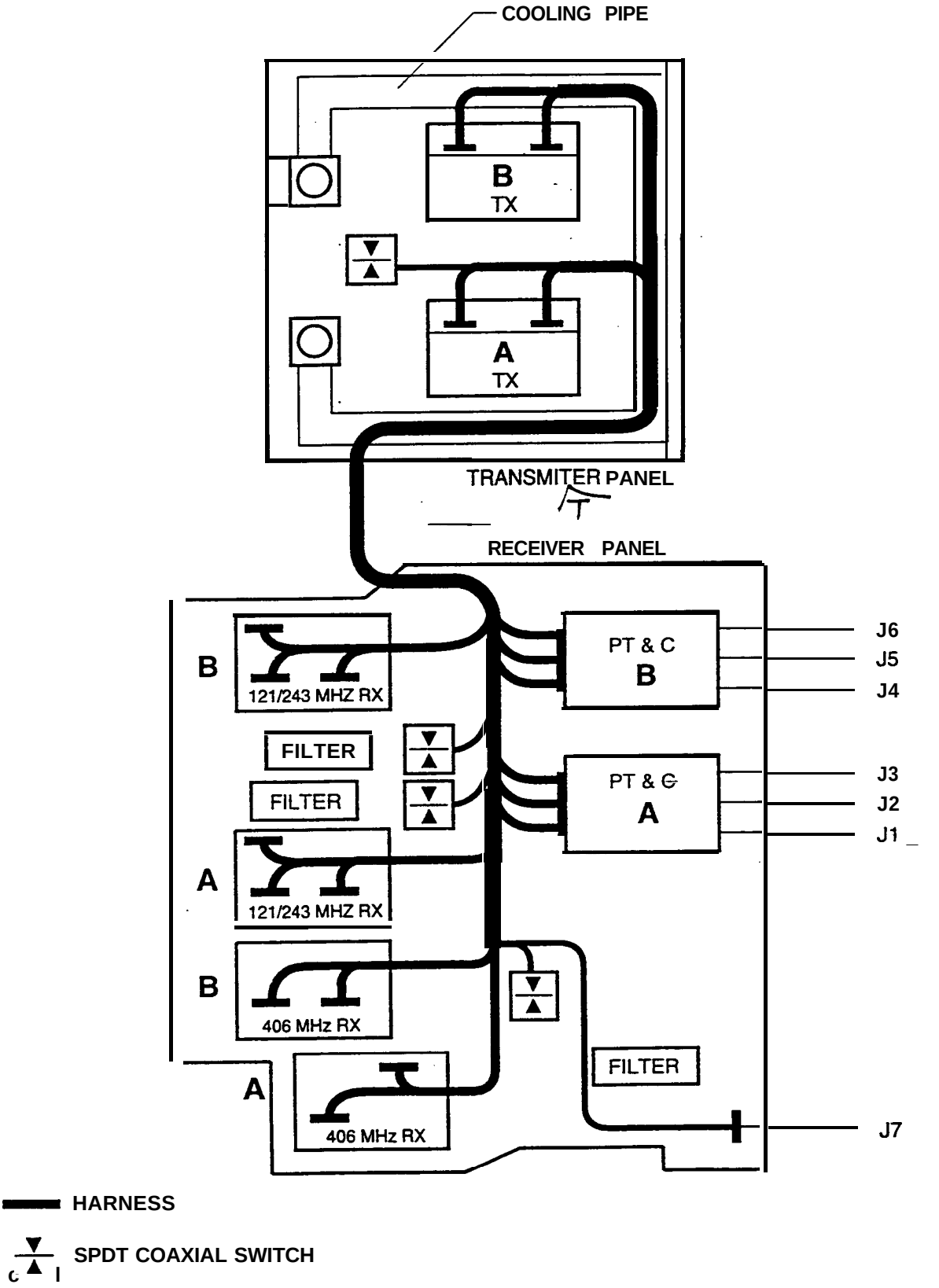

Figure 1.2.3/1 : SARR Functional Diagram (2/2)
(RF Connections)

1.3. METOP SYSTEM OVERVIEW

13.1. Spacecraft Architecture Concept

(For information only)

The METOP mission consists of a geocentric, three-axis stabilized spacecraft placed into a Sun-synchronous orbit around the Earth. It is built around a primary structure consisting of :

- a service module (SVM), which provides all standard service elements
- au upper payload module (PLM) that accommodates the different instruments and corresponding electronic equipments.

The service module is a box-shaped structure, that interfaces with the launch vehicle at the bottom and with the payload module at the top.

The payload module provides the main supporting structure and external panels on which are mounted the payload instruments. It also provides internal accommodation for both the payload support systems and the instrument electronic units.

The METOP satellite in-orbit configuration is illustrated in Figures 1.3.1/1. The internal PLM lay-out is illustrated in Figure 1.3.1/2.

The SARR interfaces with the following PLM units :

- the NOAA Instrument Interface Unit (NIU) provides all command aud control interfaces to the SARR. i.e. configuration and mode switching (commands), command verification, housekeeping telemetry acquisition, and clock and time management.
- the Power Conversion Unit (PCU) provides the SARR with the regulated buses.
- the Thermal Control Unit (TCU) provides heater power supply for the thermal control of the pallets.

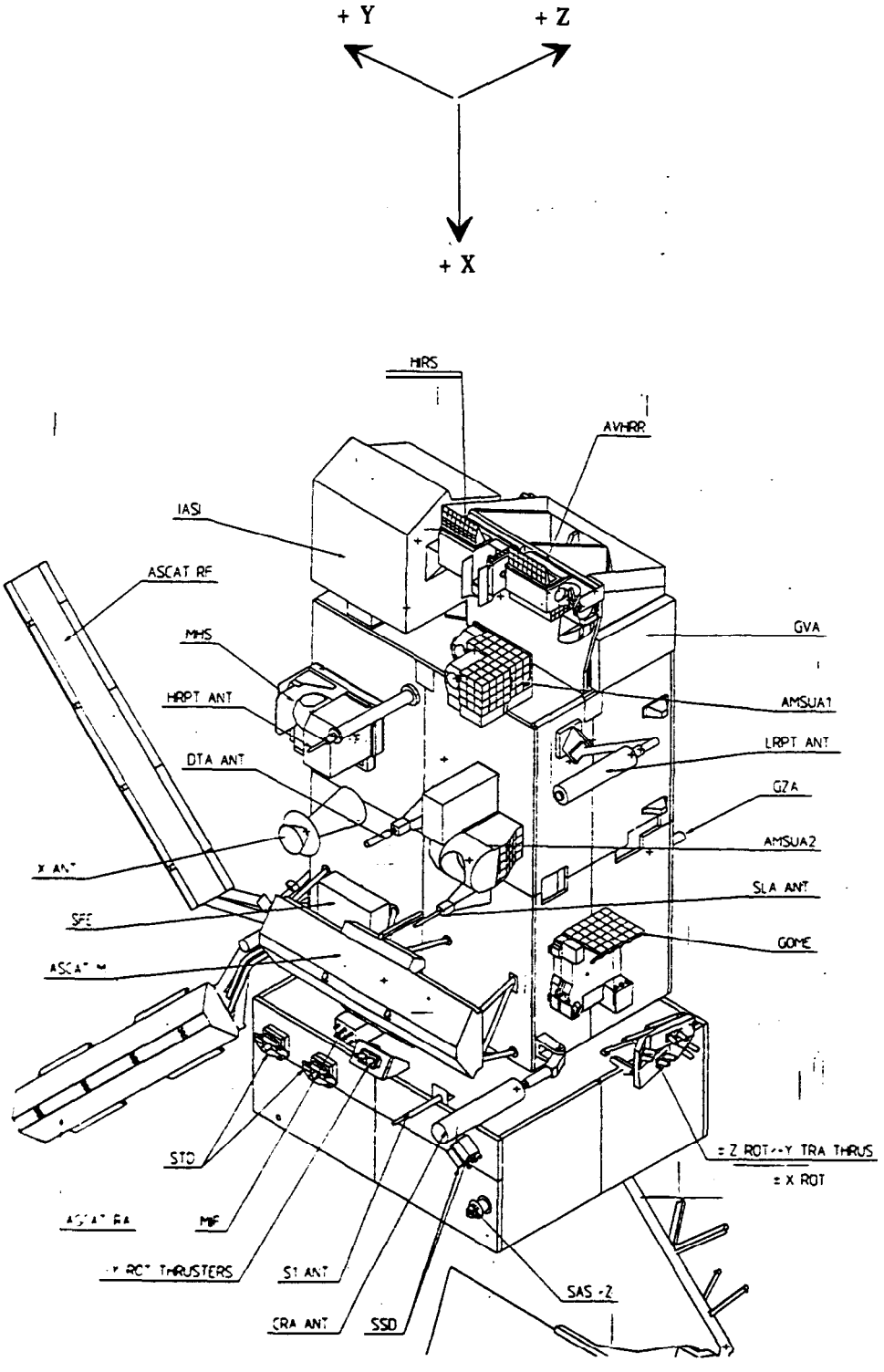

WARNING: MAY BE SUBJECT TO CHANGE

*Figure **1.3.1/1** : **METOP** Satellite Overall **Configuration** (For **Information** Only)*

TBD MET

WARNING : MAY BE SUBJECT TO CHANGE

Figure 1.3.1/2 : Internal Lay-Out (For Information Only)

1.33. Instrument Reference Frame

The following is a requirement for the definition of the instrument reference frame. The frame specific to the SARR is defined in § 2.1.3.2.

The instrument shall have a right handed orthogonal co-ordinate reference system (X_{SARR}, Y_{SARR}, Z_{SARR}) F_{SARR} and it shall be defined such that :

- the origin shall be physically located on an accessible, identifiable instrument exterior feature (e.g. the centre of one mounting hole, at the unit baseplate level)
- the X, Y instrument axes define the plane that contains the unit mounting feet.
- the Z axis is normal to this datum plane.

These axes shall be referred to on all drawings and any finite element description.

13.3. Orbital Parameters

133.1. Reference Orbit

METOP will be placed into the following reference orbit :

- Type :	Sun-synchronous
- Semi-major axis :	7197.939 km
- Repeat Cycle :	5 days (14 + 1/5 orbits per day)
- Local Solar Time :	09:30 AU descending node

133.2. Drift Orbit

METOP- 1 will achieve the reference orbit after a 6-month (TBC_{MET}) drifting phase (dual launch), from an initial polar orbit (close to the Sun-synchronous one) with a local solar time around 10:00 AM. descending node.

METOP-2 will be directly launched into the reference orbit

13.4. Satellite Mission Phases and Operations

1.3.4.1. Mission Phases

During its lifetime, the satellite is operated through the following mission phases :

- **Launch Phase**

  The proper launch phase begins at the instant of switching the power subsystem to on-board batteries before lift-off and ends at satellite/launch vehicle separation.

- **Acquisition Phase**

  This phase starts at the end of the launch phase and ends once the satellite has acquired its operational attitude and orbit with its appendages deployed_ An initial acquisition sequence leading to a system secured state, is followed by a final acquisition' period.

- Commissioning **Phase**

  This phase starts once the attitude and orbit have been acquired and covers the time that subsystems and instruments are checked out. It ends when the payload is operational for the nominal orbit. For METOP-1, it starts when the satellite is still drifting to achieve the nominal local solar time of 09:30.

- **Routine / Operational Phase**

  This phase starts at the end of the commissioning phase and covers the time when the instruments are operational and the times when orbit maintenance manoeuvres are puformed.

13.42. Satellite Operational Modes

(For information only)

This section describes the satellite operational modes.

1.3.4.2.1. Nominal Operational Mode

The nominal operational mode for METOP SVM is the Yaw Steering Mode (YSM[1]). During this mode, the PLM is in its Operable Mode : the instruments can be nominally operated through their different modes.

1.3.4.2.2. Orbit Control Modes

Orbit control manoeuvres for altitude maintenance or inclination maintenance are performed in SVM Orbit Control Mode (OCM) or Fine Control Mode (FCM).

---

1 During the Yaw Steering Mode (YSM), the satellite Z axis (yaw) is' steered according to sinusoidal function over the orbit with an amplitude of about 4 deg.

During these modes, the PLM is still operable and the instrument nominal operations are not stopped. Attitude errors may have some impact on antenna Earth coverage during these modes. During the initial orbit corrections, the PLM and the instrument status are in LEOP / Off Modes.

1.3.4.2.3. Acquisition Modes

The acquisition modes encompass all actions leading to a stabilized Earth attitude, including deployment. of all major appendages.

The corresponding SVM modes are the Rate Reduction Mode (RRM), the Coarse Acquisition Mode (CAM), the Fme Acquisition Modes (FAM1, FAM2 andFAM3) and the Fine Pointing Mode (FPM).

During these modes, the PLM is in the Lift-Off Mode and then LEOP Mode. In general, all instruments are switched off.

1.3.4.2.4. Contingency Cases

In the event of detection of a satellite failure,, several back up modes exist at PLM and / or SVM levels.

PLM Failure Cases

For failure at PLM level, the corresponding PLM modes are the PLM Stand-By Mode, the PLM Fix Mode and the PLM Safe Mode, depending on the failure. All instruments are switched off.

The SVM is not affected.

SVM Failure Cases

For failure at SVM level, the PLM is forced to PLM Stand-By Mode, PLM Fix Mode or PLM Safe Mode, depending on the failure, and all instruments are switched off.

The SVM enters several modes that lead to a stabilized Earth pointing attitude. From an operational point of view. those modes are similar to the very first attitude acquisition that follows the separation from the launch vehicle, but with deployed appendages.

1.3.4.2.5. Safe Mode (Sun Pointing)

In addition to the previous back-up modes, an ultimate safety level is implemented on METOP. This so-called Safe Mode performs the minimal functions for satellite survival by maintaining a Sun-pointed attitude. During the Safe Mode, the PLM is in the PLM Safe Mode and all instruments are switched off.

1.4. INSTRUMENT OPERATIONAL MODES

1.4.1. Operational Constraints

To assure proper in-orbit operations of the SARR, certain practices are to be observed during the mission phases (see § 1.3.4.1.) : **the SARR may not survive any sequence** of comma& in any combination and rate. These are :

1) The SARR can be operated within the constraints herein defined, at any time during the drift orbit.

2) Any sequence shall avoid switching of coaxial relay switches when the switch inputs are powered. This is taken into account with the in-orbit operation sequences described in § 1.5.

3) In case of PLM failure, the clock / signal and power (10 & 28 V) may not be available at the instrument interfaces for a maximum duration of 36 hours.

4) In case of power interrupt, the latching relays in the SARR will not change their states. Care must be taken on SARR configuration before restoring power to SARR and switch-on sequence of § 1.5.3. shah be followed.

Redundancy

The SARR command structure prevents all redundant units in the SARR from being powered at once (e. g. no hot switching of the SARR transmitter RF output is allowed). The command structure assures thatatmostonememberofeachredundam pair of units is powered. However the 28 V input power to the SARR Receiver Pallet (PT&C) can be hot switched.

The command and signal routing structure allows cross-strapping of the "A" receivers with "B" transmitter and the "B" receivers with the "A" transmitter

It disallows :

1.) a mixed set of receivers from "A" and "B".
2.) a cross-strapping between PTC and Receiver
3.) a cross-strapping of the SARP-3 data.

It allows any of the three following units to be powered on or off independent of the power on / off status of the other two :

- either transmitter
- either 406.05 MHz receiver
- the unit comprising the 121.5 and 243 MHz receivers, with the same letter designation as the 406.05 MHz above

As a consequence, losing the 121.5 receiver will result in switching all receivers and PT&C to the other side, even though the other units on the original side are fully functional.

1.4.2. Instrument Mode Overview

1.4.2.1. SARR Off Mode

During the SARR Off Mode, the SARR is unpowered. No service (telemetry, monitoring...) will be performed by the METOP satellite.

This Off Mode for SARR is used :

- during the METOP launch and acquisition phases.
- during the METOP contingency cases (see § 1.3.4.2.4.).
- during the METOP safe mode (see § 1.3.4.2.5.).

The Switched TLM bus is available at the instrument interfaces only during the PLM Stand-By and Operable modes. The temperatures will bemonitored only during these PLM modes.

All interface power buses and signals shall be available at the interfaces of the SARR to exit this mode.

1.4.2.2. SARR On Mode

This mode is defined as the normal operating mode of the SARR, with the instrument providing nominal receiver / transmitter functionalities.

With the switch-on sequence the SARR redundancy will be selected. The following modes of operations are available :

- AA: A side receivers and PT&C
  A side transmitter
- AB: A side receivers and PT&C
  B side transmitter
- BB : B side receivers and PT&C
  B side transmitter
- BA : B side receivers and PT&C
  A side transmitter

For SARR functions and parameter changes during the On Mode, see § 1.5.4.

1.43. Cross Reference Between Instrument and PLM Modes

Phases	PLM	SARR	Comments
Launch and Acquisition Phases	Lift-Off Mode LEOP Mode	Off Mode	
Pre-Operational Phase	Stand-By	Off Mode	
Operational Phase	Operable	Any	
Orbit Control Manoeuvres	operable	Any	
	Stand-By	Off Mode	
Contingency Cases	Stand-By Fix Safe	Off Mode	

1.5. INSTRUMENT LAUNCH AND IN-ORBIT OPERATIONS

15.1. General

Instrument operational constraints are presented in § 1.4.1.

The minimum time between consecutive commands is specified in § 3.2.2., except as noted below.

SARR telecommands are described in § 3.2.2.

The acknowledgement of the commands by the instrument is done with Digital B telemetry points as described in § 3.2.3.2 and § 3.2.4. When no Digital B telemetry point is available, the acknowledgement is done with the instrument Analog Housekeepii telemetry on the ground.

Instrument operations during tests are described in § 5.

1.5.2. Instrument Sequences to SARR Off Mode

15.2.1. Nominal Sequence to Off Mode

The instrument switch-off sequence from any mode into Off Mode shall be as following :

- All level discrete commands to 0
- Switch-off of SARR

The complete procedure is the following :

1) SARR Level Control A Bit 0 to 0
2) SARR Level Control A Bit 1 to 0
3) SARR Level Conuol A Bit 2 to 0
4) SARR Level Control A Bit 3 to 0
5) SARR Level Conuol A Bit 4 to 0
6) SARR Bus A Destination Bit 5 to 0
7) SARR Bus A Destination Bit 6 to 0
8) SARR AGC Enable / Disable A to 0
9) SARR Tx A Enable / Disable to 0
10) SARR Execute Level Control A
11) Wait 1 second
12) SARR Level Control B Bit 0 to 0
13) SARR Level Control B Bit 1 to 0
14) SARR Level Control B Bit 2 to 0
15) SARR Level Control B Bit 3 to 0
16) SARR Level Control B Bit 4 to 0
17) SARR Bus B Destination Bit 5 to 0
18) SARR Bus B Destination Bit 6 to 0

19) SARR AGC Enable/ Disable B to 0
20) SARR Tx B Enable/Disable to 0
21) SARR Execute Level Control B
22) Wait 1 second
23) PT&C A and Tx A OFF
24) PT&C B and Tx B OFF
25) Wait 4 seconds after the previous command.

1.5.2.2. Emergency Sequence to SARR Off Mode

In case of emergency (including depointing), the NIU shall issue the following command sequence to the instrument, which will switch down the SARR to Off Mode :

1) PT&C A and Tx A OFF
2) PT&C B and Tx B OFF
3) Wait 4 seconds after the previous command

This emergency switch-off sequence shall be terminated within 50 s.

Removal of the main power bus during SARR On Mode is another way to trigger the SARR Off Mode. However this will result in an m&fined status of SARR internal switches (latch relays). The switch-on sequence of §1.5.3. will cope with such a situation and allow a safe switch-on of the instrument.

1.53. Instrument Sequences to SARR On Mode

153.1. To SARR On Mode With A Side Receivers & A Side Transmitter

The SARR instrument switch-on sequence from Off Mode into On Mode shall be as following :

- steps 1...4 : Instrument initialization
- Steps 5 and 6 : Tx A switched on and connected to output
- steps 7...9: Rx A switched on (convert& and receivers)

The complete procedure is the following :

1) SARR PTC A and Tx A OFF
2) SARR PTC B and Tx B OFF
3) SARR Tx A Enable / Disable to 0 (Off)
4) SARR Tx B Enable / Disable to 0 (Off)
5) SARR Tx A Enable / Disable to 1 (On)
6) SARR Tx A On - Tx B OFF
7) SARR PTC A ON and PTC B OFF
8) SARR 121 / 243 A ON - 121 / 243 B OFF
9) SARR 406 A ON - 406 B OFF
10) Wait 4 seconds after the previous command

153.2. To SARR On Mode With A Side Receivers & B Side Transmitter

The sequence is the same as the one from § 1.5.3.1. with change to A / B where desired, except for first two commands :

1) SARR PTC A and Tx A OFF
2) SARR PTC B and Tx B OFF
3) SARR Tx A Enable / Disable to 0 (Off)
4) SARR Tx B Enable / Disable to 0 (Off)
5) SARR Tx B Enable / Disable to 1 (On)
6) SARR Tx B On - Tx A OFF
7) SARR PTC A ON and PTC B OFF
8) SARR 121 / 243 A ON - 121 / 243 B OFF
9) SARR 406 A ON - 406 B OFF
10) Wait 4 seconds after the previous command

1533. To SARR On Mode With B Side Receivers & B Side Transmitter

The sequence is the same as the one from § 1.5.3.1. with change to A / B where desired, except for first two commands :

1) SARR PTC A and Tx A OFF
2) SARR PTC B and Tx B OFF

3) SARR Tx A Enable / Disable to 0 (Off)
4) SARR Tx B Enable / Disable to 0 (Off)
5) SARR Tx B Enable / Disable to 1 (On)
6) SARR Tx B On - Tx A OFF
7) SARR PTC B ON and PTC A OFF
8) SARR 121 / 243 B ON - 121 / 243 A OFF
9) SARR 406 B ON - 406 A OFF
10) Wait 4 seconds after the previous command

1.5.3.4. To SARR On Mode With B Side Receivers & A Side Transmitter

The sequence is the same as the one from § 1.5.3.1. with change to A / B where desired, except for first two commands :

1) SARR PTC A and Tx A OFF
2) SARR PTC B and Tx B OFF
3) SARR Tx A Enable / Disable to 0 (Off)
4) SARR Tx B Enable / Disable to 0 (Off)
5) SARR Tx A Enable / Disable to 1 (On)
6) SARR Tx A On - Tx B OFF
7) SARR PTC B ON and PTC A OFF
8) SARR 121 / 243 B ON - 121 / 243 A OFF
9) SARR 406 B ON - 406 A OFF
10) Wait 4 seconds after the previous command

15.4. Instrument Sequences During SARR On Mode : SARR In-Orbit Adjustments

The initial setting (default) at switch-on is -5 dB for the 121.9243 attenuator, -10 dB for the 406 attenuator, and -5 dB for the PDS attenuator.

To optimize the system after initial in-orbit tests, a capability to adjust the power level of each converted frequency band prior to modulation on the down link is provided.

This is done according to the following (see Figure 1.5.4/1):

- First, select the receiver to be tuned : the 121.5 MHz receiver, or the 243.0 MHz receiver, or the 406.0 receiver, or the PDS channel (SARP-3) data "receiver". The related procedures are described in §1.5.4.1. ("Bits 5-6").
- Then, code the attenuation level to be applied disable the automatic gain control and authorize the set attenuation level (or code the attenuationlevel to be removed, enable the automatic gain control and disable the set attenuation level). The related procedures are described in §1.5.4.2. ("Bits 0-4").
- Lastly, execute the commands. The related procedures are described in § 1.5.4.3.

Other commands are possible to connect / disconnect one receiver from the transmitter (see § 1.5.4.4.)

The following procedures are written for the Side A unit only. For the Side B. change "A" to "B" where desired.

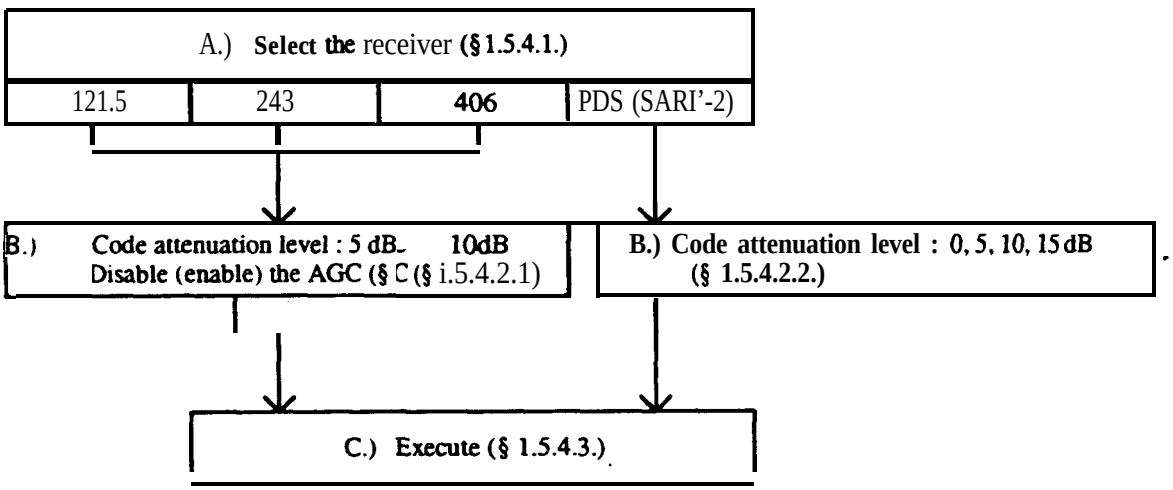

Figure 1.5.4/1 : In-Orbit Adjustments of the SARR Attenuation Gains

15.4.1. Receiver Selection (Side A)

1215 MHz A Receiver Selection (Side A)

1) SARR Bus A Destination Bit 5 to 0
2) SARR Bus A Destination Bit 6 to 0

243.0 MHz **A Receiver Selection (Side A)**

1) SARR Bus A Destination Bit 5 to 0
2) SARR Bus A Destination Bit 6 to 1

406.06 MHz A Receiver Selection (Side A)

1) SARR Bus A Destination Bit 5 to 1
2) SARR Bus A Destination Bit 6 to 0

SARP-3 **Data Attenuators in A PTC Selection (Side A)**

1) SARR Bus A Destination Bit 5 to 1
2) SARR Bus A Destination Bit 6 to 1

1.5.4.2. Attenuator Settings on Receiver and Enable / Disable AGC (Side A)

1.5.4.2.1. 121.5, 243 and 406 MHz Receivers

Attenuation of 5 dB (Side A)

This is only valid for 121.5 and 243 MHz receivers (TBC_{SARR}).

1) SARR Level Control A Bit 0 to 0
2) SARR Level Control A Bit 1 to 1
3) SARR Level Control A Bit 2 to 0
4) SARR Level Control A Bit 3 to 1
5) SARR Level Control A Bit 4 to 1
6) SARR AGC Enable / Disable A to 0

Removal of **Attenuation of 5 dB (Side A)**

This is only valid for 121.5 and 243 MHz receivers (TBC_{SARR}).

1) SARR Level Control A Bit 0 to 0
2) SARR Level Control A Bit 1 to 1
3) SARR Level Control A Bit 2 to 0
4) SARR Level Control A Bit 3 to 1
5) SARR Level Control A Bit 4 to 1
6) SARR AGC Enable / Disable A to 1

Attenuation of 10 dB (Side A)

This is only valid for **406 MHz** receiver (TBC_{SARR}).

1) SARR Level Control A Bit 0 to 1
2) SARR Level Control A Bit 1 to 0
3) SARR Level Control A Bit 2 to 1

4) SARR Level Control A Bit 3 to 0
5) SARR AGC Enable / Disable A to 0

Removal of Attenuation of 10 dB (Side A)

This is only valid for 406 MHz receiver (TBC_{SARR}).

1) SARR Level Control A Bit 0 to 1
2) SARR Level Control A Bit 1 to 0
3) SARR Level Control A Bit 2 to 1
4) SARR Level Control A Bit 3 to 0
5) SARR AGC Enable / Disable A to 1

1.5.4.2.2. PDS (SARP-3) Data Attenuators

PDS (SARP-3) Data Attenuators to 0 dB

1) SARR Level Control A Bit 0 to 0
2) SARR Level Control A Bit 1 to 0

PDS (SARP-3) Data Attenuators to 5 dB

1) SARR Level Control A Bit 0 to 1
2) SARR Level Control A Bit 1 to 0

PDS (SARP-3) Data Attenuators to 10 dB

1) SARR Level Control A Bit 0 to 0
2) SARR Level Control A Bit 1 to 1

PDS (SARP-3) Data Attenuators to 15 dB

1) SARR Level Control A Bit 0 to 1
2) SARR Level Control A Bit 1 to 1

15.43. Execute Command

1) SARR Execute Level Control A
2) Wait 1 second

154.4. Disconnect 121.5 or 243 or 406 Receiver Outputs from Transmitter

Disconnect 1215 MHz Receiver Output from Transmitter

1) SARR Bus A Destination Bit 5 to 0
2) SARR Bus A Destination Bit 6 to- 0

3) SARR Level Control A Bit 4 to 0
4) SARR Execute Level Control A
5) Wait 1 second

Disconnect 243.0 MHz **Receiver Output from Transmitter**

1) SARR Bus A Destination Bit 5 to 0
2) **SARR** Bus A Destination Bit 6 to 1
3) SARR Level Control A Bit 4 to 0
4) SARR **Execute** Level Control A
5) Wait 1 second

Disconnect 406.0 MHz Receiver Output from Transmitter

1) **SARR 406 A Off**

Re-Connect or Connect 406.0 MHz Receiver Output from Transmitter

The 406.0 MHz receiver can be reconnected if required without switching down the whole **instrument, by applying:**

1) SARR 406 A Receiver On - 406 B Off

2. MECHANICAL AND THERMAL INTERFACE DESCRIPTION

BLANK

2.1. GENERAL

2.1.1. Interface Definition

The interface definition for the instrument is the following :

Instrument	Satellite
Mechanical	
Instrument pre-integrated, comprising a Receiver Pallet and a Transmitter Pallet. Interconnecting Pallet to Pallet Harness Ground strap	Attachment bolts Head Bolt Washers Adjustment Shims Interconnecting cable restraints (if necessary)
Thermal	
Unit thermal control hardware for the Receiver Provision for and integration of heaters and thermistor on the Receiver pallet_	Unit thermal control hardware / software for the Receiver and Transmitter Pallets including : - Operational Mode : heaters and temperamre sensors - Survival Mode : heaters and thermostats.

Note: all RF devices (including receiving and transmitting antenna systems, transmission line elements external to the SARR connectors) and the harness between SARR and SARP-3 are under the responsibility of METOP.

2.1.2. Module / Unit Identification

The Part Number and Identification Code of the SARR instrument are :

SARR Transmitter Pallet

1) Equipment Name :	Search and Rescue Repeater - Transmitter Panel
2) Purchase Order Or Contract Number :	W8474-4-EB55/01-QF
3) Manufacturer Name :	Property of the Canadian Department of National Defence
4) Part No :	713342-551, S/N XXX Part of SARSAT Repeater, P/N 710805-551, S/N XXX
5) ID Code :	N/A
6) METOP ID Code	N/A

SARR Receiver Pallet

1) Equipment Name :	Search and Rescue Repeater - Receiver Panel
2) Purchase Order Or Contract Number	W8474-4-EB55/01-QF
3) Manufacturer Name :	Property of the Canadian Department of National Defence
4) Part No :	P/N 710806-551, S/N XXX Part of SARSAT Repeater, P/N 710805-551, S/N XXX
5) ID Code :	N/A
6) METOP ID Code	N/ A

The location of the labels giving these Part Numbers and Identification Codes are defined in the Mechanical Interface Control Drawing (See § 2.1.4.).

2.13. Instrument Reference Frame

One instrument reference frame is defined per pallet.

The reference point for all mechanical and thermal data for each of the units are shown in the Interface Control Drawings (at the interface to the PLM structure, see § 2.1.4).

The SARR Receiver Instrument Interface Reference Frame, $F_{SARR\text{-}Rx}$, with the origin being at the reference point, is as defined in the Mechanical Interface Control Drawing (see § 2.1.4.).

The SARR Transmitter Instrument Interface Reference Frame, $F_{SARR\text{-}Tx}$, with the origin being at the reference point, is as defined in the Mechanical Interface Control Drawing (see § 2.1.4.).

2.1.4. Interface Drawings

2.1.4.1. Mechanical Interface Drawings

Pallet Definition

The SARR instrument configuration and mechanical interfaces are illustrated in the following interface drawings :

- SARR Receiver Pallet Interfaces, Ref. MMS-108626-D-TF-1/3-01
- SARR Receiver Pallet Connector Panel, Ref. MMS-108626-D-TF-2/3-01
- SARR Receiver Pallet Interface Screw, Ref. MMS-108626-D-TF-3/3-01
- SARR Transmitter Pallet Interfaces, Ref. MMS-108643-B-TF-1/3-01
- SARR Transmitter Pallet Comector Panel, Ref. MMS-108643-B-TF-2/3-01
- SARR Transmitter Pallet Interface Screw, Ref. MMS-108643-D-TF-3/3-01

For these drawings, all numerical values in brackets are for information only.

Grounding Straps

- Ground Strap (SARR Receiver), Ref. B-37957-4576048
- Ground Strap (SARR Transmitter), Ref. B-37957-4576074

For these drawings, all numerical values are in inches.

2.1.4.2. Thermal Interface Drawing

Not applicable for SARR.

2.1.43. Field of View Interface Drawing

Not applicable for SARR.

2.2. MECHANICAL INTERFACE DESCRIPTION

23.1. Physical Envelope

The SARR payload comprises two independently mounted pallets (pre-integrated pallets). The receiver and transmitter pallets are electrically connected to each other by an Instrument Supplier provided and installed interconnecting harness.

The separation distance between the pallets shall not exceed 125 mm.

The interconnecting harness places mounting constraints on the relative orientation of tbe two pallets. This harness shall be dematable on one end.

METOP will provide cable restraints for the section of the cable that is between the two pallets, in accordance with spacecraft assembly practices.

The pallets are mounted internally to the PLM. They can be accommodated in any direction on their (length x width) baseplate.

Tbe external unit dimensions, including studs, mounting lug and connector envelopes, shall be to a tolerance of ± 1 mm. These are :

SARR Configuration	Length	Width	Height
Receiver Pallet	458 mm	458 mm	166mm
Transmitter Pallet	350 mm	369 mm	122mm

The overall dimensions are defined without connector savers and minor exceptions for grounding straps and the ends of cooling tubes.

SARR does not have any deployable part.

2.2.2. Field of View Definition

N/A fa SARR.

2.23. Mass Properties

The mass properties of the SARR instrument are given in the following table. The co-ordinate system used is the Instrument Interface Reference Frames, $F_{SARR-Rx}$ and $F_{SARR-Tx}$.

2.23.1. Mass and Centre of Mass Location

The SARR centre of gravity location has been measured without the attachment bolts / washers or thermal stand-offs. Instrument to METOP PLM interface connectors are included.

Module SARR	Specified Mass	Centre of Mass Location With Respect to the Reference Point (± 05 mm)		
		$X_{SARR-Rx}$	$Y_{SARR-Rx}$	$Z_{SARR-Rx}$
Receiver Pallet	15.22 kg	- 223.5 mm	- 256.5 mm	- 39.0 mm
		$X_{SARR-Tx}$	$Y_{SARR-Tx}$	$Z_{SARR-Tx}$
Transmitter Pallet	5.21 kg	- i77.8 mm	- 157.5 mm	- 13.7 mm
TOTAL	20.43 kg	Including harness		

SARR Mass Properties

The SARR instrument shall not exceed the above specified mass for the METOP mission.

The mass of the Receiver Pallet and the Transmitter Pallet shall each be measured with an accuracy of ±50 grams.

The SARR basic (best estimate) mass is the specified one.

2.23.2. Moments of Inertia

The SARR moments of inertia about the centre of mass of the instrument are as follows.

Module SARR	Moments of Inertia ($kg.m^2$) ± 10%					
	I_{XX}	I_{YY}	I_{ZZ}	I_{XY}	I_{XZ}	I_{YZ}
Receiver Pallet	0.2279	0.2556	0.4457	< 0.10	< 0.10	< 0.10
Transmitter Pallet	0.0410	0.0324	0.0712	0.0	0.00027	0.0

SARR Moments of Inertia

Note : The moments of inertia are defined as follows :

$$\begin{bmatrix} I_{xx} & -I_{xy} & -I_{xz} \\ -I_{xy} & I_{yy} & -I_{yz} \\ -I_{xz} & -I_{yz} & I_{zz} \end{bmatrix} \quad \text{with :} \quad \begin{matrix} I_{xx} = \int (y^2 + z^2) dm \\ I_{yy} = \int (x^2 + z^2) dm \\ I_{zz} = \int (x^2 + y^2) dm \end{matrix} \quad \text{and} \quad \begin{matrix} I_{xy} = \int xy dm \\ I_{xz} = \int xz dm \\ I_{yz} = \int yz dm \end{matrix}$$

2.2.4. Instrument Mounting Attachments

2.2.4.1. Mounting Description

The SARR pallets are mounted conductively coupled to the internal surface of a panel of the PLM.

The following table describes the instrument mounting hardware :

Module / Unit SARR	Bolt Size	Instr. Mounting Hole Diameter (mm)	Length. (mm)	Torque (Nm)	Quantity
Receiver Pallet					
Receiver Pallet	See Mechanical Interface Drawings (§ 2.1.4.1.) TBC_{MET}	4.2	TBD_{MET}	0.9	58
Grounding Point		5.5	9.5	2.6	2
Transmitter Pallet					
Transmitter Pallet	See Mechanical Interface Drawings (§ 2.1.4.1.) TBC_{MET}	4.0	TBD_{MET}	0.9	32
Grounding Point		5.5	9.5	2.6	2

Tolerances are specified in the interface drawings (see § 2.1.4.).

Alignment Pins : N/A

2.2.43. Mounting Hole Position and Reference Point (Hole)

The definition of the mounting holes and the instrument Reference Pin for SARR is given in the Mechanical Interface Control Drawing (see § 2.1.4.).

2.2.43. Mounting Surface Characteristics

Instrument Side Transmitter and Receiver Pallets	surface Coplanarity	N/A
	Surface roughness of attachment face	N/A
	surface Finish	N/A
Transmitter Only	Total area of the mounting surface	See Mechanical Interface Drawing (§ 2.1.4.1.) Mounted using thermal filler (TBD_{MET})
Receiver Only	Total area of the mounting surface	See Mechanical Interface Drawing (§ 2.1.4.1.) Hard Mounted to PLM Panel
METOP Side	surface Flatness	Less than 0.1 mm in 100 mm
	Surface roughness of attachment face	≤ 1.6 microns R.A
	Shimming Accuracy for Flatness	Within 0.0254 mm

2.2.4.4. **Instrument Location**

The mounting surface for both pallets is on the inside surface of the +Z face of the PLM structure.

2.2.4.5. Materials at Interfaces

Instrument Side	SARR Pallets	Aluminium alloy
	Mounting Area Finish	Bare metal at all mechanical interfaces Chemglaze Z-306 Black elsewhere.
METOP Side	PLM Structure	Aluminium skin with a honeycomb core
	Attachment Bolts and Washers	Titanium bolts with stainless steel washers

2.2.4.6. **Thermo-Elastic Interface**

N/A for SARR.

2.2.4.7. Grounding Provisions

Grounding to the spacecraft structure is achieved by a Instrument provided grounding strap.

The locations of the grounding point for the Receiver and Transmitter pallets are defined in the Mechanical Interface Control Drawing (two for each pallet, see § 2.1.4.).

2.25. Accessibility

Accessibility to specific parts of the instrument pallets shall be provided, when accommodated on METOP. The faces on which specific parts are accommodated are defined in the following table :

SARR Receiver Pallet *This table indicates the viewing direction from the instrument.*			
	Item	Instrument Side (METOP Ref. Frame)	Access Required
1	Electrical Connectors	+Z, +Y and - Y	During AIT activities
2	Connector Savers	+Z, +Y and-Y	N/A
3	Connector dust caps	+Z, +Y and -Y	When the instrument is not in use.
4	Test connector cover	N/A	N / A
5	Attachment Bolts	-z	During AIT activities
6	Inter-Pallet Harness	+x	During all AIT activities

SARR Transmitter Pallet *This table indicates the viewing direction from the instrument.*			
	Item	Instrument Side (METOP Ref. Frame)	Access Required
1	Electrical connectors	-Y	During AIT activities
2	Connector Savers	-Y	During AIT activities
3	Connector dust caps	-Y	When the instrument is not in use.
4	Test connector cover	N/A	N/A
5	Transmitter Cooling Tube	-Y	During AIT activities
6	Attachment Bolts	- Z	During AIT activities
7	inter-Pallet Harness	- x	During all AIT activities

The detailed position of these items are indicated on the Mechanical Interface Control Drawings (§ 2.1.4.).

Note : the attachment bolts pass through clearance holes in SARR box feet and pallets.

2.2.6. On-Ground Alignment

N/A for SARR

2.2.7. Deployment Mechanism and Pyros

2.2.7.1. Deployment Mechanisms

N/A for SARR.

2.2.7.2. Pyros

N/A for SARR.

2.2.8. Interface Structural Design

Flight Limits Loads are enveloping the loads, including launch manufacturing, handling, transportation and ground testing (excluding qualification testing).

Qualification Limit Loads add a qualification factor (1.25 for METOP) on top of the Flight Limit Loads.

2.2.8.1. SARR Limit Loads

The SARR is tested to the following limit loads applied at the instrument interface attachment points :

Receiver & Transmitter Pallets	Load Axis (grms)		
	X	Y	Z
Maximum Flight Limit Load	7.2	7.2	8.8
Qualification Limit Loads	10.6	10.6	13.3

2.2.8.2. METOP Induced Limit Loads

Preliminary analysis indicate the following maximum predicted limit loads applied to the SARR during the METOP mission :

Receiver Pallet		
Maximum Flight Limit Load	32 g	Applied at unit centre of gravity in any spatial direction
Qualification Limit Loads	40 g	
Transmitter Pallet		
Maximum Flight Limit Load	40 g	Applied at unit centre of gravity in any spatial direction
Qualification Limit Loads	50 g	

Figure 2.2.8.2/1 : METOP Induced Loads for SARR

These levels will be revisited following future structural analysis and the METOP structural model test campaign.

2.2.83. l-g Interface Loads

The SARR l-g interface loads, calculated at each interface point (zero preload), *with the* instrument hard-mounted configuration are presented in the following tables :

SARR Hard Mounted Interface Flight Limit Loads Based on 1 g Applied in X			
Attachment Id.	**Shear Force (N)**	**Axial Force (N)**	**Moment (N.mm)**
SARR Receiver Pallet			
All attachments	< 17	< 24	<loo
SARR Transmitter Pallet			
All attachments	< 10	< 12	< 20
SARR Hard Mounted Interface Flight Limit Loads Based on 1 g Applied in Y			
Attachment Id.	**Shear Force (N)**	**Axial Force (N)**	**Moment (N.mm)**
SA RR. Receiver Pallet			
All attachments	< 17	< 24	< 100
SARR Transmitter Pallet			
All attachments	< 10	< 12	< 20
SARR Hard Mounted Interface Flight Limit Loads Based on 1 g Applied in Z			
Attachment Id.	**Shear Force (N)**	**Axial Force (N)**	**Moment (N.mm)**
SARR Receiver Pallet			
All attachments	< 17	< 24	<loo
SARR Transmitter Pallet			
All attachments	< 10	< 12	< 20

2.2.8.4. Structural Frequency Characteristics

The SARR Receiver and Transmitter pallets have no mode with frequencies below 150 Hz with effective masses greater than 5% of the total pallet mass.

2.2.8.5. *Structural* Mathematical Models - Applicability for SARR

This section is not applicable to SARR.

2.3. THERMAL INTERFACE DESCRIPTION

23.1. Instrument Thermal Control Concept

The Instrument Supplier is responsible for the thermal design and the thermal analysis of the instrument within the METOP defined thermal interface constraints.

The instrument has two major subassemblies : a Receiver Pallet and a Transmitter Pallet interconnected by an electrical harness. METOP provides radiative cooling to the PLM panel on which the SARR units are mounted. This cooling is sufficient to keep the SARR baseplate temperature below the maximum temperature limit of the instrument in all modes.

The temperature for the Receiver Pallet is actively controlled by the METOP TCU using one thermistor and one heater (no redundancy) directly coupled to the instrument "intemal" interface plate. All connections to this active thermal control hardware of the instrument is achieved using the J7 connector. The Instrument Supplier will integrate the heater and thermistor supplied and specified by METOP.

The temperature of the Transmitter Pallet is actively controlled by the METOP TCU using thermistors and heaters mounted adjacent to the Transmitter Pallet on the inside surfaces of the PLM panels.

23.1.1 Thermal Control During Nominal Operations

The nominal operations correspond to the SARR On mode.

The instrument thermal control concept can be summarized as follows :

For both pallets, the interface temperatures are actively controlled by the METOP PLM Thermal Control Unit (TCU) by means of heaters and thermistor sensors. The interface plate of each pallet is conductively coupled to radiators that are sired to produce temperatures at the low6 end of the range. The temperatures and temperature stability are conuolled using heaters.

2.3.1.2. Thermal Control During Non Nomirial / Contingency Operations

The non nominal / contingency mode corresponds to the SARR Off Mode.

During this mode, the SARR Receiver and Transmitter Pallets use METOP provided thermostatically controlled heaters to maintain survival temperatures. The heater for the receiver pallet is mounted internally to the receiver pallet The heater for the transmitter pallet is mounted externally to the transmitter pallet. All thermostats are mounted externally to the SARR.

23.2. Instrument Thermal Requirements

233.1. Instrument Temperature Range

2.3.2.1.1. On-Orbit Temperature Range

The following are the on-orbit temperature limits :

Deg. C	Operational		Non Operational (Off Mode)		Switch-On
	Min.	Max.	Min.	Max.	Min.
Receiver Temperatures	+10	+35	-40	+60	-10
Ref. Point Location	On the Pallet (TBD)		Satellite to Pallet Interface (TBD)		On the Pallet (TBD)
Transmitter Temperatures	+10	+35	-40	+60	- 1 0
Ref. Point Location	Satellite to Pallet Interface (TBD)		Satellite to PaIlet Interface (TBD)		Satellite to Pallet Interface (TBD)

2.3.2.1.2. Ground Testing Temperature limits

Deg. C	Operational		Non Operational (Off Mode)		Switch-On
	Min.	Max.	Min.	Max.	Min.
Receiver Temperatures	-10	+50 (Note)	-40	+60	-10
Ref. Point . Location	On the Pallet (TBD)		Satellite to Pallet Interface (TBD)		On the Pallet (TBD)
Transmitter Temperatures	-10	+50 (Note)	-40	+60	-10
Ref. Point Location	Satellite to Pallet Interface (TBD)		Satellite to Pallet Interface (TBD)		Satellite to Pallet Interface (TBD)

Note : SARR may deviate from specified performances (frequency stability is achieved only in vacuum at temperatures between +10 and +35 deg. C).

2.3.2.1.3. Ground Storage and Transportation Temperature Range

During ground storage, with the instrument installed on the satellite, and during transportation of the complete spacecraft, the temperatures of the instrument will be maintained in the range :

- 40 to + 60 deg. C

233.2. Temperatures at the Interface

The interface temperatures are defined in § 2.3.2.1.

Stability Requirements

There is a thermal stability requirement for the Receiver and Transmitter Pallets in On Mode, that applies at the pallet temperature point, as given in § 2.3.2.1.

Within a 1 minute period, the maximum allowable temperature variation at the Temperature Reference Point shall be 0.25 deg. C peak to peak. The long term mean temperature will fall within the defined operating temperahxe range.

2.3.23. Radiative Requirements

The SARR Pallets are connected to radiators oriented in the +Z directions (METOP satellite axes). The majority of the remaining surfaces are black painted.

23.3. Thermal Control Budgets

233.1. Heater Power Budgets

The SARR pallets are internally mounted and as such the heater power budget is a satellite responsibility

233.2. Instrument Thermal Dissipation.

The dissipation of the SARR instrument is constant throughout the orbit and is (see § 3.4.2)

	SARR Thermal Dissipation (Watts)			
	Satellite Nominal Operating Modes			Safe Mode
	Minimum Dissipation		Maximum Dissipation	min / Max
	On Mode BOL	Off Mode	On Mode EOL	Off Mode EOL
Receiver Pallet	11.6 W *	0	12w	0
Transmitter Pallet	20.4 W	0	25 W	0
Total	32W	o w	37w	o w

* : Three receivers operating

2333. Heat Exchange Budgets

Both SARR Pallets are conductively coupled to the METOP PLM.

2.3.3.3.1. Conductive Heat Transfer Budget

Not applicable.

2.3.3.3.2. Joint Characteristics

The SARR pallets are conductively coupled to the inside of the PLM panel. The Receiver pallet is hard mounted and the Transmitter pallet is mounted using thermal filler (TBD_{MET}).

2.3.3.3.3. Radiative Heat Transfer Budget

This section is not applicable to SARR. The SARR pallets internally radiates to the PLM.

2.3.4. Thermal Interfaces

2.3.4.1. Conductive Interfaces

The total thermal conductance between the SARR Receiver Pallet and the Payload Module is : 4.7 w / deg. c.

The total thermal conductance between the SARR Transmitter Pallet and the Payload Module is : 109.7 W/&g. c.

The SARR pallets are conductively coupled to the external surfaces of the PLM.

The contact pallet area with the PLM panel is defined at the footprint area and is given as :

Unit	Footprint Area (m^2)
Receiver Pallet	0.189
Transmitter Pallet	0.129

2.3.4.2. Radiative Interfaces

2.3.4.2.1. Radiative Characteristics

The SARR pallets internally radiates to the PLM.

The thermal radiative environment temperamre in the hot case is TBD_{MET} deg. C.

2.3.4.2.2. Thermo-Optical Properties

The SARR unit surfaces are black painted.

The mechanical characteristics (planarity, materials...) is described in the Mechanical Interface Description sections (§ 2.2.4.).

The thermo-optical properties of the finishes are given in the following table :

#	Acronym	Surface / Material	Solar Absorptance			IR
			BOL *	EOL * 5yr.	EOL * 6yr.	Emit-tance
1	CHM306TTT	Black Paint Chemglaze 2306	0.95	0.95	0.95	0.90

• : these values are not normally applicable but are required for the modelization (ESARAD).

SA *RR Receiver and Transmitter Pallet Material Thermo-Optical Properties*

23.43. Thermal Heat Capacity

The total thermal heat capacity of SARR Receiver is 1.0844 E+04 J/K.

The total thermal heat capacity of SARR Transmitter is 1.789 E+03 J/K.

2.3.4.4. Instrument Temperature Measurement

This section is not applicable for the SARR Transmitter Pallet.

SARR Receiver Pallet : TBD_{SAR}.

23.45. Heater Definition

This section is not applicable for the SARR Transmitter Pallet.

SARR Receiver Pallet :

Location	Number	Total Resistance (Ω at 25 deg. C) ± 5%	Resistance Variation ΔR/R
Receiver Pallet Operational Heaters	TBD_{MET}	TBD_{MET}	TBD_{MET} / deg. C

2.3.4.6. Thermal Interface Models

A reduced model is required for SARR pallets for the system thermal analysis, as specified in AD3.

See AD5 and AD6.

2.4. INSTRUMENT AND DISTURBANCE INTERFACES

This section is not applicable to SARR.

3. COMMAND AND CONTROL, MEASUREMENT DATA, ELECTRICAL, EMC AND RFC INTERFACE DESCRIPTION

BLANK

3.1. ELECTRICAL INTERFACE OVERVIEW

The avionics interface between the METOP payload Module (PLM) and the SARR instrument is mainly handled via the Power Conditioning Unit (PCU) and the NOM Interface Unit (NIU).

The thermal control is provided by the Thermal Control Unit (TCU). Only the connector but not the electrical interface is defined in this section (see also § 2.3).

The SARR receives 2.4 kbps data from the Search and Rescue Processor (SARP-3) and RF input data from the RF Filter (RFF).

The SARR provides RF output data to the L-Baud Transmit Antenna (SLA).

For adaptation of the single ended interfaces of the SARR, a special grounding concept is described in § 3.8 (EMC).

The command and housekeeping budget for the instrument is as follows :

- 18 (2 x 9) level discrete commands
- 14 (2 x 7) pulse discrete commands
- 4 digital B parameters, each 1 bit
- 22 (2 x 10 + 2) analog parameters, each to be converted to 8 bits within NIU.

Figure 3. l-l gives an overview on the elecuical interfaces between the PLM, SARP-3, RFF, SLA and SARR.

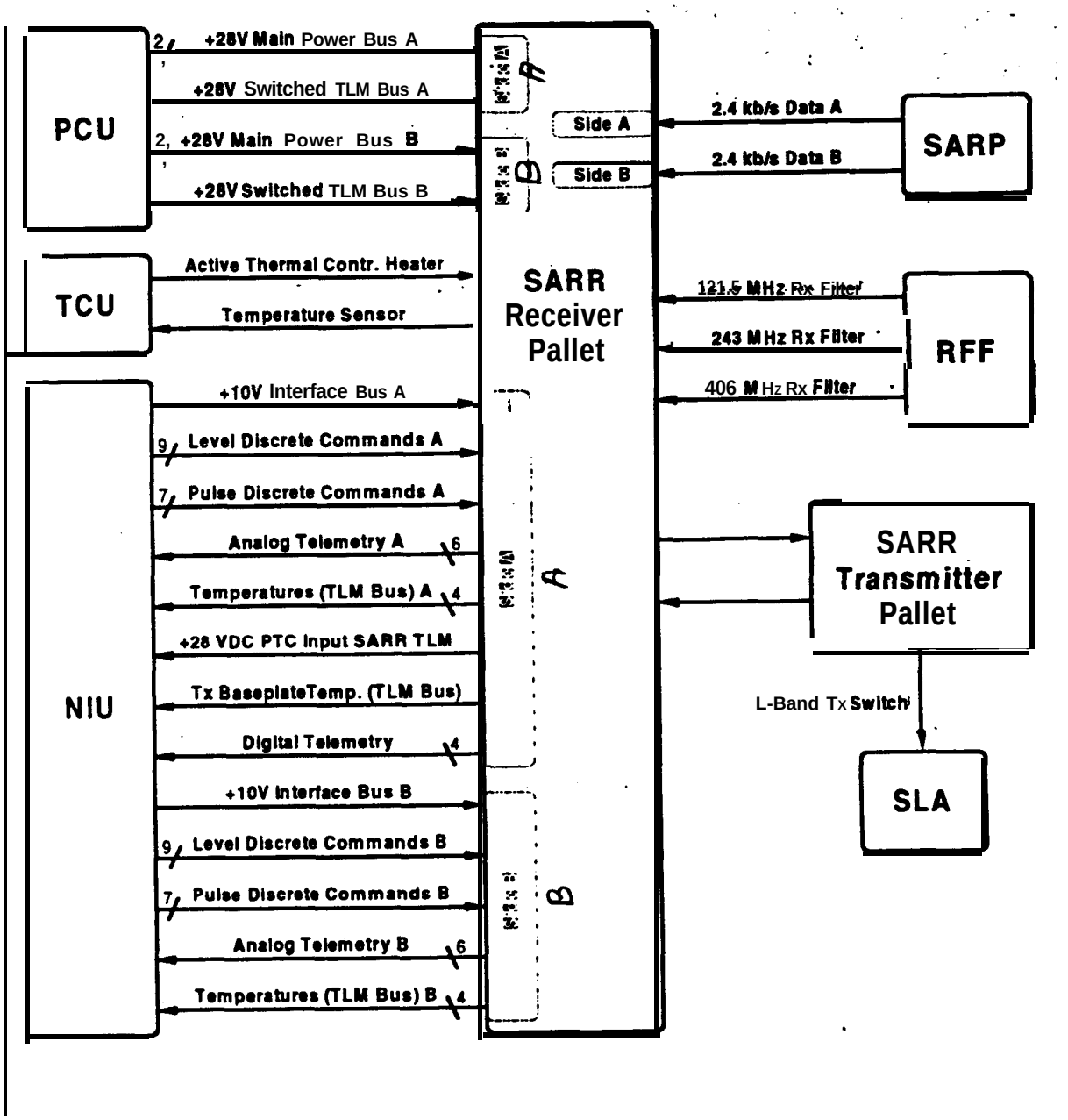

Fig. 3.1-1 : *PLM to SARR Electrical Interface Overview*

3.2. COMMAND AND CONTROL FUNCTIONAL DESCRIPTION

This section describes the command and control concept for the SARR instrument.

'Command and Control' comprises the activities resp. data flows for commanding of the instrument as well as for the acquisition of instrument housekeeping data.

Commanding of the instrument and acquisition of instrument housekeeping telemetry is performed under the control of the NOAA Interface Unit (NIU). Commands are distributed from the PMC via the PLM OBDH Bus to the NIU which translates or converts the functional and electrical interfaces to NOAA instruments and controls command execution. Vice versa housekeeping data are acquired by the NIU from the instrument and transmitted to ground

Three data sets are made available by the SARR:

- Digital B data
- Analogdata

Digital B and Analog Data are housekeeping data and only the Digital B data are controlled by the NIU. Both are reported to the ground via S-band telemetry.

33.1. Protocol

Not applicable for SARR

3.2.2. Telecommands

Telecommands to the instrument shall be provided by the NIU.

The minimum time between two consecutive commands is 1 s.

The instrument shall be commanded by Pulse Discrete* and Level Discrete Commands[2].

Pulse Discrete Commands shall be issued to the instrument one command at a time.

Any pulse ON condition may last for considerable time in case of a spacecraft anomaly. The instrument shall not be damaged by such an occurrence.

The METOP satellite will provide capabilities for pre-programming of the SARR of up to.36 hours. The instrument shall cope with this pre-programming period, and not require any intermediate command and control process.

---

1 *Pulse Discrete Command Definition*
Tbe pulse discrete command is normally used to change the state of a latching relay in the instrument. An ON or TRUE condition is issued in the form of a pulse to the instrument over a single line.

2 *Level Discrete Command Definition*
The level discrete command presents a ON or TRUE (resp. OFF or FALSE) condition to tbe instrument full time. until the same command is given to change the state to OFF or FALSE (resp. OFF or FALSE).

The commands to operate the instrument shall be as listed in Table 3.22-l.

Note: The operational modes and sequencof commanding are defined in § 1.4 and 1.5.

333.1. Telecommand Definition

Nr.	Telecommand	Mnemo	Type	Remarks
1	SARR Level Control A Bit 0		Level	
2	SARR Level Control A Bit 1		Level	
3	SARR Level Control A Bit 2		Level	Nominal CMDs
4	SARR Level Control A Bit 3		Level	
5	SARR Level Control A Bit 4		Level	
6	SARR Bus A Destination Bit 5		Level	
7	SARR Bus A Destination Bit 6		Level	Nominal CMDs
8	SARR Level Control B Bit 0		Level	
9	SARR Level Control B Bit 1		Level	
10	SARR Level Control B Bit 2		Level	Redundant CMDs
11	SARR Level Control B Bit 3		Level	
12	SARR Level Control B Bit 4		Level	
13	SARR Bus B Destination Bit 5		Level	
14	SARR Bus B Destination Bit 6		Level	Redundant CMDs
15	SARR AGC Enable / Disable A		Level	Nominal CMD
16	SARR AGC Enable / Disable B		Level	Redundant CMD
17	SARR Tx A On - Tx B Off		Pulse	Nominal CMD
18	SARR Tx B On - Tx A Off		Pulse	Redundant CMD
19	SARR Conv. A On - Conv. B Off		Pulse	Nominal CMD
20	SARR Conv. B On - Conv. A Off		Pulse	Redundant CMD
21	SARR 121/243 A On - 121/243 B Off		Pulse	Nominal CMD
22	SARR 121/243 B On - 121/243 A Off		Pulse	Redundant CMD
23	SARR 406 A On - 406 B Off		Pulse	Nominal CMD
24	SARR 406 B On - 406 A Off		Pulse	Redundant CMD
25	SARR Execute Level Control A		Pulse	Nominal CMD
26	SARR Execute Level Control B		Pulse	Redundant CMD
27	SARR PTC A & Tx A Off		Pulse	Redundant CMD
28	SARR PTC B & Tx B Off		Pulse	Nominal CMD
29	SARR 406 A Off		Pulse	Nominal CMD
30	SARR 406 B Off		Pulse	Redundant CMD
31	SARR Tx A Enable/Disable		Level	Nominal CMD
32	SARR Tx B Enable/Disable		Level	Redundant CMD

Table 3.2.2-l : *Telecommand* ***Definition***

3.2.2.2. Telecommand Functional Description

Details on the functions of each SARR command are given in this section.

1...5) SARR Level Control A Bit 0, Bit 1, Bit 2, Bit 3 and Bit 4 (Receiver Attenuators)

These five level discrete commands together define the level of the data from the three "A" receivers and the SARP-3 data received by the "A" FTC. They operate together with Bits 5 and 6 which define the one of the four data sources to which Bits 0-4 apply, and with the "SARR Execute Level Control A" pulse discrete which commands the SARR to decode Bits 0-6 and assume the commanded state.

The meaning of Bits O-4 are different for the different data sources as follows :

(a) 121.5 MHz receiver and 243 MHz receiver.
Bits 0-3 form a binary number defining attenuation in decibels. Bit 0 is the most significant bit (MSB) with weight 8 dB; Bit 3 is the least significant bit (LSB) with weight 1 dB.
Bit 4 provides receiver baseband signal output cut-off capability ; when Bit 4 equals 1, the receiver passes the signal with the attenuation defined by Bits O-3 ; when Bit 4 equals 0, the receiver disconnects the signal from the transmitter.

(b) 406.05 MHz receiver.
Bit O-3 have the same meaning as in the 1215 MHz and 243 MHz receivers.
Bit 4 is meaningless.

(c) SARP-3 data.
Bits 0 and 1 define the attenuation setting in the PTC according to the code below

Bit 0	Bit 1	Attenuation, dB
0	0	0
0	1	10
1	0	5
1	1	15

Bits 24 are meaningless.

The meaning of Bits 0 to 4 is summarized in Table 3.2.2.2-1.

	121 / 243 A Receiver	406 A Receiver	SARP-3 Data A Receiver	Comments
Bit 0	8 dB	8 dB	5 dB	OFF = 0 dB
Bit 1	4 dB	4 dB	10 dB	OFF = 0 dB
Bit 2	2 dB	2 dB	No meaning	OFF = 0 dB
Bit 3	1 dB	1 dB	No meaning	oFF=odB
Bit 4	Receiver Output On / Off	Nomeaning	No meaning	

Table 3.2.2.2-1 : Receiver Attenuators - Level Discrete Commands

The SARR does not respond to changes in these level discrete commands. Rather, it responds to their state at the time it receives the pulse discrete comma4 "*SARR Execute Level Control A*".

6 & 7.) SARR **Bus A Destination Bit 5 and Bit 6**
(Receiver Selection)

These two level discrete commands together define the destination of the level control commands defined by the Bits 0-4 and the destination of the AGC disable commands as shown below..

Bit 5	Bit 6	Destination
0	0	121.5 MHz "A" receiver
0	1	243 MHz "A" receiver
1	0	406.05 MHz "A" receiver
1	1	SARP-3 data attenuators in the "A" PTC

The SARR does not respond to changes in these level discrete commands. Rather, it responds to their state at the time it receives the pulse discrete command, "SARR *Execute* Level Control A".

8...12.) SARR level Control B Bit 0, Bit 1, Bit 2, Bit 3 and Bit 4

The description in 1...5) above applies, substituting "B" for "A".

13 & 14.) SARR Bus B Destination Bit 5 and Bit 6

The description in 6&7.) above applies, substituting "B" for "A".

15.) SARR AGC Disable / Enable A

The "0" state of this level discrete selects the fixed gain mode far the receiver designated *by Bus A Destination Bits 5 and 6*. The "1" state selects AGC mode for that receiver. The SARR ignores the state of this discrete if Bus A *Destination Bits 5 and 6 are both* "1". The SARR does not respond to changes in this level discrete. Rather, it responds to the state of the discrete at the time the SARR receives the pulse discrete command "*SARR Execute Level Control* A".

16.) SARR AGC Disable / Enable B

The description in 15.) above applies. substituting "B" for "A".

17.) SARR Tx A ON - Tx B OFF

This command causes the SARR to connect the +28 Volt Main Bus to the power input of the "A" transmitter and connects the RF output of that transmitter to the SLA. This command also causes the SARR to disconnect the +28 Volt Main Bus from the power input of the "B" transmitter. This command

has no effect on the DC/DC converter residing in either PTC, and has no effect on any receiver.

18.) **SARR Tx B ON - Tx A OFF**

The description in 17.) above applies, substituting "B" far "A".

19.) SARR Conv. A ON- Conv. B OFF

This command causes the SARR to connect the +28 Volt Main Bus to the power input of the DC/DC converter residing in the "A" PTC and to disconnect the +28 Volt Main Bus from the power input to the DC/DC converter residing in the "B" PTC. This command has no effect on the power status of either transmitter or on the state of any RF switch. The result of this command is to make secondary power available to the power inputs of the "A" receivers. However, other commands defined below determine whether or not those power inputs connect to the output of the DC/DC converter.

20.) SARR Conv. B ON - Conv. A OFF

The description in 19.) above applies, substituting "B" for "A".

21.) **SARR 121/243** A ON **- 121/243 B OFF**

This command causes the SARR to connect the power input to the "A" 121/243 MHz receives to the power output from the DC/DC converter residing in the "A" PTC. It also causes the SARR to connect the RF input to the "A" 121.5 MHz receiver to the SARR 121.5 MHz bandpass filter and thence to RFF-5 and the 121.5 MHz port of the SRA ; it causes the SARR to connect the RF input to the "A" 243 receiver to the SARR 243 MHz bandpass filter and thence to RF-4 and the 243 MHz port of the SRA. The SARR disconnects the power input to the "B" 121/243 MHz receivers from the power output from the DC/DC converter residing in the "B" PTC. It disconnects the RF inputs of the "B" 121.5 MHz and 243 MHz receivers from the RF paths &fined above. This command has no effect on the power ON/OFF status of the DC/DC converter residing in either PTC. It has no effect on the power status or RF connection of either transmitter.

This command also connects the +28 V oven power to the "A" 121/243 MHz receiver and disconnects the +28 V oven power from the "B" 1211243 MHz receiver.

22.) **SARR 121/243** B ON **- 121/243** A OFF

The description in 21.) above applies, substituting "B" far "A".

. 23.) **SARR 406 A ON - 406 B OFF**

This command causes the SARR to connect the power input to the "A" 406.05 MHz receiver to the power output from the DC/DC converter residing in the "A" PTC. It also causes the SARR to connect

the RF input to the "A" 406.05 MHz receiver to the SARR 406.05 MHz bandpass filter and thence to RFF-3 and the 406.05 MHz port of the SRA.

The SARR disconnects the power input to the "B" 406.05 MHz receiver from the power output from the DC/DC converter residing in the "B" PTC. It disconnects the RF input of the "B" 406.05 MHz receiver from the RF path defined above. This command has no effect on the power ON/OFF status of the DC/DC converter residing in either PTC. It has no effect on the power status or RF connection of either transmitter.

24.) **SARR 406 B ON - 406 A OFF**

The description in 23.) above applies, substituting "B" for "A".

25.) SARR Execute Level Control A

This pulse discrete causes the SARR to execute the commands defined by the current state of all the "A" side level discrete commands, including level setting and AGC enable/disable. The SARR executes this command independent of its mode status. so long as the +28 Volt Main Bus and the +10 Volt Interface Bus are present. Execution takes the form of driving a set of latching relays in the PTC and the selected receiver. This command has no effect on the "B" PTC or any "B" receiver. It has no effect on the power ON/OFF status of RF signal routing of any unit

26.) SARR Execute Level Control B

The description in 25.) above applies substituting "B" for "A".

27.) **SARR PTC A and Tx A OFF**

This command causes the SARR to disconnect the power input to the DC/DC converter residing in the 'A" PTC and the "A" transmitter from the +28 Volt Main Bus. It has no effect on any "B" unit or RF signal routing of any unit. It has no effect on the connections between the power output of either DC/DC converter and the power input to any receiver.

28.) SARR PTC B and Tx B OFF

The descriptuon in 27.) above applies. substituting "B" for "A".

29.) SARR 406 A OFF

This command causes the SARR to disconnect the power input to the "A" 406.05 MHz receiver from the power output from the DC/DC converter residing in the "A" PTC. This command has no effect on the ON/OFF power status of any other unit It has no effect on the RF signal routing of any unit.

30.) SARR 406 B OFF

The description in 29.) above applies, substituting "B" for "A".

31.) **SARR** Tx **A Enable/Disable**

The "0" state of this level discrete (+10 V) allows the A-side transmitter to commanded "ON". The "1" state (0 V) inhibits the "ON" command or cause the A-side' transmitter to turn "Off when powered.

32.) **SARR** Tx B **Enable/Disable**

The description in (31) above applies, substituting "B" for "A".

3.23. Housekeeping Telemetry

This section describes the SARR Digital B and Analog Telemetry.

323.1. General Requirements

The NIU shall only acquire the instrument-provided digital-B and analog HK data at any time when the instrument is in the ON-mode.

The NIU will read out the following housekeeping telemetry formats from the instrument :

- Analog HK
- Digital HK ("Digital B").

The NIU will sample both analog and digital B housekeeping telemetry, with rates of :

- once per 16 seconds nominally
- up to 8 times per second for any selected parameter on request.

Analog data shall be acquired and converted within the NIU to 8 bit digital information with a 5.12 V full scale resolution (LSB = 20 mV).

No instrument housekeeping data shall be monitored by the METOP satellite. Nevertheless tbe Digital B data will be checked on-board for verification of command execution.

Note : for those commands that do not result in a change of a Digital B point, the verification of the command receipt by the instrument will be done by the Ground System with the instrument provided Analog Telemetry points.

3.23.2. Digital B Telemetry

The instrument shall provide the Digital B telemeny as listed in Table 3.2.3-l.

Each of the 4 Digital B telemetry points shall indicate the status of one pair of commands according to § 3.2.2.

Availability of Digital B telemetry : TBD_{SARR}.

The Digital B telemetry points shall be defined as following :

1.) SARR 121.5 *MHz* RF *Redundancy Switch*

This point reports which of the two redundant 121.5 MHz receivers is connected to SARR J8, the interface with the 121.5 MHz RF filter, RFF-5. This telemetry point provides valid data in all SARR modes.

2.) SARR 243 *MHz Redundancy Switch*

This point reports which of the two redundant *243* MHz receivers is connected to SARR J9, the interface with the *243 MHz RF filter,* RFF-4. *This* telemetry *point provides* valid data in all SARR modes.

3.) SARR 406.05 *MHz RF Redundancy Switch*

This point reports which of the two redundant 406.05 MHz receivers is connected to SARR J10, *the* interface with the 406.05 MHz RF filter, *RFF-3.* This telemetry *point* provides valid data in all SARR modes.

4.) *SARR Tx Output RF Redundancy Switch*

This points reports which of the two redundant transmitters is connected to the SARR J11, the interface with the SLA This telemetry point provides valid data in all SARR modes.

Nr.	Telemetry Point Name	State		Remark
		Logic "1" (Low Voltage)	Logic "0" (High Voltage)	
1	SARR 1215 MHz Redundancy Switch	A	B	
2	SARR 243 MHz Redundancy Switch	A	B	
3	SARR 406 MHz Redundancy Switch	A	B	
4	SARR Tx Output RF Redundancy Switch	A	B	

***Table** 3.2.3-l : SARR Digital B Telemetry*

33.33. Analog Telemetry

The SARR provides analog telemetry channels as listed in Table 3.2.3-2 to monitor the instrument on the ground. It shall be considered that telemetry of analog voltage and current (analog telemetry) will be valid by 50 ms after switching-on of instrument telemetry, i.e. after the *Instrument ON* command sequence has been sent.

Analog Temperature Telemetry shall be available whenever the 28 V Analog Temperature Telemetry Bus is, powered and be valid with& 10 ms after Analog Temperature Telemetry Bus has been commanded ON (independent of SARR mode).

Typical valid data ranges and values are shown in Table 3.2.3-2.

The telemetry points shall be defined as following :

1.) SARR Tx A RF Driver Current

When transmitter A is ON, this telemetry voltage is an analog of the DC current drawn by the transmitter A RF driver amplifier from the transmitter A regulated power supply. When transmitter A is OFF, this telemetry voltage is 0 ± 0.5 V.

2.) *SARR Tx B RF Driver Current*

The description in (1.) above applies, substituting B for A.

3.) *SARR PTC* 28 *Volt input Monitor*

'his telemetry voltage is an analog of the + 28 V Main Bus voltage at the input to either or both PTCs, independent of SARR ON/OFF status.

4.) SARR PTC A 16 *Volt Output Monitor*

This telemetry voltage is au analog of the PTC A DC/DC converter output voltage, independent of SARR ON/OFF status.

5.) SARR FTC *B* 16 *Volt Output Monitor*

The description in (4.) above applies, substituting B for A.

6. *SARR* 121.5 *MHz Rx A AGC Volts*

When 121.5 MHz receiver A is powered, this telemetry voltage is an analog of the gain control voltage to the 121.5 KHz receiver A I.F. amplifiers. The analog relationship is independent of whether the receiver is in AGC mode or in fixed-gain mode. When 121.5 MHz receiver A is unpowered, this telemetry voltage is 0 ± 0.5 V.

7.) *SARR* 121.5 *MHz Rx B AGC Volts*

The description in (6.) above applies, substituting B for A

8.) SARR 243 *MHz Rx A AGC Volts*

The description in (6.) above applies. substituting 243 for 121.5.

9.) *SARR* 243 *MHz Rx B AGC Volts*

The description in (8.) above applies substituting B for A.

IO.) SARR 406.05 *MHz Rx A AGC Volts*

The description in (6.) above applies substituting 406.05 for 121.5.

I I.) SARR 406.05 *MHz Rx B AGC Volts*

The description *in* (10.) above applies. substituting B for A

12.) SARR *Tx A Temperature*

When the + 28 V analog temperature telemetry bus is ON, this telemetry voltage is an analog of the temperature of a point internal to transmitter A, located near the final RF power transistor. The analog relationship is independent of the SARR ON/OFF status. When the + 28 V analog temperature telemetry bus is OFF, this telemetry voltage is 0 ± 0.5 V.

13.) SARR *Tx B Temperature*

The description in (12.) above applies. substituting B for A

14.) SARR PTC A Temperature

When the + 28 V analog temperature telemetry bus is ON, this telemetry voltage is an analog of the temperature of a point in the DC/DC converter in PTC A. The analog relationship is independent of the SARR ON/OFF status. When the + 28 V analog temperature telemetry bus is OFF, this telemetry voltage is 0 ± 0.5 V.

IS.) SARR PTC B Temperature

The description in (14.) above applies, substituting B for 'A.

16.) SARR Tx A Output Power

When transmitter A is ON, this telemetry voltage is an analog of the RF power from the final RF power transistor to the low-pass filter and output isolator in transmitter A When transmitter A is OFF. this telemetry voltage is 0 ± 0.5 V.

17.) SARR *Tx B Output Power*

The description in (16.) above applies, substituting B for A.

18.) *SARR 121.5/243 MHz Receiver A Local Oscillator Oven Extemal Case Temperature*

The local oscillator subassembly of the 121.5/243 MHz receiver assembly contains a crystal oscillator housed in a temperature-controlled oven. When the + 28 V analog temperature telemetry bus is ON, this telemetry voltage is an analog of the temperature of a point on the outside of the case of the temperature-controlled oven. The analog relationship is independent of the SARR ON/OFF status. When the + 28 V analog temperature telemetry bus is OFF, this telemetry voltage is 0 ± 0.5 V.

19.) SARR 121.5/243 MHz Receiver B Local Oscillator Oven External Case Temperature

The description in (18.) above applies, substituting B for A.

20.) *SARR 406.05 MHz Receiver A Local Oscillator Oven External Case Temperature*

The description in (18.) above applies substituting *406.05* for 121.5/243.

21.) SARR 406.05 MHz Receiver B Local Oscillator Oven External Case Temperature

The description in (20.) above applies, substituting B for A

22.) SARR Tx Baseplate Temperature

When the + 28 V temperature telemetry bus is ON, this telemetry voltage is an analog of the temperature of a point near the centre of the surface of the transmitter assembly baseplate. The surface is that which faces the inside of the METOP PLM. The analog relationship shall be independent of the SARR ON/OFF status. When the + 28 V analog temperature telemetry bus is OFF, this telemetry voltage is 0 ± 0.5 V.

The analog telemetry shall have the performance as defined in Table 3.23-2. The transfer function between physical range and voltage range is part of the deliverables / as-built data.

Nr.	Telemetry Point Name	Physical Range	Remarks
1	SARR Tx A RF Driver Current	TBD_{SARR}	Nominal
2	SARR Tx B RF Driver Current	TBD_{SARR}	Redundant
3	SARR PTC 28 Volt Input Monitor	TBD_{SARR}	Common
4	SARR PTC A 16V Output Monitor	TBD_{SARR}	Nominal
5	SARR PTC B 16V Monitor	TBD_{SARR}	Redundant
6	SARR 121.5 MHz Rx A AGC Volts	TBD_{SARR}	Nominal
7	SARR 121.5 MHz Rx B AGC Volts	TBD_{SARR}	Redundant
8	SARR 243 MHz Rx A AGC Volts	TBD_{SARR}	Nominal
9	SARR 243 MHz Rx B AGC Volts	TBD_{SARR}	Redundant
10	SARR 406 MHz Rx A AGC Volts	TBD_{SARR}	Nominal
11	SARR 406 MHz Rx B AGC Volts	TBD_{SARR}	Redundant
12	SARR Transmitter A Temperature +15 VDC Monitor	TBD_{SARR}	Nominal, Powered by Anal. Temp. TLM Bus
13	SARR Transmitter B Temperature	TBD_{SARR}	Redundant, Powered by Anal. Temp. TLM Bus
14	SARR PTC A Temperature	TBD_{SARR}	Nominal, Powered by Anal. Temp. TLM Bus
15	SARR PTC B Temperature	TBD_{SARR}	Redundant, Powered by Anal. Temp. TLM Bus
16	SARR Tx A Output Power	TBD_{SARR}	Nominal
17	SARR Tx B Output Power	TBD_{SARR}	Redundant
18	SARR 121/243 MHz Receiver A Local Oscillator Oven External Case Temperature	TBD_{SARR}	Nominal, Powered by Anal. Temp. TLM Bus
19	SARR 121/243 MHz Receiver B Local Oscillator Oven External Case Temperature	TBD_{SARR}	Redundant, Powered by Anal. Temp. TLM Bus
20	SARR 406 MHz Receiver A Local Oscillator Oven External Case Temperature	TBD_{SARR}	Nominal, Powered by Anal. Temp. TLM Bus
21	SARR 406 MHz Receiver B Local Oscillator Oven External Case Temperature	TBD_{SARR}	Redundant, Powered by Anal. Temp. TLM Bus
22	SARR Tx Baseplate Temperature	TBD_{SARR}	Common, Powered by Anal. Temp. TLM Bus

Table 3.2.3-i : *Analog Telemetry*

Following are the Analog Telemetry status as function of the different telecommands (verification of the telecommands on the ground) :

	Command	Analog Telemetry Status	Timing
1	SARR Level Control A Bit 0	No relevant indicator	-
2	SARR Level Control A Bit 1	No relevant indicator	-
3	SARR Level Control A Bit 2	No relevant indicator	-
4	SARR Level Control A Bit 3	No relevant indicator	-
5	SARR Level Control A Bit 4	No relevant indicator	-
6	SARR Bus A Destination Bit 5	No relevant indicator	-
7	SARR Bus A Destination Bit 6	No relevant indicator	-
8	SARR Level Control B Bit 0	No relevant indicator	-
9	SARR Level Control B Bit 1	No relevant indicator	-
10	SARR Level Control B Bit 2	No relevant indicator	-
11	SARR Level Control B Bit 3	No relevant indicator	-
12	SARR Level Control B Bit 4	No relevant indicator	-
13	SARR Bus B Destination Bit 5	No relevant indicator	-
14	SARR Bus B Destination Bit 6	No relevant indicator	-
15	SARR AGC Enable / Disable A	No relevant indicator	-
16	SARR AGC Enable / Disable B	No relevant indicator	-
17	SARR Tx A On - Tx B Off	SARR Tx A RF Driver Current, value > 0.5 V SARR Tx A Output Power, value > 0.5 V SARR Tx B RF Driver Current, value < 0.5 V SARR Tx B Output Power, value < 0.5 V	50 ms
18	SARR Tx B On - Tx A Off	SARR Tx B RF Driver Current, value > 0.5 V SARR Tx B Output Power, value > 0.5 V SARR Tx A RF Driver Current. value < 0.5 V SARR Tx A Output Power, value < 0.5 V	50 ms
19	SARR Conv. A On - Conv. B Off	SARR PTC A 16V Output Monitor, value > 0.5 V SARR PTC B 16V Output Monitor, value < 0.5 V	50 ms
20	SARR Conv. B On - Conv. A Off	SARR PTC B 16V Output Monitor, value > 0.5 V SARR PTC A 16V Output Monitor, value < 0.5 V	50 ms
21	SARR 1211243 A On - 121/243 B Off	SARR 121 MHz Rx B AGC Volts, value < 0.5 V SARR 243 MHz Rx B AGC Volts, value < 0.5 V	130 m
22	SARR 121/243 B On - 1211243 A Off	SARR 121 MHz Rx A AGC Volts, value < 0.5 V SARR 243 MHz Rx A AGC Volts, value < 0.5 V	130 m

Table 3.2.3-3 : Instrument Analog Telemetry vs. Commands (1/2)

	Command	Analog Telemetry Status	Timing
23	SARR 406 A On - 406 B Off	SARR 406 MHz Rx B AGC Volts, value > 0.5 V	130 ms
24	SARR 406 B On - 406 A Off	SARR 406 MHz Rx A AGC Volts, value > 0.5 V	130 ms
25	SARR Execute Level Contrl A	No relevant indicator	
26	SARR Execute Level Control B	No relevant indicator	
27	SARR PTC A & Tx A Off	SARR PTC A 16V Output Monitor, value < 0.5 V SARR Tx A RF Driver Current, value < 0.5 V SARR Tx A Output Power, value < 0.5 V SARR 121.5 MHz Rx A AGC Volts, value < 0.5 V SARR 243 MHz Rx A AGC Volts. value < 0.5 V SARR 406 MHz Rx A AGC Volts, value < 0.5V	130 ms
28	SARR PTC B & Tx B Off	SARR PTC B 16V Output Monitor, value c 0.5 V SARR Tx B RF Driver Current, value < 0.5 V SARR Tx B Output Power, value < 0.5 V SARR 121.5 MHz Rx B AGC Volts, value c 0.5 V SARR 243 MHz Rx B AGC Volts, value < 0.5 V SARI? 406 MHz Rx B AGC Volts, value < 0.5 V	130 ms
29	SARR 406 A Off	SARR 406 MHz Rx A AGC Volts, value < 0.5 V	130 ms
30	SARR 406 B Off	SARR 406 MHz Rx B AGC Volts. value < 0.5 V	130 ms
31	SARR Tx A Enable/Disable	No relevant indicator	
32	SARR Tx B Enable/Disable	No relevant indicator	

Table 3.2.3-3 : Instrument Analog Telemetry vs. Commands(2/2)

32.4. Telecommand Verification

No check shall be performed by the satellite to verify whether the command is consistent with the active instrument mode.

The execution of some commands shall be verified by the spacecraft. The interrelationship between commanding and the verification of a command in the Digital B is defined in Table 3.2.4-1. The column "Timing" specifies the maximum time delay between the arrival of a command in the instrument and change of the corresponding Digital B parameter.

In case a command does not induce a change in the instrument Digital B data, no execution verification of this command will be performed by the satellite.

The parameter value acquired apart from the routine HK cycle will be discarded after verification and not transmitted to ground. Execution failure will be reported in the history area.

In case of a command execution error by the SARR, the PLM NIU shall report this error to the ground and no autonomous corrective action, including SARR switch-off, shall be performed by the spacecraft.

	Command	Constraint	Command Verification Digital B	Timing
1	SARR Level Control A Bit 0		None	-
2	SARR Level Control A Bit 1		None	-
3	SARR Level Control A Bit 2		None	-
4	SARR Level Control A Bit 3		None	-
5	SARR Level Control A Bit 4		None	-
6	SARR Bus A Destination Bit 5		None	-
7	SARR Bus A Destination Bit 6		None	-
8	SARR Level Control B Bit 0		None	
9	SARR Level Control B Bit 1		None	
10	SARR Level Control B Bit 2		None	
11	SARR Level Control B Bit 3		None	
12	SARR Level Control B Bit 4		None	
13	SARR Bus B Destination Bit 5		None	
14	SARR Bus B Destination Bit 6		None	-
15	SARR AGC Enable / Disable A		None	-
16	SARR AGC Enable / Disable B		None	-
17	SARR Tx A On - Tx B Off		*SARR Tx Output RF Redundancy Switch* Status A	50 ms
18	SARR Tx B On - Tx A Off		SARR Tx *Output RF Redundancy Switch Status* B	50 ms

Table 3.2.4-I : Telecommand ***Verification (IL?)***

	Command	Constraint	Command Verification Digital B	Timing
19	SARR Conv. A On - Conv. B Off		None	
20	SARR Conv. B On - Conv. A Off		None	-
21	SARR 1211243 A On - 121/243 B Off		SARR 121 MHz Redundancy Switch Status A SARR 243 MHz Redundancy switch Status A	50 ms
22	SARR 121/243 B On - 121/243 A Off		SARR 121 MHz Redundancy Switch Status B SARR 243 MHz Redundancy Switch Status B	50 ms
23	SARR 406 A On - 406 B Off		SARR 406 MHz Redundancy Switch Status A	50 ms
24	SARR 406 B On - 406 A Off		SARR 406 MHz Redundancy Switch Status B	50 ms
25	SARR Execute Level Contrl A		None	-
26	SARR Execute Level Control B		None	-
27	SARR PTC A & Tx A Off		None	-
28	SARR PTC B & Tx B Off		None	-
29	SARR 406 A Off		None	-
30	SARR 406 B Off		None	-
31	SARR Tx A Enable/Disable		None	-
32	SARR Tx B Enable/Disable		None	-

Table 3.2.4-I : ***Telecommand Verification (2/2)***

33.5. METOP Specific Thermal Control Electrical Interfaces

The thermal control of the SARR is provided by the Thermal Control Unit (TCU), for both Receiver and Transmitter Pallets in both Off and On instrument modes.

335.1. Transmitter Pallet

The Transmitter Pallet is a Category B instrument with no specific thermal control electrical interface.

3.252. Receiver Pallet

The operational thermistor / heater hardware is accommodated within the SARR Receiver Pallet by the Instrument supplier and connected to the J07 connector. The thermistor (no redundancy) for the heater control is defined in § 3.5.2.1.2. The operational heater (no redundancy) is defined in § 2.3.

The survival thermostat / heater are provided by METOP and integrated outside the SARR Receiver Pallet : there is then no specific thermal control electrical interface with the SARR for this non-operational hardware.

3.2.6. Satellite Services/Synchronization

Note : Satellite Services are defined as all Command and Control tasks which will be performed by the PLM or the SVM to support instrument operations.

No synchronization signals will be provided by METOP.

3.3. MEASUREMENT DATA TRANSFER FUNCTIONAL DESCRIPTION

Not applicable for SARR : SARR Measurement Data interface exists with SAW-3 only.

Data on the SARP-3 output line to SARR are biphase L, Manchester coded, at a continuous data bit rate of 2400 bps. A bit "1" in the NRZ gives a 10 V down to 0 transition in the biphase (in the middle of the bit period). A bit "0" gives a 0 to 10 V up transition. The output level on the digital data line when the SARP-3 is OFF and bus power is ON will be a logic "0" (+ 10 V).

3.4. POWER ELECTRICAL INTERFACES

3.4.1. *Overview*

The SARR instrument requires the following power interfaces :

- A regulated *+28 Volt Main Bus* with high quality power as primary source for the instrument.
- A regulated *+28 Volt Switched TLM Bus* for powering temperature telemetry
- A regulated *+10 Volt Interface Bus* for powering of standard control interfaces in the instrument.
- In addition, operational heater power (Active Thermal Control Heater) is provided to the SARR Receiver Pallet through the JO7 connector for the METOP specific heater, and therefore only the connector and the thermistor interface circuit but not the electrical interface Data Sheets are defined in this section.(see also sect. 2.3.).

The +28 V Main Power Bus and the +28 V Switched TLM Bus are conditioned by the internally redundant Power Conversion Unit (PCU). The +28 V Main Power Bus is individually switched and protected. The +28 V Switched TLM Bus is powered whenever the PCU is on. The +10 V Interface Bus is provided by the NIU, and thermal control is performed by the TCU. This is illustrated in Fig. 3.4.1-1.

Fig. 3.4.1-2 gives details of the SARR internal power distribution.

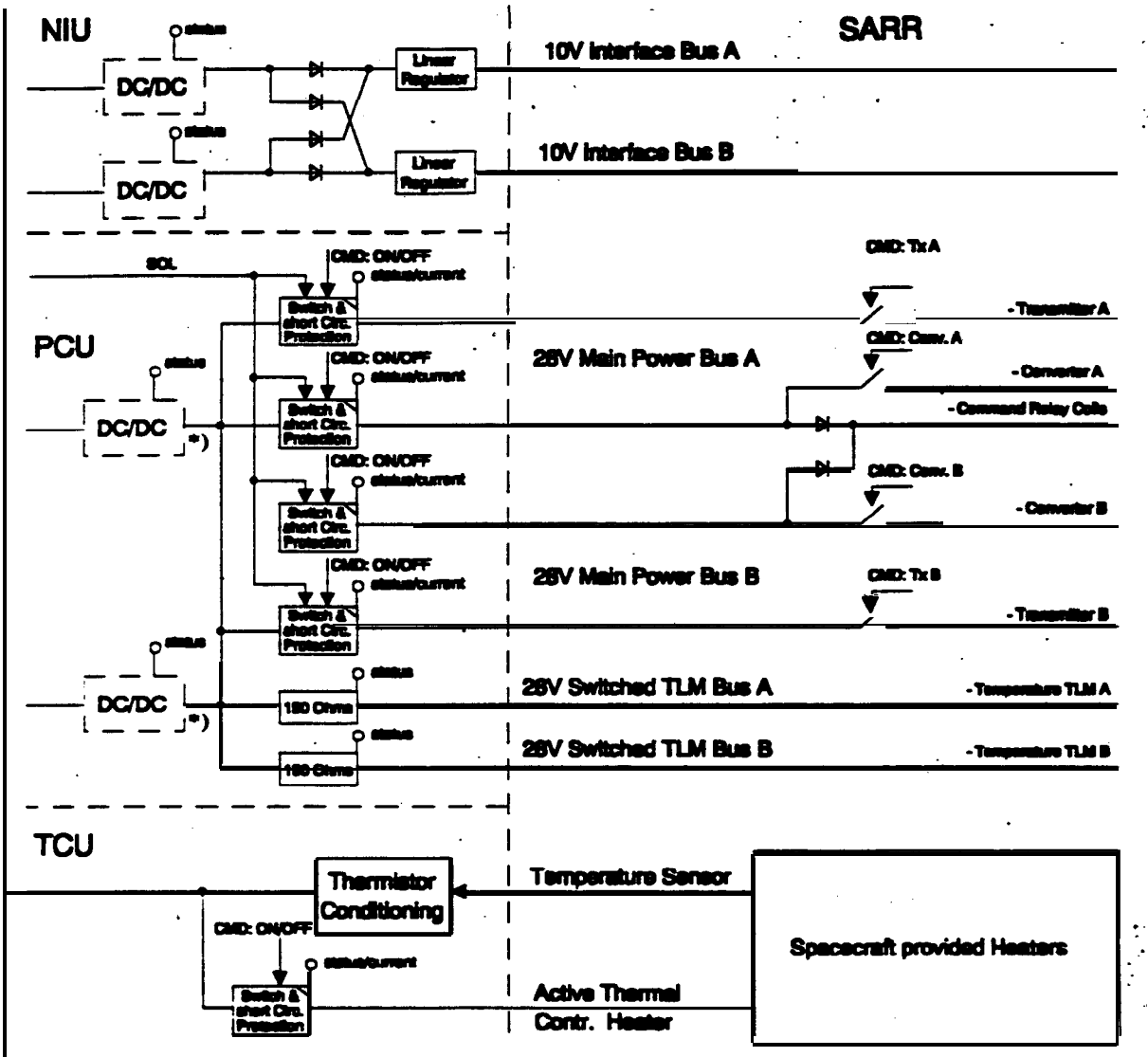

*) The two redundant DC/DC converters are cross-strapped to each PCU SARR output.

Fig. 3.4.1-Z : ***SARR*** *Power* ***Distribution Diagram***

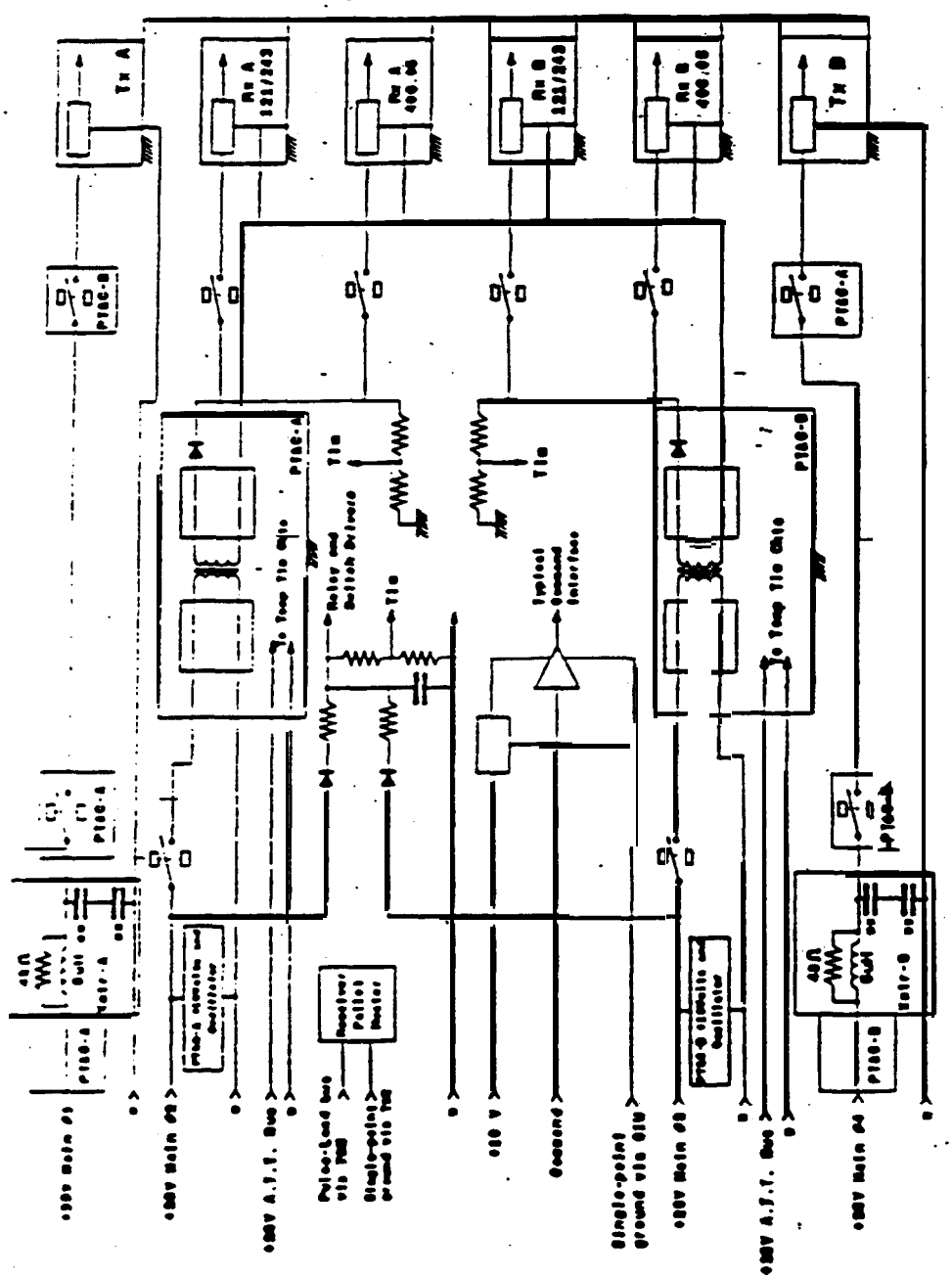

*Fig. **3.4.1-2 :** SARR **Internal** Power **Distribution Diagram***

3.43. Power Demand

The actual power demands for the SARR on the individual power busses for BOL & EOL during all modes and required outlet dimensions are defined in Table 3.4.2-l Power Data Sheet.

The heater power for the SARR units is not an instrument electrical interface and therefore not dealt within the following table.

Definitions

Typical Beginning of Life Power

Power expected to be measured during instrument acceptance test, = basic power.

Worst Case End of Life Power

Specified power the instrument shall never exceed (except in case of failure).

Mean Power

Steady *state power* consumed when the power bus is set at its mean voltage and with a 25 deg. C temperature.

Min / Max Power

Min. / max. steady state power consumed as a function of power bus input voltage and instrument temperature.

Peak Power

Total power consumed during a peak, i.e. corresponding to an event of finite duration during the considered functional mode. The peak power is given at mean power bus voltage and with a 25 deg. C temperature. The peak power is characterized by a peak duration and / or a peak repetition duty cycle.

Failure Power Consumption

Maximum permanent power that will be consumed without triggering an internal protection or without leading to a fuse blowing.

dP/dV @ 25 deg. C

Mean variation of the consumed power with respect to the input voltage.

Table 3.4.2-l : Power Consumption Data Sheet

SARR

dP/dV @ 25 deg. C

		Typical Beginning of Life (W)						Worst Case End of Life (W)						
Instr. Mode	Power Rus	Mean Power	Min. Power	Max. Power	Peak Power	Peak Duration	Peak Duty Cycle	Mean Power	Min. Power	Max. Power	Peak Power	Peak Duration	Peak Duty Cycle	Failure Power
Off Mode	28 V Main Bus	0		-	-	-	-	0	-	-	-	-	-	
	28 V Swit. TLM Bus	0 / 0.1 [3]	-	-	-	-	-	0 / 0.1	-	-	-	-	-	
	10 V Interface Bus	0		-	-	-	-	0	-	-	-	-	-	
	TOTAL	*0 / 0.1*	-	-	-	-	-	*0 / 0.1*	-	-	-	-	-	
On Mode	*28* V Main Bus [4]	46.80				-	-	48.30				-	-	
	28 V Swit. TLM Bus	0.10	-	-	-	-	-	0.10			-	-	-	
	10 V Interface Bus	0.03				-	-	0.04	-	-	-	-	-	
	TOTAL	*46.93*				-	-	*48.44*				-	-	

3 In Off Mode, the power consumption on the Switched Temperature Telemetry bus is 0.1 W when this bus is available at the instrument interface.

4 Assuming three receivers are operating.

3.4.3. Power Electrical Interface Requirements

In order to structure the electrical interfaces, all signals to be controlled by this document will be identified and classified into a certain number of signal types. For each signal type a three character identifier code is given as defined in the corresponding tables.

Table 3.4.3-1 shows the power interfaces used by the SARR and the corresponding data sheet identifiers.

	Data Sheet Code	Interface Circuit
+28 V Main Power Bus Rx A	CPB	Fig. 3.4.3.2-1a
+28 V Main Power Bus Rx B		
+28 V Main Power Bus Tx A		Fig. 3.4.3.2-1b
+28 V Main Power Bus Tx B		
+28 V Switched TLM Bus A	BPB	Fig. 3.4.3.2-2
+28 V Switched TLM Bus B		
+10 V Interface Bus A	DPB	Fig. 3.4.3.2-3
+10 V Interface Bus B		At connector J02 . (See § 3.5.2.)

Table 3.4.3-l : SARR *Power Interfaces* [5]

Within the Power Interface Data Sheets, the electrical characteristics of the power interfaces are defined.

3.4.3.1. Power Interface Data Sheets

On the following pages, the electrical characteristics of the power interfaces are defined with one Data Sheer per signal. In Table 3.4.3-l : '*SARR* Power Interfaces' and § 3.4.5 'Power Pin Allocation Lists' is referenced to these Data Sheets.

The performances specified in the Data Sheets are maintained during the mission lifetime and under nominal load and temperature range conditions. Source specifications have to be measuredatthe connector of the source and load specifications have to be measured at the connector of the load unless specified otherwise.

Parameter Definitions

Small Signal Impedance

Output impedance of the power supply tested with, compared to 28V, small AC signals.

---

5 The Heater Power Bus Data Sheet is not described in this ICD since it is not considered as an interface to SARR (see § 3.2.5.).

Output Impedance

Linear output impedance of the power supply.

Voltage Ripple

Sinusoidal voltage ripple, including repetitive spikes and voltage drop caused by the instruments current ripple.

Under-Voltage (incl. ripple & trans.)

The specified voltage range will be considered as under-voltage.

Over-Voltage (incl. ripple & trans.)

The specified voltage range will be considered as over-voltage

Transients

Positive or negative going, non repetitive spikes caused by load current changes.

Max Steady-State Current

Maximum power as defined in the Power Consumption Data Sheet divided by the minimum specified nominal voltage.

Current Ripple

Ripple caused by the load pulsed currents (DC/DC converter, stepper motors...).

Inrush Current

Maximum allowed input current for a restricted time, when the load is switched on

Inrush Current Rate

Rare-of-change of the input current over time when the load is switched 'on'.

Signal Nomenclature	28 V Main Power Bus	
Code	CPB	
EMC Class	Power	
Power Source Specification		
Parameter	Requirement	Remarks
Voltage	27.35 . . . 28.5 V	at SARR input
Small Signal Impedance	< 0.3 Ω	f < 100 kHz, short circuit protection & line < 0.1Ω
Voltage Ripple	See § 4.3.1.2.	
Under-Voltage (incl. ripple & trans.)	> 16 V ; < 27.35 V	for < 3 s
Over-Voltage (incl. tipple & trans.)	> 28.5 V ; < 38.0 V	for < 50 ms
Transients	See § 4.3.1.2	
Max. Current	< 5.0 A	Limited by short circuit protection
Leakage Current	< 6 mA	Short circuit protection 'Off'
Load Specification		
Parameter	Requirement	Remarks
Max. Steady-State Current	1.7 A	
Current Ripple	< 2% Max Steady-State Curr.	f < 100 kHz
Inrush Current	< 3 A_{pp}	Steady- State after 6 ms
Inrush Current Rate Rx Pallet	< 30 mA/µs	
Inrush Current Rate Tx Pallet	< 240 mA/µs	
Harness Design		
Parameter	Requirement	Remarks
Wiring Type	AWG 20, 4P	

Signal Nomenclature	+28 V Switched TLM Bus	
Code	BPB	
EMC Class	Power	
Power Source Specification		
Parameter	**Requirement**	**Remarks**
Voltage	27.35 . . . 28.5 v	at SARR input [6]
Small Signal Impedance	< 160 Ω	f < 100 kHz
Voltage Ripple	See § 4.3.1.2	
Under-Voltage (incl. ripple & trans.):	> 16.00 ; < 27.35 V	for < 3 s
Over-Voltage (incl. ripple & trans.):	> 28.5 ; < 38.00 V	for < 50 ms.
Transients	See § 4.3.1.2	
Load Specification		
Parameter	**Requirement**	**Remarks**
Max. Steady-State Current	8 mA	
Current Ripple	< 1 mA_{pp}	f < 100 kHz
Inrush Current	<150% of Max stdy-state Curr.	steady-state after 30 ms
Harness Design		
Parameter	**Requirement**	**Remarks**
Wiring Type	AWG 24. TP	

[6] Measured under no load condition.

Sii Nomenclature	+10 V Interface Bus	
Code	DPB	
EMC Class	Power	
Power Source Specification		
Parameter	**Requirement**	**Remarks**
Voltage	9.5 . . . 10.5 v	at SARR input
sourcecurrent	< 100 mA	
Small Signal Impedance	< 1 Ω	f < 10 MHz
Voltage Ripple	See § 4.3.1.2	
Under-Voltage (incl. ripple & trans.):	> 9.0 v ; < 9.5 v	
Over-Voltage (incl. ripple & trans.):	> 10.5 V ; < 15 V	
Voltage Transients	See § 4.3.1.2	
Load Specification		
Parameter	**Requirement**	**Remarks**
Max. Steady-State Current	8mA	
Current Ripple	< 1 mA_{pp}	f < 2.5 MHz
inrush Current	<125% of Max Stdy-State cur.	for < 60 ms
Harness Design		
Parameter	**Requirement**	**Remarks**
Wiring Type	AWG 24. TP	

3.433. Power Interface Circuits

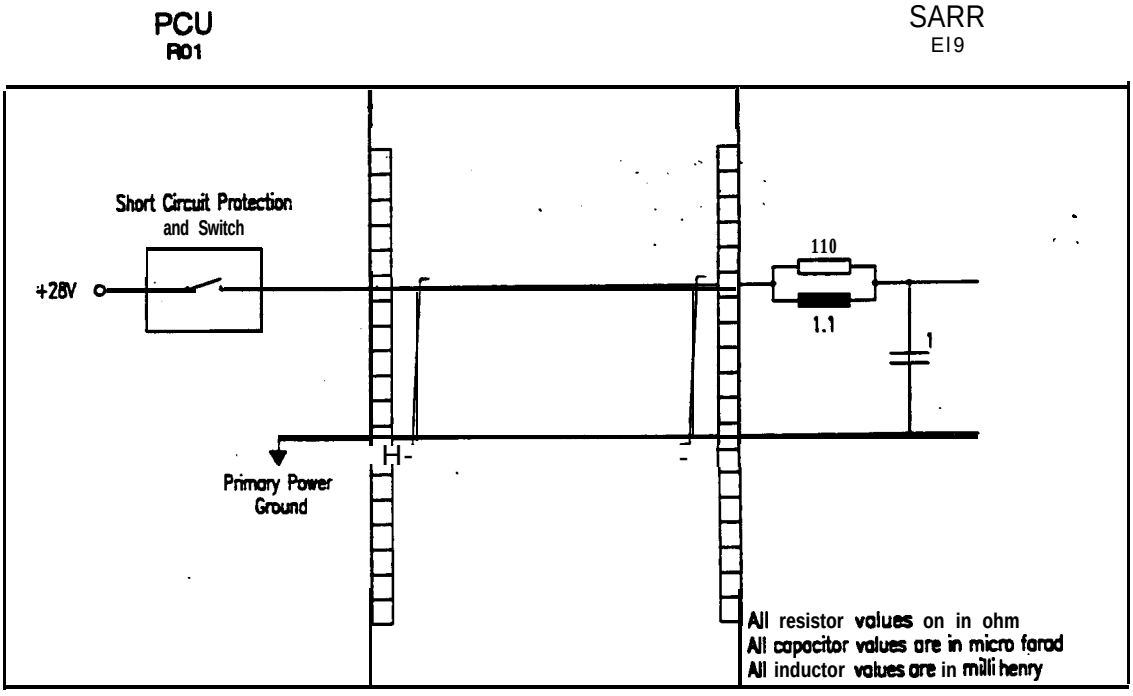

Fig. 3.4.3.2-1a : +28 V Main Power Bus Receiver Pallet Interface Circuit

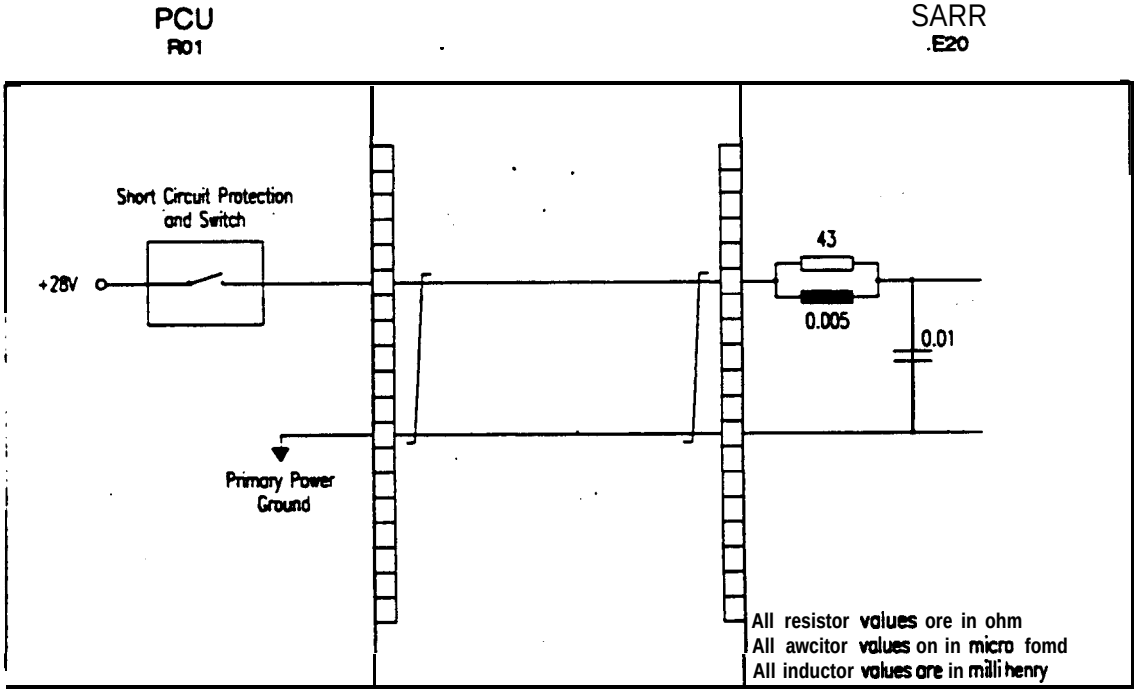

Fig. 3.4.3.2-1b : +28 V Main Power Bus Transmitter Interface Circuit

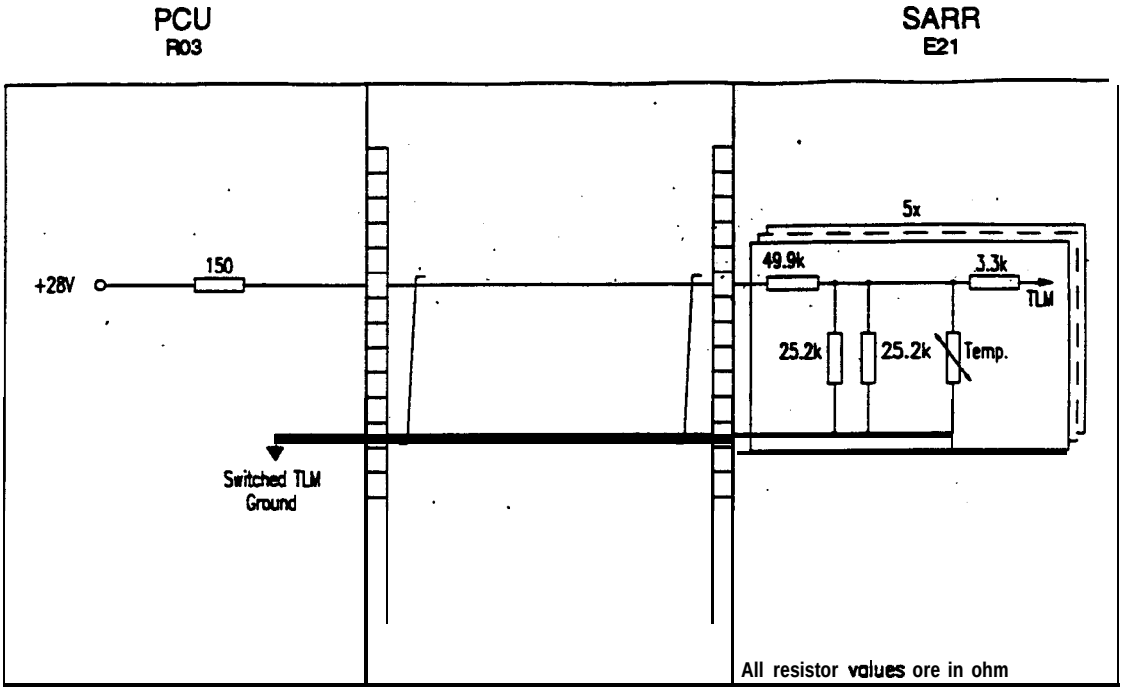

Fig. 3.4.3.2-2 : +28 V Switched TLM Bus Interface Circuit

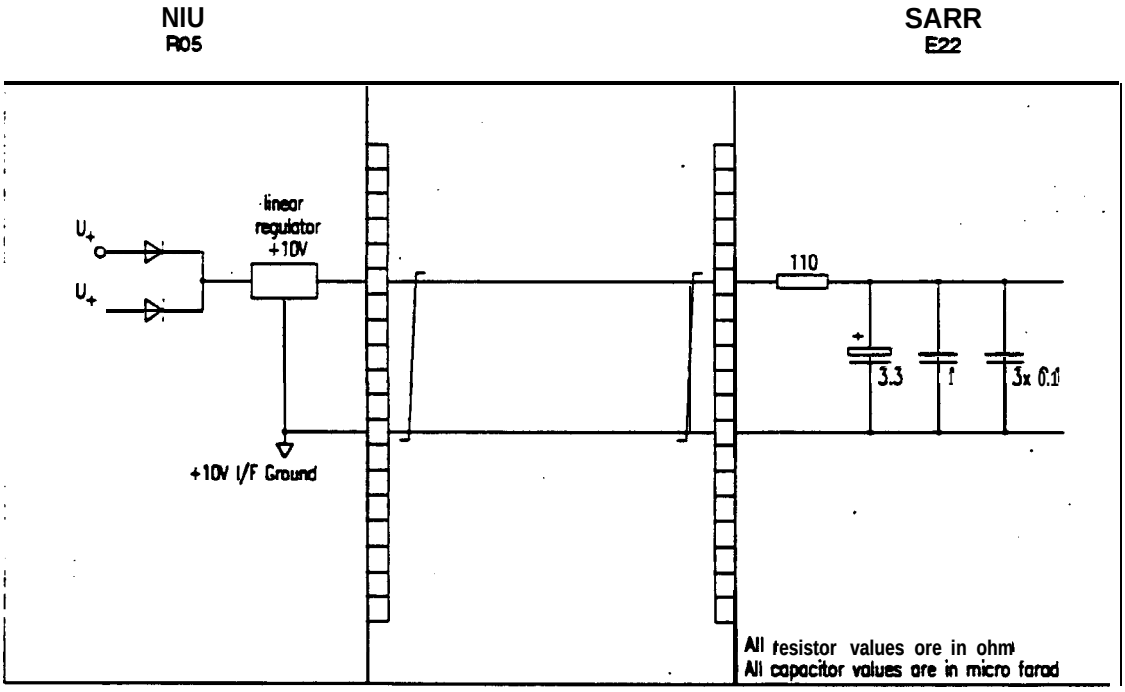

Fig. 3.4.3.2-3 : +10 V Interface Bus Interface Circuit

3.4.4. Power Connectors

Table 3.4.4-l identifies the power connector types at the SARR boxes and Table 3.4.4-2 identifies the power connector types at the SARR harness.

Connector	Connector-Type	Function
J01	DEMA-9P	Power Side A
J04	DEMA-9P	Power Side B
JO7	DAMA-15P	Heater TCU I/F

Table 3.4.4-l : *Power Connector Types at SARR Boxes*

Connector	Connector-Type	Function
PO1	DEMA-9S-NMB	Power Side A
P04	DEMA-9S-NMB	Power Side B
PO7	DAMA-15S-NMB	Heater TCU I/F

Table 3.4.4-2 : *Power Connector Types at SARR Harness*

3.45. Power Pin Allocation Lists

In these lists, the crass reference between connector pin, signal designation, Interface Data Sheet, target connector and target connector pin is defined and recorded as data base. Per connector one list is prepared_

Interface circuits of a unit are combined with the relevant interface circuit of the target connector.

Interface Data Sheets can be found in § 3.4.3.1.

The individual pin allocation lists are specified by 9 characters of a alpha numerical connector number. For the SARR the first 3 characters are SAR. The 7th character is J for a box connector or P for a harness connector. The last two characters define the connector number.

Since these lists also specify wiring and shielding, they will form the basis for harness manufacturing.

The power connector pin allocations at instrument level are described in Tables 3.4.5/1 to /3. The power connector harness are described in Tables 3.4.5/4 to /6.

Connector : 1SARXXXJ01 Item: SARR **Function :** Power A **Backshell : N/A**
EMC-Category : 1 **Conn.-Type : DEMA-09P**

Pin	Signal Designation	Interface-Code Circ	Signal	Pac.	Grouping Ch. ID	Shd	Cable	Twist	Comment	New
01	28VMainPwrTxBusA SAR .SUP1	E20	CPB- -	D	AB05				Pin 1 and Pin 5 are	
05	28VMainPwrTxBusA SAR .SUP1	E20	-	D					shorted at P-Conn.	
04	28VMainPwrTxBusA SAR .RTN1	E20	CPB- -	7	AB05					
02	28VMainPwrRxBusA SAR .SUP2	El9	CPB- -	D	AB07				Pin 4 and Pin 8 are	
08	28VMainPwrRxBusA SAR .RTN2	El9	CPB- -	7	AB07				shorted at P-Conn.	
03	+28V SwtTLM BusA SAR SUP	E21	BPB- -	D	BB04					
06	+28V SwtTLM BusA SAR .RTN	E21	BPB- -	7	BBW					
07	NC .-									
09	Chassis Gnd A SAR .-									

*Table **3.4.5/1** : Pin Allocation List of Connector **J01***

Connector : 1SARXXXJ04 **Item :** SARR **Function :** Power B **Backshell : N/A**
EMC-Category : 1 **Corm-Type : DEMA-09P**

Pin	Signal Designation	Interface-Code Circ	Signal	Pos.	Grouping Ch. ID	Shd	Cable	Twist	Comment	New
01	28VMainPwrTxBusB SAR .SUP1	E20	CPB- -	D	AB06				Pin 1 and Pin 5 are	
05	28VMainPwrTxBusB SAR .SUP1	E20	-	D					shorted at P-Conn.	
04	28VMainPwrTxBusB SAR .RTN1	E20	CPB- -	7	AB06					
02	28VMainPwrRxBusB SAR .SUP2	El9	CPB-	D	AB08				Pin 4 and Pin 8 are	
06	28VMainPwrRxBusB SAR .RTN2	El9	CPB- -	7	AB08				shorted at P-corn.	
03	+28V SwtTLM BusB SAR SUP	E21	BPB- -	D	BB05					
06	+28V SwtTLM BusB SAR .RTN	E21	BPB- -	7	BB05					
07	NC .-									
09	Chassis Gnd B SAR .-									

*Table **3.4.5/2** : Pin Allocation List of Connector JO4*

Connector : 1SARXXXJ07 **Item :** SARR **Function :** SARR Heater-TCU I/F **Backshell :** N / A
EMC-Category : 1 **Conn.-Type :** DAMA-15P

			Interface Code			Grouping					
Pin	Signal Designation		Circ	Signal	Pos.	Ch. ID	Shd	Cable	Twist	Comment	New
01	Act Th Ctl Htr SAR	SUP		EPB-	-	EB02					
03	Act Th Ctl Htr SAR	RTN		EPB-	-	EB02					
07	Temp Sensor SAR	SIG		TEM-	-	TM02					
05	Temp Sensor SAR	RTN		TEM-	-	TM02					
02	NC	-									
04	NC	-									
06	NC	-									
08	NC	-									
09	SC	-									
10	SC	-									
11	SC	-									
12	SC	-									
13	SC	-									
14	SC	-									
15	SC	-									

Table 3.4.93 **:** Pin *Allocation List of Connector JO7*

Connector : ISARXXXP01 Item : SAKK Function : Power A Conn.-Type : DEMA-09S-NMB
EMC-Category : I Location : TBD Backshell : TBD

Pin	Signal Designation		Interface-Code Circ	Signal	Pos.	Grouping Ch. III	Wiring	Shd	Cable Twist	Comment	End-It.	Loc.	Connector Pin	New
01	28VMainPwrTxBusA SAR	.SUP1	E20	CPB-	D	AB05	T4-20			Pin I xnd Pin 5 are	PCU	230	PCU230Pxx	
05	28VMainPwrTxBusA SAR	.SUP1	E20		D					shorted xl P-Conn				
04	28VMainPwrTxBusA SAR	.RTN1	E20	CPB-	7	AB05	T4-20				PCU	230	PCU230Pxx	
02	28VMainPwrRxBusA SAR	.SUP2	E19	CPB-	D	AD07	T4-20			Pin 4 and Pin 8 xrc	PCU	230	PCU230Pxx	
08	28VMainPwrRxBusA SAR	.RTN2	E19	CPB-	7	A007	T4-20			shorted at P-Conn.	PCU	230	PC11230 Pxx	
03	+28V SwtTLM BusA SAR	.SUP	E21	BPB-	D	BB04	'W-24				PCU	230	PCU230Pxx	
06	+28V SwtTLM BusA SAR	.RTN	E21	BPB-	7	BB04	'W-24				PCU	230	PCU230Pxx	
07	NC	.-												
09	Chassis Gnd A SAR	.-												

*Table **3.4.5/4 :** Pin Allocation List of Connector **P01***

***(For Information** Only)*

Connector : ISARXXXP04 Item : SARR Function : Power B Conn.-Type : DEMA-09S-NMB
EMC-Category : I Location : TBD Backshell : TBD

Pin	Signal Designation	Interface-Code Circ	Signal	Pa.	Grouping Ch. ID	Wiring	Shd	Cable	Twist	Comment	End-It.	La.	Connector	Pin	New
01	28VMainPwrTxBusB SAR .SUP1	E20	CPB-	- D	AB06	T4-20				Pin I and Pin 5 are	PCU	230	PCU230 Pxx		
05	28VMainPwrTxBusB SAR .SUP1	E20		- D						shorted at P-Conn.					
04	28VMainPwrTxBusB SAR .RTN1	E20	CPB-	- 7	AB06	T4-20					PCU	230	PCU230 Pxx		
02	28VMainPwrRxBusB SAR .SUP2	E19	CPB-	- D	AB08	T4-20				Pin 4 and Pin 8 are	PCU	230	PCU230 Pxx		
08	28VMainPwrRxBusB SAR .RTN2	E19	CPB-	- 7	AB08	'1'4.20				shorted at P-Conn.	PCU	230	PCU230 Pxx		
03	+28V SwtTLM BusB SAR .SUP	E21	BPB-	- D	BB05	TP-24					PCU	230	PCU230 Pxx		
06	+28V SwtTLM BusB SAR .RTN	E21	BPB-	- 7	BB05	TP-24					PCU	230	PCU230 Pxx		
07	NC .-														
09	Chassis Gnd B SAR .-														

*Table **3.4.5/5** : Pin Allocation **List** of Connector PO4*

(For Information Only)

Connector : ISARXXXP07 Item : SARR Function : SARR Heater-TCU IN Conn.-Type DAMA-15S-NMB
EMC-Category : I Location : TBD Backshell : TBD

Pin	Signal Designation		Interface Code Circ	Signal	Pm.	Grouping Ch. ID	Wiring	Shd	Cable	Twist	Comment	End-It.	Loc.	Connector Pin	New
01	Act Th Ctl Htr SAR	.SUP		EPB-	-	EB02	TP-20					TCU	230	TCU230 Rx	
03	Act Ill Ctl Htr SAW	.RTN		EPB-	-	EB02	w-20					TCU	230	TCU230 Pxx	
01	Temp Sensor SAR	.SIG		TEM-	-	TM02	TP-24					TCU	230	TCU230 Pxx	
05	Temp Sensor SAR	.RTN		TEM-	-	TM02	TP-24					TCU	230	TCU230 Pxx	
02	NC	.-													
04	NC	.-													
06	NC	.-													
08	NC	.-													
09	NC	.-													
IO	NC	.-													
11	NC	.-													
12	NC	.-													
13	NC	.-													
14	NC	.-													
15	NC	.-													

*Table **3.4.5/6 :** Pin Allocation **List** of Connector PO7*

*(For Information **Only**)*

3.5. SIGNAL ELECTRICAL INTERFACES

35.1. Overview

An overview on the SARR signal interfaces is presented in figure 35-l.

Signal interfaces with the PLM units are specified in § 3.5.2.

Signal interfaces with the SARP-3. the RFF, and the SLA are specified in § 3.5.3.

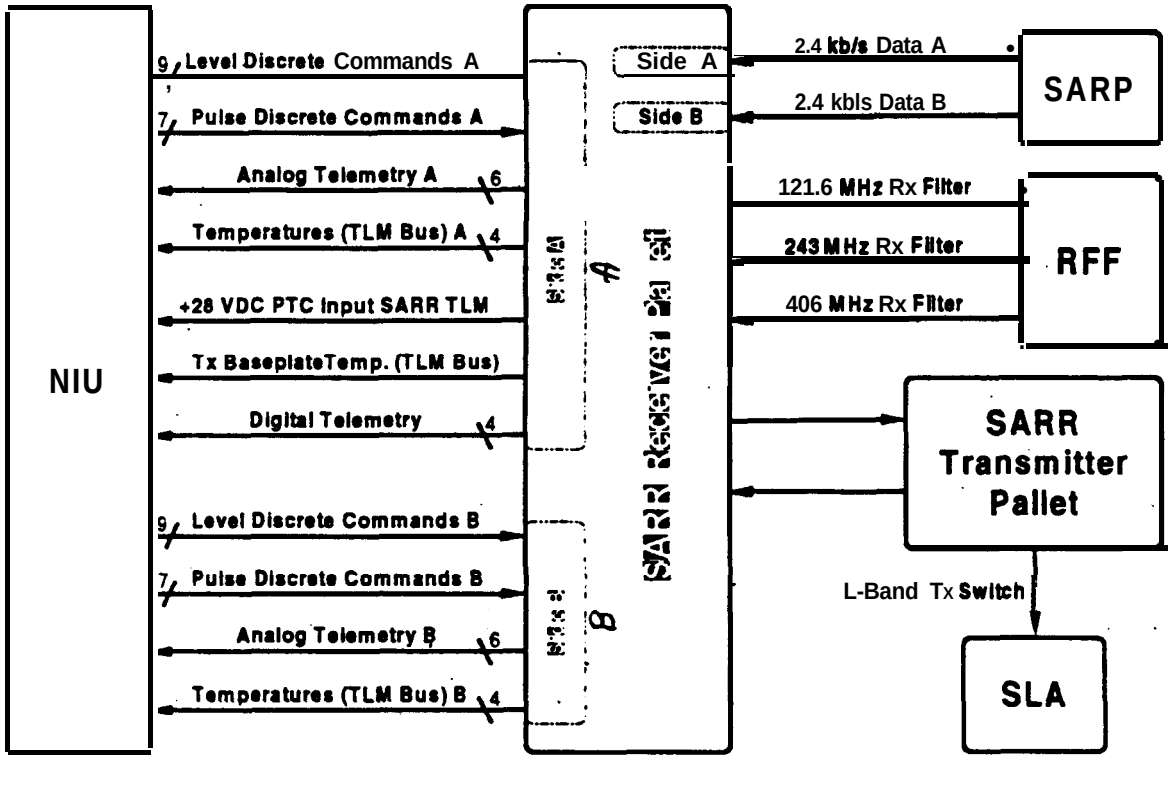

*Fig. **3.5-1** : SARR **Signal Interfaces***

35.2. Signal Interfaces With PLM Units

353.1. Signal Electrical Interface Requirements (Interfaces With PLM Units)

Table 3.5.2.1-I lists all signals of the SARR signal electrical interface with the PLM and gives references to the Interface Data Sheets in § 3.5.2.1.1 and the interface circuits in § 3.5.2.1.2[1].

---

[1] The Temperature Sensor Interface Data Sheet is not described in this ICD since it is not considered as an interface to SARR (see § 32.5.).

Table 3.5.2.1-l : Signal to Data Sheets & Interface Circuits Assignments (1/2)

Signal	Data Sheet Code	Interface Circuit	Remarks
Tx A On - Tx B Off SARR Conv.A On - Conv.B Off SARR 121/243 A On - 121/243 B Off SARR 406 A On - 406 B Off SARR Execute Level Control A SARR PTCB & Tx B Off SARR 406 Rx A Off SARR Tx B On - Tx A Off SARR Conv.B On - Conv.A Off SARR 121/243 B On - 1211243 A Off SARR 406 B On - 406 A Off SARR Execute Level Control B SARR PTC A & Tx A Off SARR 406 Rx B Off SARR	CCP	Fig. 3.5.2.1.2-1	Pulse Discrete command
Level Contr. A Bit 0 SARR Level Contr. A Bit 1 SARR Level Contr. A Bit 2 SARR Level Contr. A Bit 3 SARR Level Contr. A Bit 4 SARR Bus A Destin. Bit 5 SARR Bus A Destin. Bit 6 SARR AGC A Dsbl./ Enbl. SARR Tx A Enbl. SARR Level Contr. B Bit 0 SARR Level Contr. B Bit 1 SARR Level Conu. B Bit 2 SARR Level Contr. B Bit 3 SARR Level Contr. B Bit 4 SARR Bus B Destin. Bit 5 SARR Bus B Destin. Bit 6 SARR AGC B Dsbl./ Enbl. SARR Tx B Enbl. SARR	CCL	Fig. 3.5.2.1.2-1	Level Discrete Command
12 1 MHz RF Redund.Sw.TLM SARR 243 MHz RF Redund.Sw.TLM SARR 406 MHz RF Redund.Sw.TLM SARR Tx Output RF Redund.Sw.TLM SARR	TLD	Fig. 3.5.2.1.2-2	Digital B HK Telemetry

Table 3.5.2.1-I : Signal to Data Sheets & Interface Circuits Assignments (2/2)

Signal	Data Sheet Code	Interface Circuit	Remarks
PTC A Temp. SARR Tx A Power Ampl. Temp. SARR 121/243 Rx A Loc.Osz. Temp. SARR 406 Rx A Loc.Osz. Temp. SARR Tx Baseplate Temp. SARR PTC B Temp. SARR Tx B Power Ampl. Temp. SARR 121/243 Rx B Loc.Osz. Temp. SARR 406 Rx B Loc.Osz. Temp. SARR		Fig. 3.5.2.1.2-3	Temperatures (Switched TLM Bus)
+28 VDC PTC Input SARR		Fig. 3.5.2.1.24	Analog HK Telemetry
+16 VDC (Conv.A) SARR +16 VDC (Conv.B) SARR	TLA	Fig. 3.5.2.1.2-5	Analog HK Telemetry
Tx A Output Power SARR Tx B Output Power SARR		Fig. 3.5.2.1.2-6	
Tx A RF Driver Curr. SARR Tx B RF Driver Curr. SARR		Fig. 3.5.2.1.2-7	
121 AGC Volts - Rx A SARR 243 AGC Volts - Rx A SARR 406 AGC Volts - Rx A SARR 121 AGC Volts - Rx B SARR 243 AGC Volts - Rx B SARR 406 AGC Volts - Rx B SARR		Fig. 3.5.2.1.2-8	

3.5.2.1.1. Signal Elecuical Interface Data Sheets (Interfaces With PLM Units)

On the following pages the electrical characteristics of the signal electrical interfaces are defined with one Data Sheer per signal. In § 3.5.2.1 'Signal Electrical Interface Requirements' and § 3.5.2.3 'Signal Pin Allocation Lists' is referenced to these Data Sheets.

The performances specified in the Data Sheets are maintained during the mission lifetime and under nominal load and temperature range conditions. Source specifications have to be measured at the connator of the source and load specifications have to be measured at the connector of the load unless specified otherwise.

The Fault Voltage Protection is the maximum externally induced voltage that the specified input or output can withstand without damage. The Fault Voltage Emissions is the maximum internally generated voltage that the specified input or output can create under worst case fault conditions.

Signal Nomenclature	Level Discrete Commands	
Code	CCL	
EMC Class	Signal	
Source Circuit Specification		
Parameter	**Requirement**	**Remarks**
'1'-Level (= True = 0 VDC)	-0.2 ... +0.2 V	line to 10 V I/F ground
'0'-Level (= False = 10 VDC ; V_{OH})	+9.3 ... +10.7 V	line to 10 V I/F ground
Rise Time 10% to 90%	< 12 µs	cable length < 5 m
Fall Time 90% to 10%	< 12 µs	cable length < 5 m
Output Impedance	< 1.5 kΩ	R (CMOS output) + 200 Ω
Source Current	> 1 mA	@ V_{OH} = 9.5 V
Fault Voltage Emissions	0 V ... V_{DD}	R_S > 100 Ω
Fault Voltage Protection	-0.5 V ... V_{DD} + 0.5 V	V_{DD} see Note
Load Circuit Specification		
Parameter	**Requirement**	**Remarks**
'1' - Level	-0.5 ... +2 V	line to 10 V I/F ground
'0' - Level	+8.0 ... +10.8 V	line to 10 V I/F ground
Sink Current	< 1 mA	
Input Impedance	>90 kΩ	
Fault Voltage Emissions	0 V ... V_{DD}	R_S > 100 Ω
Fault Voltage Protection	-0.5 V ... V_{DD} + 0.5 V	V_{DD} see Note
Harness Design		
Parameter	**Requirement**	**Remarks**
Wiring Type	AWG 24, single line	return via +10 V I/F ground

Note: V_{DD} is the common supply voltage for the source and the load circuit.
Definition of V_{DD}: see Data Sheet '+ 10 V Interface Bus - DPB' in § 3.4.3.1.

Signal Nomenclature	Pulse Discrete Commands (Short)	
Code	CCP	
EMC Class:	Signal	
Source Circuit Specification		
Parameter	Requirement	Remarks
'1' - Level (= True = 0 VDC)	-0.2 . . . +0.2 v	line to 10 V I/F ground
'0'-Level (= False = 10 VDC ; V_{OH})	+9.3 . . . +10.7 v	line to 10 V I/F ground
Rise Tie 10% to 90%	< 12 µs	cable length c 5 m
Fall Time 90% to 10%	< 12 µs	cable length < 5 m
Pulse Duration	55 . . . 65 ms	'1' - Level
Output Impedance	< 1.5 kΩ	R (CMOS output) + 200 Ω
Source Current	> 1 mA	@ V_{OH} = 9.5 V
Fault Voltage Emissions	0 v . . . V_{DD}	R_S > 100 Ω
Fault Voltage Protection	-0.5 V . . . V_{DD} + 0.5 V	V_{DD} defined in Data Sheet CCL
Load Circuit Specification		
Parameter	Requirement	Remarks
'1' - Level	-0.5 . . . +2 v	line to 10 V I/F ground
'0' - Level	+8.0 . . . +10.8 V	line to 10 V I/F ground
Sink Current	< 1 mA	
Input Impedance	> 90 kΩ	
Fault Voltage Emissions	0 v . . . V_{DD}	R_S > 2 kΩ
Fault Voltage Protection	-0.5 V . . . V_{DD} + 0.5 V	V_{DD} defined in Data Sheet CCL
Harness Design		
Parameter	Requirement	Remarks
Wiring Type	AWG 24, single line	return via +10 V I/F ground

Signal Nomenclature	Analog HK Telemetry	
Code	TLA	
EMC Class	Signal	
Source Circuit Specification		
Parameter	**Requirement**	**Remarks**
Voltage Range	0 . . . 5.12 V	load > 2 MΩ
Spectral Frequency Range	0 . . . 200 Hz	for f > 200 Hz filter required ; sampling rate see under Load
Output Impedance	2 kΩ ... 15 kΩ	
Source Current	> 3 µA	
Fault Voltage Protection	-15 . . . +15 v	R_S > 2 kΩ
Fault Voltage Emissions	-15 . . . +15 v	R_S > 2 kΩ
Load Circuit Specification		
Parameter	**Requirement**	**Remarks**
Input Voltage Range	0 . . . 5.12 V	Line to return
Sampling Rate	0.125 . . . 16 s	
Conversion Resolution	8 bit	20 mV/LSB
Measurement Accuracy	20mV	
Sink Current	< 3 µA	
Fault Voltage Protection	-15 . . . +15 v	
Fault Voltage Emissions	-15 . . . +15 v	R_S > 2 kΩ
Input Impedance	> 2 MΩ	
Harness Design		
Parameter	**Requirement**	**Remarks**
Wiring Type	AWG 24, Single Line	Return via Signal Ground or Sw. TLM Ground (See Interface Circuit)

Signal Nomenclature	Digital B Telemetry	
Code	TLD	
EMC Class	Signal	
Source Circuit Specification		
Parameter	Requirement	Remarks
'1' - Level	-0.1 ... +0.5 v	Ground reference
'0' - Level	+3.5 ... +5.7 V	See interface circuit
Spectral Frequency Range	0 . . . 200 Hz	for f > 200 Hz filter required ; sampling rate see under Load
Output Impedance	2 kΩ ... 15 kΩ	
Source Current	> 60 µA	
Fault Voltage Emissions	-15 . . . +15 v	R_S > 0.2 kΩ
Fault Voltage Protection	-15 . . . +15 v	R_S > 0.2 kΩ
Load Circuit Specification		
Parameter	Requirement	Remarks
'1' - Level	-0.2 ... +0.8 V	line to 10 V I/F ground
'0' - Level	+3.0 . . . +5.7 v	line to 10 V I/F ground
Sink Current	< 60 µA	
Sampling Rate	0.125 . . . 16 s	
Fault Voltage Emissions	-15 . . . +15 v	R_S > 0.2 kΩ
Fault Voltage Protection	-15 . . . +15 v	
lnput Impedance	>100 kΩ	
Harness Design		
Parameter	Requirement	Remarks
Wuing Type	AWG 24, single line	return via Power Ground (via PCU)

3.5.2.1.2. Signal Interface Circuits (Interfaces With PLM Units)

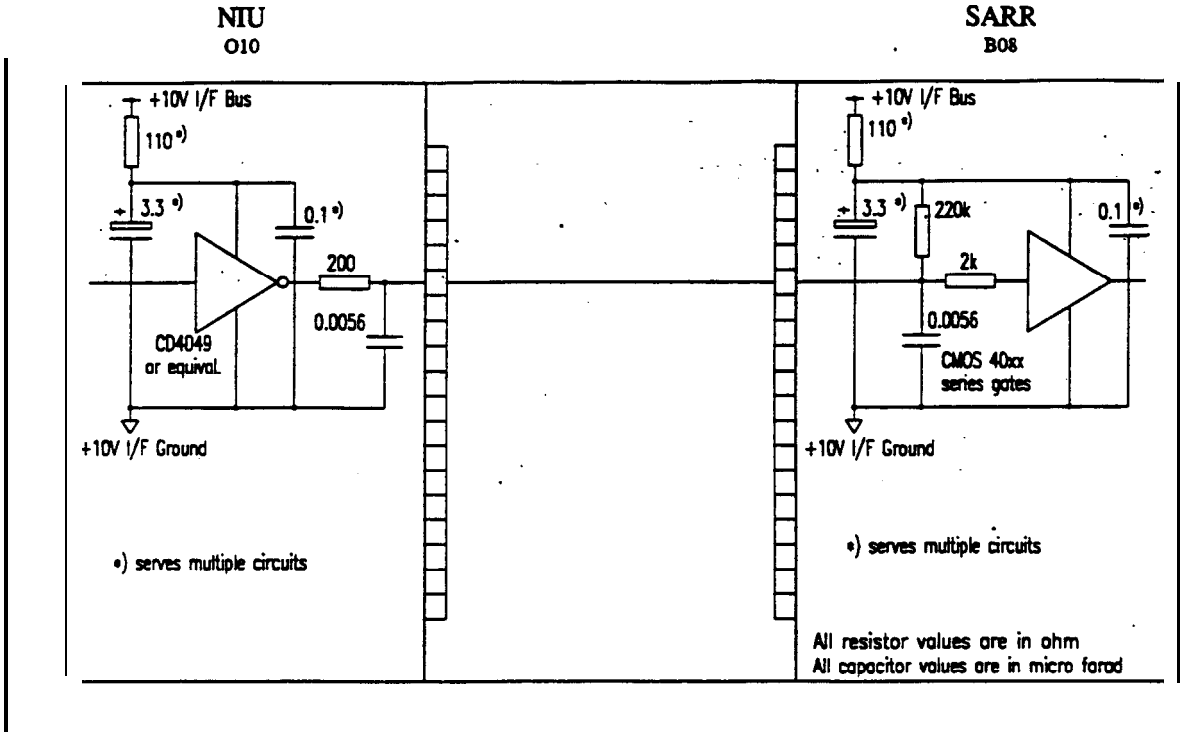

*Fig. 3.5.2.1.2-1 : SARR **Pulse / Level** Discrete **Commands Interface** Circuit*

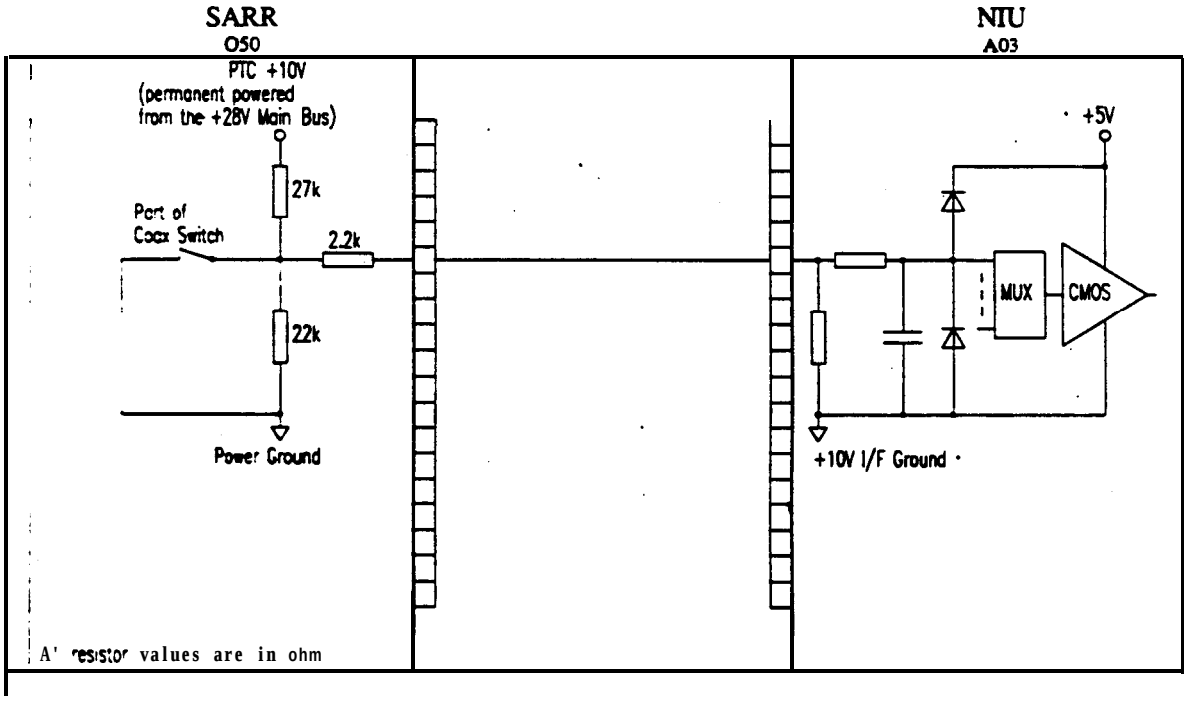

*Fig. 3.5.2.1.2-2 : SARR Typical **Digital** B **Telemetry Interface** Circuit*

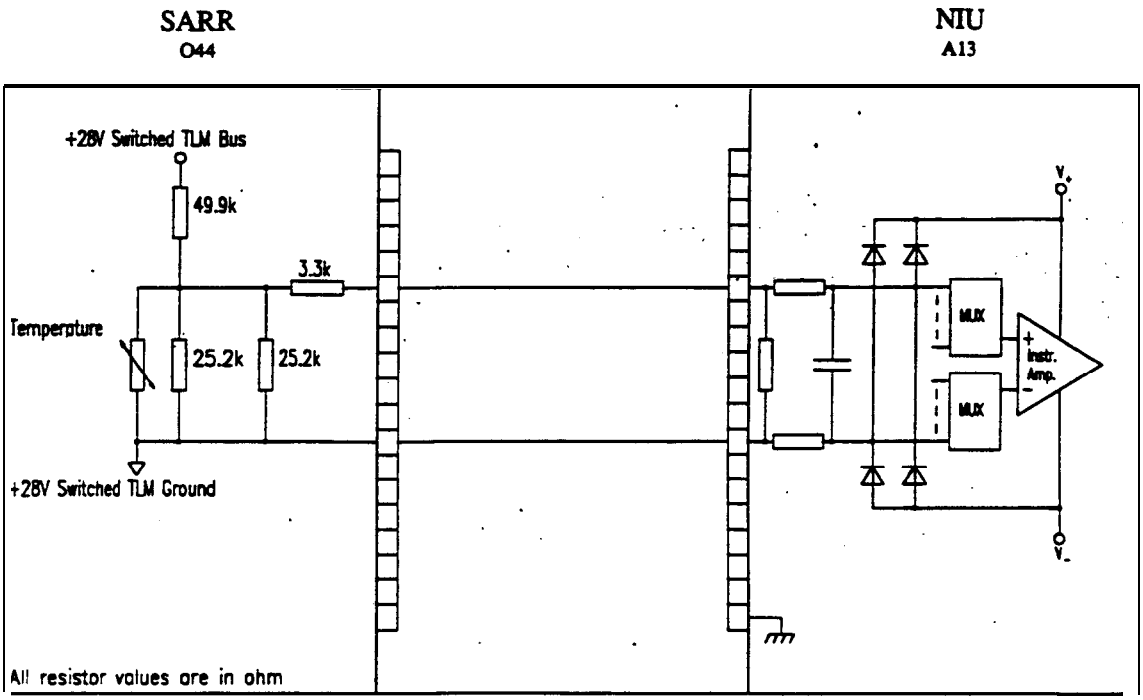

Only one +28 V Switched TLM ground line is provided from SARR for all interfaces

*Fig. **3.5.2.1.2-3 : SARR** Temperature **Telemetry Interface Circuit***

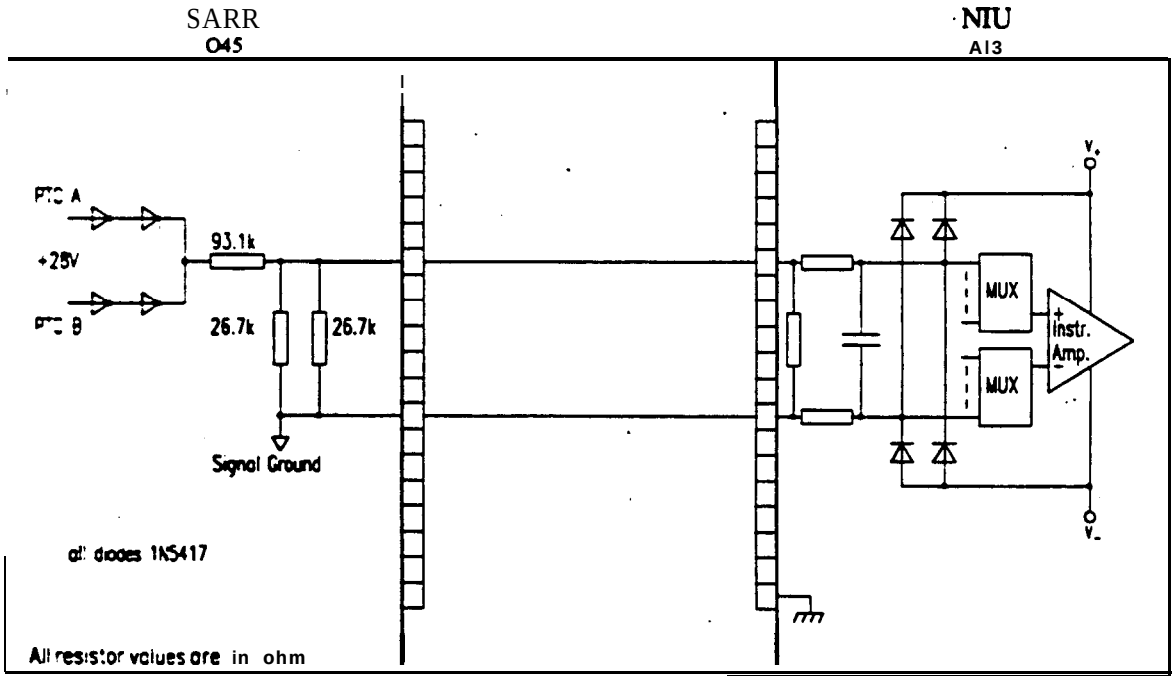

Only one Signal Ground line is provided from SARR for all interfaces

*Fig. **3.5.2.1.2-4 : SARR PTC** Input **Telemetry Interface** Circuit*

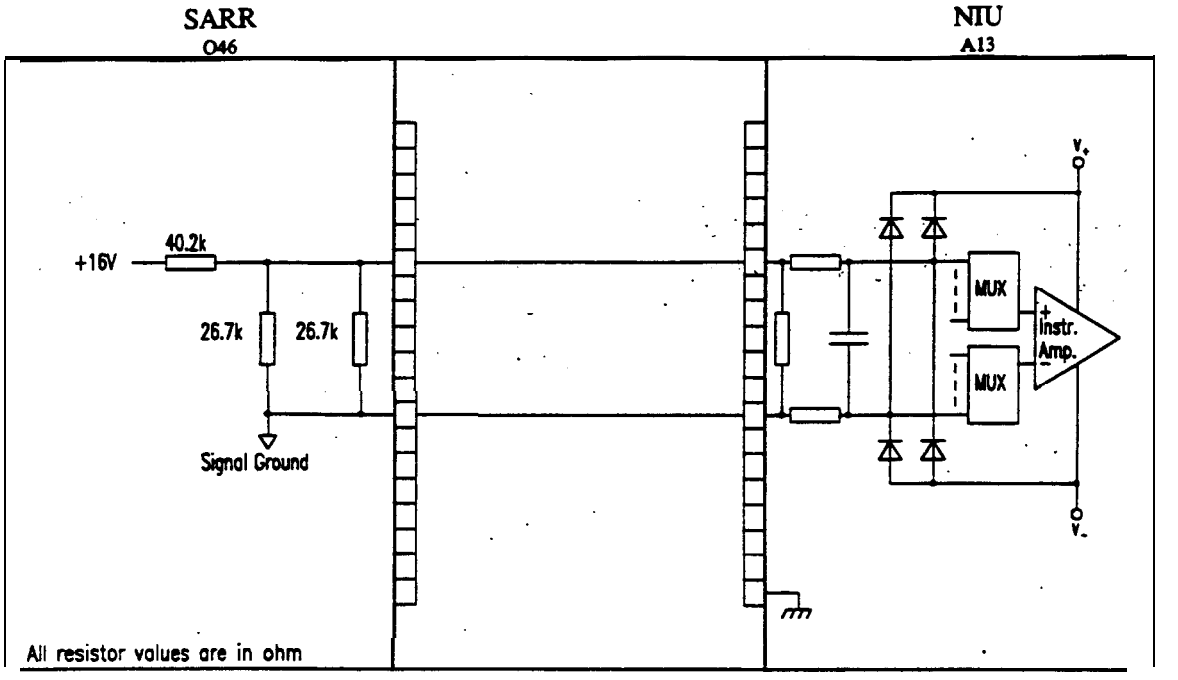

Only one Signal Ground line is provided from SARR for all interfaces

Fig. 3.X2.1.2-5 : SARR *+16 V* ***Converter Telemetry Interface*** *Circuit*

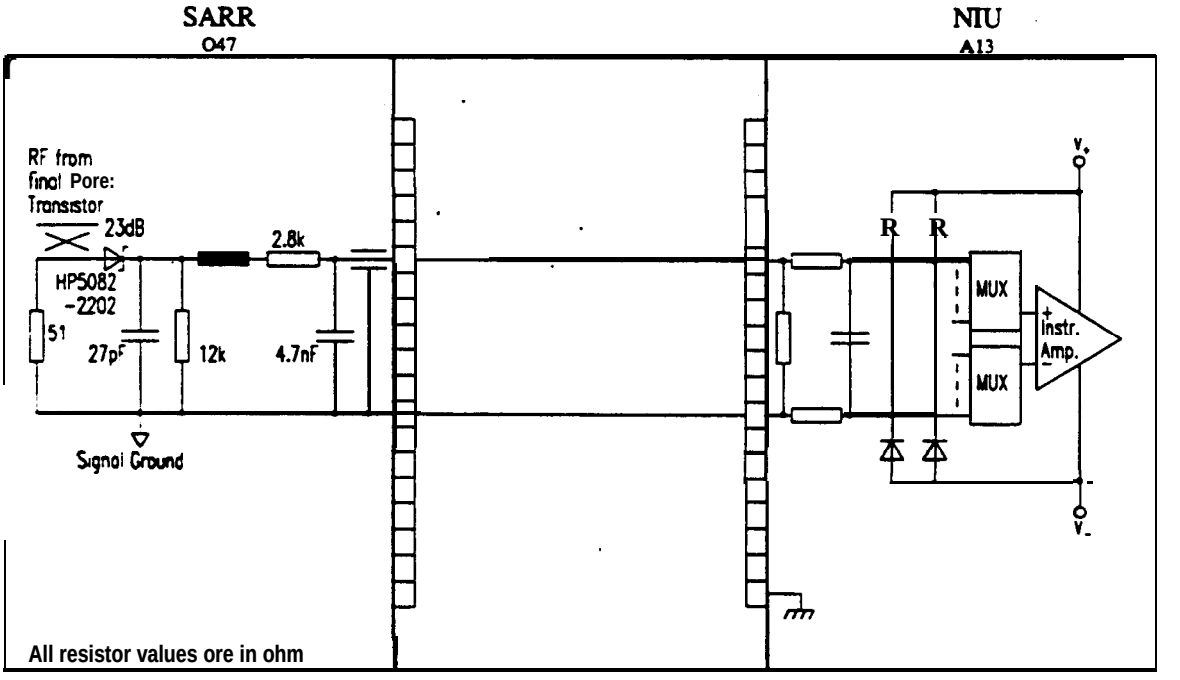

Only one Signal Ground line is provided from SARR for all interfaces

Fig. ***3.5.2.1.2-6 :*** *SARR Tx Output Power Telemetry* ***Interface*** *Circuit*

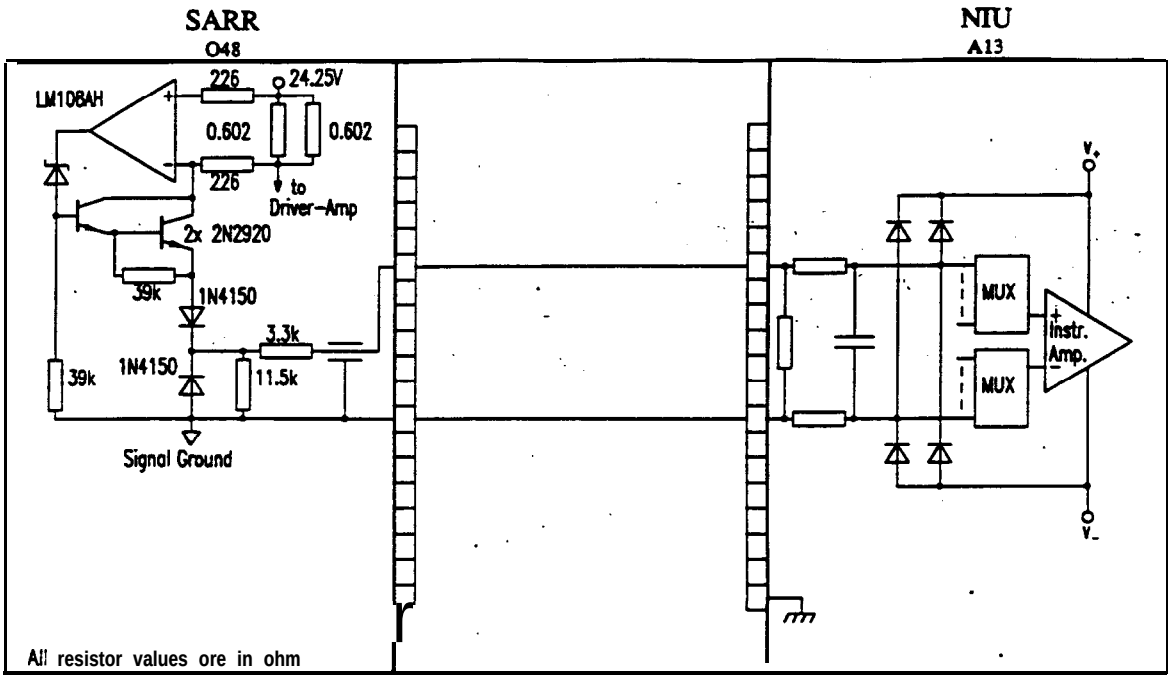

Only one Signal Ground line is provided from SARR for all interfaces

*Fig. 3.5.2.1.2-7 : **SARR Driver Current Telemetry Interface** Circuit*

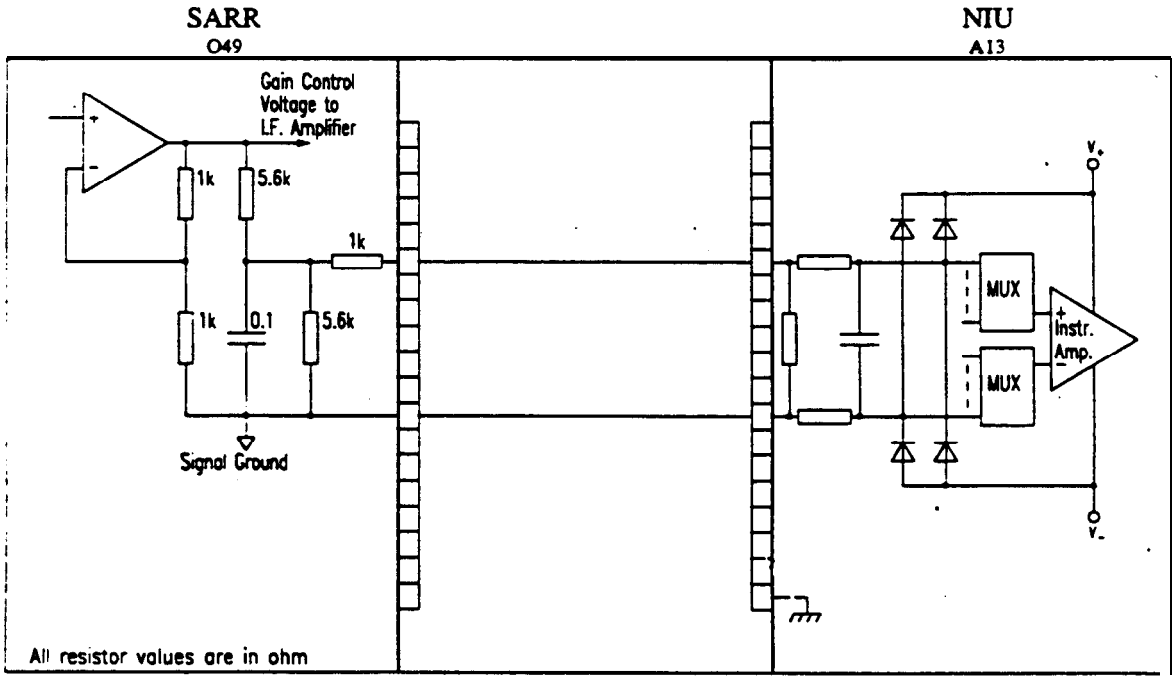

Only one Signal Ground line is provided from SARR for all interfaces

*Fig. 3.5.2X2-8 : SARR **AGC Telemetry Interface** Circuit*

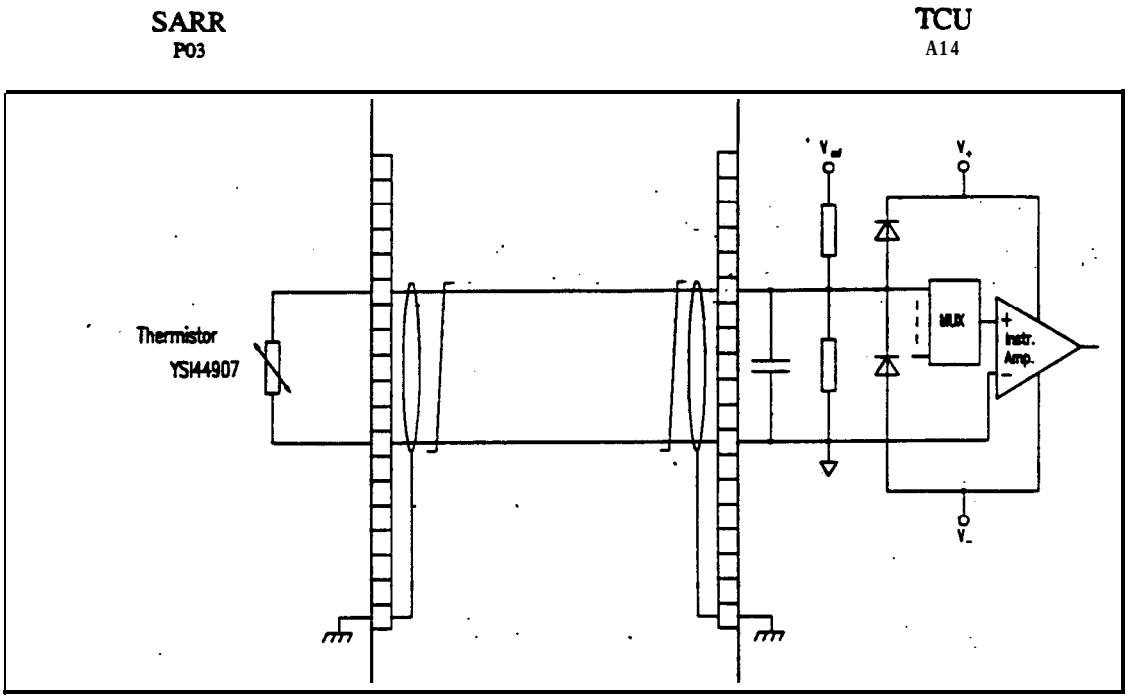

*Fig. **3.5.2.1.2-9** : **SARR** Temperature Sensor **Interface Circuit***

3.533. Signal Connectors (Interfaces With PLM Units)

Table 3.5.22-l identifies the signal electrical connector types at the SARR boxes and Table 3.5.2.2-2 identifies the signal electrical connector types at the SARR harness.

Connector	Connector-Type	Function
JO2	DBMA-25P	Command Side A
J O 3	DBMA-25S	Telemeuy Side A
J05	DBMA-25P	Command Side B
J06	DBMA-25S	Telemetry Side B

Table 3.5.2.2-I : Signal *Connector Types at SARR Boxes for Interfaces With PLM*

Connector	Connector-Type	Function
PO2	DBMA-25S-NMB	*Command* Side A
PO3	DBMA-25P-NMB	Telemeuy Side A
PO5	DBMA-25S-NMB	Command Side B
P06	DBMA-25P-NMB	Telemeuy Side' B

Table *3.5.2.2-2 : Signal Connector Types at SARR Harness for Interfaces With PLM*

35.23. Signal Pin Allocation Liik (Interface With PLM Unik)

In these lists. the cross reference between connector pin, signal designation, Interface Data Sheet, target connector *and* target *connector* pin is defined and recorded as data base. Per connector one list is prepared.

Interface circuits of a unit are combined with the relevant interface circuit of the target connector.

Interface Data Sheets can be found in § 3.5.2.1.1.

The individual pin allocation lists are specified by 9 characters of a alpha numerical connector number. For the SARR the first 3 characters are SAR. The 7th character is J for a box connector or P for a harness connector. The last two characters define the connector number.

Since these lists also specify the wiring and shielding, they also form the basis for harness manufacturing.

The signal connector pin allocations at instrument level are described in Tables 3.5.2.3/1 to /4. The signal connector harness are described in Tables 3.5.2.3/5 to /8.

Connector : 2SARXXXJ02 **Item :** SARR **Function :** Command A **Backshell :** N/A
EMC-Category : 2 **Conn.-Type :** DBMA-25P

Pin	Signal Designation		Interface-Code Circ	Signal	Pos.	Grouping Ch. ID	Shd	Cable	Twist	Comment	iew
01	+10V I/F Bus A SAR	SUP	E22	DPB-	- D	DB05					
02	+10V I/F Bus A SAR	.RTN	E22	DPB-	- 7	DB05					
03	PTC B-& Tx B Off SAR	SIG	B08	CCP-	- D	CP59					
04	Execute LvlCtl A SAR	SIG	B08	CCP-	- D	CP60					
05	TX A On-Tx B Off SAR	SIG	B08	CCP-	- D	CP61					
06	121/243RxAOn-BOffSAR	SIG	B08	CCP-	- D	CP62					
07	406 Rx A Off SAR	SIG	B08	CCP-	- D	CP63					
08	Conv A On - BOff SAR	SIG	B08	CCP-	- D	CP64					
09	406 A On - B Off SAR	SIG	B08	CCP-	- D	CP65					
10	2.4kb/s DataInA SAR	SIG	B13	DAS-	- D	DAS1					
11	NC	.-									
12	Tx A En/Dis SAR	SIG	B08	CCL-	- D	a 1 9					
13	AGC A Dis SAR	SIG	B08	CCL-	- D	CL20					
14	Level Cd A Bit0 SAR	SIG	B08	CCL-	- D	CL21					
15	Level Ctl A Bit1 SAR	SIG	B08	CCL-	- D	a 2 2					
16	Level Ctl A Bit2 SAR	SIG	B08	CCL-	- D	C u 3					
17	Level Ctl A Bit3 SAR	.SIG	B08	CCL-	- D	a 2 4					
18	Level Ctl A Bit4 SAR	SIG	B08	CCL-	- D	CL25					
19	Bus A Dest Bit5 SAR	SIG	B08	CCL-	- D	CL26					
20	Bus A Dest Bit6 SAR	SIG	B08	CCL-	- D	a 2 7					
21	SC	.-									
22	SC	.-									
23	SC	.-									
24	NC	.-									
25	Chassis Gnd A SAR	.-									

Table ***3.5.2.3/1 :*** **Pin** *Allocation List of Connector JO2*

Connector: 2SARXXXJ03 **Item :** SARR Function : Telemetry A **Backshell :** N/A
EMC-Category : 2 **Conn.-Type :** DBMA-25S

Pin	Signal Designation		Interface-Code Circ	Signal	Pos.	Grouping Ch. ID	Shd	Cable	Twis	Comment	New
01	PTC A Temp SAR	SIG	O44	TLA-	- D	TA90					
02	28V DC PTC Input SAR	SIG	O45	TLA-	- D	TA91					
03	NC	-									
04	16V DC(Conv A) SAR	SIG	O46	TLA-	-D	TA92					
05	Tx A Output Pwr SAR	SIG	O47	TLA-	- D	TA93					
06	Tx A PwrAmplTemp SAR	SIG	044	TLA-	-D	TA94					
07	Tx A RF Drv Curr SAR	SIG	048	TLA-	- D	TA95					
08	121AGC Volts-RxA SAR	SIG	D49	TLA-	- D	TA96					
09	243AGC Volts-RxA SAR	SIG	D49	TLA-	- D	TA97					
10	406AGC Volts-RxA SAR	SIG	D49	TLA-	- D	TA98					
11	121/243RxALocOszTemp	SIG	D44	TLA-	- D	TA99					
12	406RxALocOszTemp SAR	SIG	D44	TLA-	- D	TAA0					
13	Tx BaseplateTemp SAR	SIG	D44	TLA-	- D	TAA1					
14	NC	-									
15	NC	-									
16	SC	-									
17	SC	-									
18	SC	-									
19	SC	-									
20	SC	-									
21	121MHzRFReduSwtTLM	SIG	D50	TLD-	- D	TD64					
22	243MHzRFReduSwtTLM	SIG	D50	TLD-	- D	TD65					
23	406MHzRFReduSwtTLM	SIG	D50	TLD-	- D	TD66					
24	TxOutRFReduSwtTLMSAR	SIG	D50	TLD-	- D	TD67					
25	Chassis Gnd A SAR	-									

Table 3.5.2.3/2 : Pin Allocation List of Connector JO3

Connector : 2SARXXXJ05 **Item :** SARR **Function :** Command B **Backshell :** N/A
EMC-Category : 2 **Conn.-Type :** DBMA-25P

Pin	Signal Designation		Interface-Code Circ	Signal	Pos.	Grouping Ch. ID	Shd	Cable	Twist	Comment	New
01	+10V I/F Bus B SAR	SUP	E22	DPB-	- D	DB06					
02	+10V I/F Bus B SAR	RTN	E22	DPB-	-7	D B 0 6					
03	PTC A-& Tx A Off SAR	SIG	B08	CCP-	- D	CP66					
04	Execute LvlCtl B SAR	SIG	B08	CCP-	- D	CP67					
05	Tx B On-Tx A Off SAR	SIG	B08	CCP-	- D	CP68					
06	121/243RxBOn-AOffSAR	S I G	B08	CCP-	- D	CP69					
07	406 Rx B Off SAR	SIG	B08	CCP-	- D	CP70					
0S	Conv B On-A Off SAR	SIG	B08	CCP-	- D	CP71					
09	406 B On - A Off SAR	SIG	B08	CCP-	- D	CP72					
10	2.4kb/s DataIn B SAR	SIG	B13	DAS-	- D	DAS2					
11	NC	-									
12	Tx B En/Dis SAR	SIG	B08	CCL-	- D	a 2 8					
13	AGC B Dis SAR	SIG	B08	CCL-	- D	a 2 9					
14	Level Ctl B Bit0 SAR	SIG	B08	CCL-	- D	a 3 0					
15	Level Ctl B Bit1 SAR	SIG	B08	CCL-	- D	a 3 1					
16	Level Ctl B Bit2 SAR	SIG	B08	CCL-	- D	a 3 2					
17	Level Ctl B Bit3 SAR	SIG	B08	CCL-	- D	a 3 3					
18	Level Ctl B Bit4 SAR	SIG	B08	CCL-	- D	a 3 4					
19	Bus B Dest Bit5 SAR	SIG	B08	CCL-	- D	a 3 5					
20	Bus B Des Bit6 SAR	SIG	B08	CCL-	- D	CL36					
21	NC	-									
22	SC	-									
23	SC	-									
24	SC	-									
25	Chassis Gnd B SAR	-									

Table ***3.5.2.3/3 : Pin*** *Allocation List of Connector JO5*

Connector : 2SARXXXJ06 Item : SARR Function : **Telemetry B** **Backshell :** N/A
EMC-Category : 2 **Conn.-Type :** DBMA-25S

Pin	Signal Designation		Interface-Code Circ	Signal	Pa.	Grouping Ch. ID	Shd	Cable	Twist	Comment	New
01	PTC B Temp SAR	SIG	O44	TLA-	- D	TAA2					
02	28VDC PTC Input	.-								Tied int.-Do not use	
03	NC	.-									
04	16VDC Conv B SAR	SIG	O46	TLA-	- D	TAA3					
05	Tx B Output Pwr SAR	SIG	O47	TLA-	- D	TAA4					
06	TxB RFPwrAmpTempSAR	SIG	O44	TLA-	- D	TAA5					
07	TxB RF Drv Curr SAR	SIG	O48	TLA-	- D	TAA6					
08	121AGC Volts-RxB SAR	SIG	O49	TLA-	- D	TAA7					
09	243AGC Volts-RxB SAR	SIG	O49	TLA-	- D	TAA8					
10	406AGC Volts-RxB SAR	SIG	O49	TLA-	- D	TAA9					
11	121/243RxBLocOszTemp	SIG	O44	TLA-	- D	TAB0					
12	406RxBLocOszTemp SAR	SIG	O44	TLA-	- D	TAB1					
13	TxB BaseplateTempSAR	.-								ri int.-Do not use	
14	SC	.-									
15	SC	.-									
I6	SC	.-									
17	SC	.-									
18	SC	.-									
19	NC	.-									
20	SC	.-									
21	(Do Not Use)	.-									
22	(Do Sa Use)	.-									
23	(Do Sa Use)	.-									
24	(Do Not Use)	.-									
25	Chassis Gnd B SAR	.-									

Table 3.5.2.3/4 : ***Pin*** *Allocation List of Connector JO6*

Connector : 2SARXXXP02 Item : SARR Function : Command A Conn.-Type : DBMA-25S-NMB
EMC-Category : 2 Location : TBD Backshell : TBD

Pin	Signal Designation		Circ	Interface-Code Signal	Pa.	Ch. ID	Grouping Wiring	Shd	Cable	Tnbt	Comment	End-It.	Loc.	Connector	Pin	New
01	+10V in: Bus A SAR	.SUP	122	DPB-	D	DB05	TP-24					NIU	240	NIU240 Pxx		
02	+10V I/f' Bus A SAR	.RIN	122	DPB-	7	DB05	TP-24					NIU	240	NIU240 Pxx		
03	PTC B-& Tx B Off SAR	.SIG	108	CCP-	D	CP59	SL-24					NIU	240	NIU240 Pax		
04	Execute LvlCtl A SAR	.SIG	108	CCP-	D	CP60	SL-24					NIU	240	NIU240 Pxx		
05	'IX A On-TX B Off SAR	.SIG	108	CCP-	D	CP61	SL-24					NIU	240	NIU240 Pxx		
06	121/243RxAOn-BOffSAR	.SIG	108	CCP-	D	CP62	SL-24					NIU	240	NIU240 Pxx.		
07	406 Rx A Off SAR	.SIG	108	CCP-	D	CP63	SL-24					NIU	240	NIU240 Pxx		
08	Conv A On - BOff SAR	.SIG	108	CCP-	D	CP64	SI.-24					NIU	240	NIU240 Pxx		
09	406 A On - B Off SAR	.SIG	108	CCP-	D	CP65	SL-24					NIU	240	NIU240 Pxx		
10	2.4kb/s DataInA SAR	.SIG	113	DAS-	D	DAS1	SL-24					SARP-3	xxx	SAPXXX P210	38	
11	NC	.-														
12	Tx A En/Dis SAR	.SIG	108	CCL-	D	CL19	SL-24					NIU	240	NIU240 Pxx		
13	AGC A Dis SAR	.SIG	108	CCL-	D	Cl.20	SL-24					NIU	240	NIU240 Pxx		
14	Level Ctl A Bit0 SAR	.SIG	108	Ccl.-	D	CL21	SL-24					NIU	240	NIU240 Pxx		
15	Level Ctl A Bitt SAR	.SIG	108	CCL-	D	Cl.22	SI.-24					NIU	240	NIU240 Pxx		
16	Level Ctl A flit2 SAR	.SIG	108	CCL-	D	CL23	SL-24					NIU	240	NIU240 Pxx		
17	Level Ctl A Bit3 SAR	.SIG	108	CCL-	D	Cl.24	SL-24					NIU	240	NIU240 Pxx		
18	Level Ctl A Bit4 SAR	.SIG	108	CCL-	D	CL25	SL-24					NIU	240	NIU240 Pxx		
19	Bus A Dest Bid SAR	.SIG	108	CCL-	D	Cl.26	SL-24					NIU	240	NIU240 Pxx		
20	Bus A Dest Bit6 SAR	.SIG	108	CCL-	D	Cl.27	SI.-24					NIU	240	NIU240 Pxx		
21	NC	.-														
22	NC	.-														
23	NC	.-														
24	NC	.-														
2s	Chassis Gnd A SAR	.-														

Table 3.5.2.3/5 : Pin Allocation List of Connector PO2

Connector : 2SARXXXP03 Item : SARR Function : Telemetry A Conn.-Type : DBMA-25P-NMB
EMC-Category : 2 Location : TBD Backshell : TBD

Pin	Signal Designation		Interface-Code Circ	Signal	Pos.	Grouping Ch. ID	Wiring	Shd	Cable Twist	Comment	End-It.	Loc.	Connector	Pin	New
01	PTC A Temp SAR	.SIG	044	TLA-	- D	TA90	SL-24				NIU	240	NIUUO	Pxx	
02	28V DC PTC Input SAR	.SIG	045	TLA-	- D	TA91	SL-24				NIU	240	NIU240	Pxx	
03	NC	.-													
04	16V DC(Conv A) SAR	.SIG	046	TLA-	- D	TA92	SL-24				NIU	240	NIU240	Pxx	
05	Tx A Output Pwr SAR	.SIG	047	TLA-	- D	TA93	SL-24				NIU	240	NIU240	Pxx	
06	Tx A PwrAmplTemp SAR	.SIG	044	TLA-	- D	TA94	SL-24				NIU	240	NIU240	Pxx	
07	Tx A RF Drv Curr SAR	.SIG	048	TLA-	- D	TA95	SL-24				NIU	240	NIU240	Pxx	
08	121AGC Volts-RxA SAR	.SIG	D49	TLA-	- D	rA96	SL-24				NIU	240	NIU240	Pxx	
09	243AGC Volts-RxA SAR	.SIG	049	TLA-	- D	TA97	SL-24				NIU	240	NIU240	Pxx	
10	406AGC Volts-RxA SAR	.SIG	049	TLA-	- D	TA98	SL-24				NIU	240	NIU240	Pxx	
11	121/243RxALocOszTemp	.SIG	044	TLA-	- D	TA99	SL-24				NIU	240	NIU240	Pxx	
12	406RxALocOszTemp SAR	.SIG	044	TLA-	- D .	TAA0	SL-24				NIU	240	NIUUO	Pxx	
13	Tx BaseplateTemp SAR	.SIG	044	TLA-	- D	TAA1	SL-24				NIU	240	NIUUO	Pxx	
14	NC	.-													
15	NC	.-													
16	NC	.-													
17	NC	.-													
18	NC	.-													
19	NC	.-													
20	NC	.-													
21	121MHzRFReduSwtTLM	.SIG	050	TLD-	- D	TD64	SL-24				NIU	240	NIU240	Pxx	
22	243MHzRFReduSwtTLM	.SIG	050	TLD-	- D	rim	SL-24				NIU	240	NIU240	Pxx	
23	406MHzRFReduSwtTLM	.SIG	050	TLD-	- D	TD66	SL-24				NIU	240	NIU240	Pxx	
24	TxOutRFReduSwtTLMSAR	.SIG	350	TLD-	. D	TD67	SL-24				NIU	240	NIUUO	Pax	
25	Chassis Gnd A SAR	.-													

Table 3.5.2.3/6 : Pin Allocation List of Connector PO3 (For Information Only)

Connector : 2SARXXXI05 Item : SARR Function : Command B Conn.-Type : DBMA-25S-NMB
EMC-Category : 2 Location : TBD Backshell : TBD

Pin	Signal Designation		Interface Code Circ	Signal	Pos.	Ch. ID	Grouping Wiring	Shd	Cable	Twist	Comment	End-It.	Loc.	Connector	Pin	New
01	+10V I/F Bus D SAR	.SUP	222	DPB-	- D	DB06	TP-24					NIU	240	NIU240 Pxx		
02	t IOV I/F Bus B SAR	.RTN	222	DPB-	- 7	DB06	TP-24					NIU	240	NIU240 Pxx		
03	PTC A-& Tx A Off SAR	.SIG	308	CCP-	- D	CP66	SL-24					NIU	240	NIU240 Pxx		
04	Execute Lvl Ctl B SAR	.SIG	308	CCP-	- D	CP67	SL-24					NIU	240	NIU240 Pxx		
05	Tx B On-TX A OR SAR	.SIG	D08	CCP-	- D	CP68	SL-24					NIU	240	NIU240 Pxx		
06	121/243 Rx B On-A Off SAR	.SIG	308	CCP-	- D	CP69	SL-24					NIU	240	NIU240 Pax		
07	406 Rx B Off SAR	.SIG	308	CCP-	- D	CP70	SL-24					NIU	240	NIU240 Pxx		
08	Conv D On-A Off SAR	.SIG	308	CCP-	- D	CP71	SL-24					NIU	240	NIU240 Pxx		
09	406 B On - A Off SAR	.SIG	308	CCP-	- D	CP72	SL-24					NIU	240	NIU240 Pxx ,		
10	2.4kb/s Data In B SAR	.SIG	313	DAS-	- D	DAS2	SL.24					SARP-3	xxx	SAPXXX P210	39	
11	NC	.-														
12	Tx D En/Dis SAR	.SIG	308	CCL-	- D	CL28	SL-24					NIU	240	NIU240 Pxx		
13	AGC B Dis SAR	.SIG	308	CCL-	- D	CL29	SL-24					NIU	240	NIU240 Pxr		
14	Level Ctl D Bit0 SAR	.SIG	308	CCL-	- D	CL30	SL-24					NIU	240	NIU240 Pxx		
15	Level Ctl B Bit1 SAR	.SIG	308	CCL-	- D	CL31	SL-24					NIU	240	NIU240 Pxx		
16	Level Ctl B Bit2 SAR	.SIG	308	CCL-	- D	CL32	SL-24					NIU	240	NIU240 Pxx		
17	Level Ctl B Bit3 SAR	.SIG	308	CCL-	- D	CL33	SL-24					NIU	240	NIU240 Pxx		
18	Level Ctl B Bit4 SAR	.SIG	308	CCL-	- D	CL34	SL-24					NIU	240	NIU240 Pxx		
19	Bus B Dest Bit5 SAR	.SIG	308	CCL-	- D	CL35	SL-24					NIU	240	NIU240 Pxx		
20	Bus D Dest Bit6 SAR	.SIG	308	CCL-	- D	CL36	SL-24					NIU	240	NIU240 Pxx		
21	NC	.-														
22	NC	.-														
23	NC	.-														
24	NC	.-														
25	Chassis Gnd D SAR	.-														

*Table **3.5.2.3/7 : Pin** Allocation List of Connector PO5*

Connector : 2SARXXXIN6 Item : SARR Function : Telemetry B Conn.-Type : DBMA-25S-NMB
EMC-Category : 2 Location : TBD Backshell : TBD

Pin	Signal Designation		Interface Code Circ	Signal	Pos.	Oh. ID	Wiring	Shd	Cable Twist	Comment	End-It.	Loc.	Connector Pin	lew
01	PTC B Temp SAR	.SIG	044	TLA-	- D	TAA2	SL-24				NIU	240	NIU240 Pax	
02	28VDC PTC Input	.-								Tied int.-Do not use				
03	NC	.-												
04	16VDC Conv B SAR	.SIG	046	TLA-	- D	TAA3	SL-24				NIU	240	NIU240 Pxx	
05	Tx B OutputPwr SAR	.SIG	047	TLA-	- D	TAA4	SL-24				NIU	240	NIU240 Pxx	
06	TxB RFPwrAmplTempSAR	.SIG	044	TLA-	- D	TAA5	SL-24				NIU	240	NIU240 Pax.	
07	TxB RF Drv Curr SAR	.SIG	048	TLA-	- D	TAA6	SL-24				NIU	240	NIU240 Pxx	
08	121AGC Volts-RxB SAR	.SIG	049	TLA-	- D	TAA7	SL-24				NIU	240	NIU240 Pxx	
09	243AGC Volts-RxB SAR	.SIG	749	TLA-	- D	TAA8	SL-24				NIU	240	NIU240 Pax	
10	406AGC Volts-RxB SAR	.SIG	049	TLA-	- D	TAA9	SL-24				NIU	240	NIU240 Pax'	
11	121/243RxBLocOszTemp	.SIG	044	TLA-	- D	TAB0	SL-24				NIU	240	NIU240 Pxx	
12	406RxBLocOszTemp SAR	.SIG	044	TLA-	- D	TAB1	SL-24				NIU	240	NIU240 Pax	
13	TxB BaseplateTempSAR	.-								Tied int.-Do not use				
14	NC	.-												
15	NC	.-												
16	NC	.-												
17	NC	.-												
18	NC	.-												
19	NC	.-												
20	NC	.-												
21	(Do Not Use)	.-												
22	(Da Not Use)	..												
23	(Do Not Us)	.-												
24	(Do Not Use)	.-												
2s	Chassis Gnd B SAR	.-												

*Table 3.5.2.3/8 : Pin **Allocation List** of Connector PO6* ***(For Information** Only)*

3.5.3. Signal Interfaces With SARP-3, RFF and SLA

353.1. Signal Interface Requirements (Interfaces With SARP-3, RFF and SLA)

There is no signal interface requirement between METOP and SARR for the following signals :

- RF signals to and from SARR : interface data sheets and interface circuits are N/A.
- Inter-unit signal : SARR is provided with the inter-pallet ham&

Table 3.5.3.1-1 lists all signals of the SARR signal electrical interface with SARP-3, RFF and SLA and gives references for the 2.4 kbps Data to the Interface Data Sheets in § 3.5.3.1.1 and the interface circuits in § 3.5.3.1.2.

Signal	Data Sheet Code	Interface Circuit	Remarks
2.4 kbps Data A SARP / SARR	DAS	Fig 3.5.3.1.2-1	at connector J02, *)
2.4 kbps Data B SARP / SARR			at connector J05, *)
Inter-Pallet Signal	N/A	N/A	The harness is delivered with the instrument
1 2 1 5 MHz Rx Filter SARR	N/A	N/A	50 Ω coaxial cable.& SMA connectors
243 MHz Rx Filter SARR	N/A	N/A	
406 MHz Rx Filter SARR	N/A	N/A	
L-Band Tx Switch SARR	N/A	N/A	

*) connector JO2 / JO5 see § 35.2.2

Table 3.5.3.1-l : *Signal to Data Sheets & Interface Circuit Assignments*

3.5.3.1.1. Signal Interface Data Sheets (Interfaces With SARP-3)

On the following page, the electrical characteristics of the 2.4 lcbps Data SARP / SARR electrical interfaces are defined In § 3.5.3.1 'Signal Electrical Interface Requirements' and § 3.5.2.3 'Signal Pin Allocation Lists' is referenced to this Data Sheet.

Signal Nomenclature	2.4 kbps Data SARP / SARR	
Code	DAS	
EMC Class	Signal	
Source Circuit Specification:		
Parameter	**Requirement**	**Remarks**
'1' - Level	-0.2 ... +0.2 V	line to 10 V I/F ground
'0' - Level (V_{OH})	+9.3 ... +10.7 V	line to 10 V I/F ground
Repetition Rate	2.4 kbps	
Rise Time 10% to 90%	< 2 µs	cable length < 5 m
Fall Time 90% to 10%	< 2 µs	cable length < 5 m
Output Impedance	< 1.5 kΩ	R (CMOS output) + 200 Ω
Source Current	> 1 mA	@ V_{OH} = 9.5 V
Fault Voltage Emissions	0 V ... V_{DD}	R_S > 100 Ω
Fault Voltage Protection	-0.5 V ... V_{DD} + 0.5 V	V_{DD} defined in Data Sheet CCL
Load Circuit Specification		
Parameter	**Requirement**	**Remarks**
'1' - Level	-0.5 ... +2 V	line to 10 V I/F ground
'0' - Level	+8.0 ... +10.8 V	line to 10 V I/F ground
Sink Current	< 1 mA	
Input Impedance	> 90 kΩ	
Fault Voltage Emissions	0 V ... V_{DD}	R_S > 2 kΩ
Fault Voltage Protection	-0.5 V ... V_{DD} + 0.5 V	V_{DD} defined in Data Sheet CCL
Harness Design		
Parameter	**Requirement**	**Remarks**
Wiring Type	AWG 24, single line	return via 10 V I/F ground
Maximal Cable Length	4 m	return via NIU !! (10 V I/F ground)

3.5.3.1.2. Signal Interface Circuits (Interfaces With SARP-3)

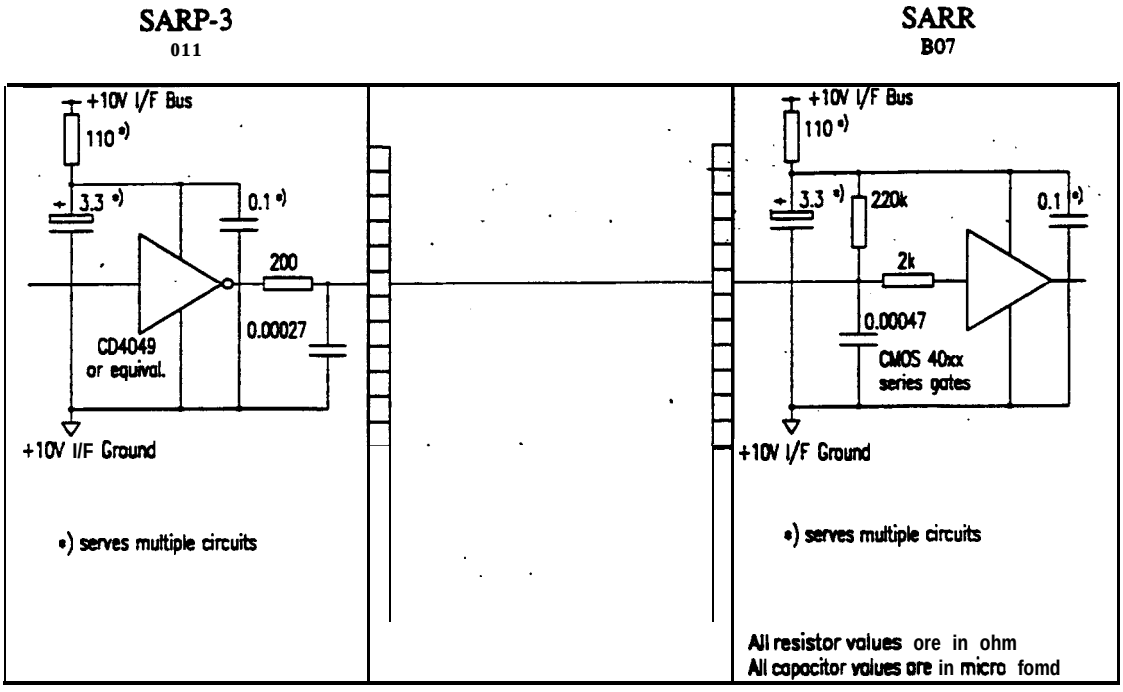

Note : Max. Cattle length of harness see Data Sheet DAS

Fig. 3.5.3.1.2-I : 2.4 *kbps Data Interface Circuit*

3532. Signal Connectors (Interfaces With SARP-3, RFF, SLA)

Table 3.5.3.2-l identifies the signal electrical (Interfaces with SARP-3, RFF, SLA) connector types at the SARR boxes and Table 3.5.3.2-2 identifies the signal electrical (Interfaces with SARP-3. RFF, SLA) connector types at the SARR harness.

The 2.4 kbps Data A SARP interface is on connector J02, and the 2.4 kbps Data B SARP interface is on connector J05.

Connector	Connector-Type	Function
JO8	SMA female	1215 MHz BP. Filter
JO9	SMA female	243 MHz B.P. Filter
J10	SMA female	406.05 MHz B.P. Filter
J11	SMA female	L-Band Coax Switch

Table 3.5.3.2-l : *Signal Connector Types at SARR Boxes for Interfaces With RFF and SLA*

Connector	Connector-Type	Function
P08	SMA male	1215 MHz B.P. Filter
P09	SMA male	243 MHz B.P. Filter
P10	SMA male	406.05 MHz B.P. Filter
P11	SMA male	L-Band Coax Switch

Table *3.5.2.2-2 : Signal Connector Types at SARR Harness for Interfaces With RFF and SLA*

3533. Signal Pin Allocation List (Interfaces With SARP-3, RFF and SLA)

In these lists, the cross reference between connector pin, signal designation, Interface Data Sheet, target connector and target connector pin is defined and recorded as data base. Per connector one list is prepared

Interface circuits of a unit are combined with the relevant interface circuit of the target connector.

Interface Data Sheets can be found in § 3.5.3.1.1.

The individual pin allocation lists are specified by 9 characters of a alpha numerical connector number. For the SARR the first 3 characters are SAR. The 7th character is J for a box connector or P for a harness connector. The last two characters define the connector number.

Since these lists also specify wiring and shielding, they will form the basis for harness manufacturing.

The signal connector pin allocations at instrument level are described in Tables 3.5.3.3/1 to /5. The signal connector harness are described in Tables 3.5.3.3/6 to /10.

Connector : FSARXXXJ08 **Item :** SARR Function: 121.5 MHzBFI **Backshell :** N/A

EMC-Category : F Cam-Type : WA-female

Pin	Signal Designation		Circ	Interface-Code Signal	P a	Ch. ID	Grouping Shd	Cable	Twist	Comment	New
C	121.5MHz B.P. Filter	SIG	050	RFL-	-	RFL1		I			
S	CABLE SHIELD	SHD	SHD		-		1	-			

*Table **3.5.3.3/1 : Pin Allocation** List of Connector JO8*

Connector : FSARXXXJ09 **Item :** SARR Function : 243 MHzBFI **Backshell :** N/A

EMC-Category : F Conn.-Type : SMA-female

Pin	Signal Designation		Circ	Interface-Code Signal	Pos.	Ch. ID	Grouping s b d	Cable	Twist	Comment	New
C	243MHz B.P. Filter	SIG	050	RFL-	-	RFL2	1				
s	CABLESHIELD	SHD	SHD				1				

***Table 3.5.3.3/2 :** Fin Allocation List of Connector JO9*

Connector : FSARXXXJ10 **Item :** SARR Function : 406.05MHzBFI **Backshell :** N/A

EMC-Category : F Conn.-Type : SMA-female

Pin	Signal Designation		Circ	Interface-Code Signal	Pos.	Ch. ID	Grouping Shd	Cable	Twist	Comment	New
C	406.05MHz B.P.Filter	SIG	050	RFL-		RFL3	1				
S	CABLE SHIELD	SHD	SHD				1				

*Table **3.5.3.3/3** : Pin **Allocation** List of Connector JIO*

Connector : FSARXXXJ11 **Item:** SARR Function : L-Band CSO **Backshell :** N/A

EMC-Category : F Conn.-Type : SMA-female

Pin	Signal Designation		Circ	Interface-Code Signal	Pos.	Ch. ID	Grouping Shd	Cable	Twist	Comment	New
C	L-Band Coax Switch	SIG	050	RFL-	- RFL4	1					
S	CABLE SHIELD	SHD	SHD			1					

*Table **3.5.3.3/4 :** Pin Allocation List of Connector **J11***

Connector : FSARXXXP08 flrm : SARR Function : 121.S MHzBFI Conn.-Type : SMA-male
EMC-Category : F Location : TBD Backshell : N/A

Pin	Signal Designation		Interface-Code Circ	Signal	Pa.	Grouping Ch. ID'	Wlrfng	Shd	Cable Twist	Commml	End-It.	Loc.	Connector	Pin	New
C	121.5MHz B.P. Filter	.SIG	050	RFL-	-	RFL1	COAX-GCX	I			SARR-RFF	XxX	RFFXXX	Pxx	
S	CABLE SHIELD	.SHD	SHD		-			I			SARR-RFF	XxX	RFFXXX	Pxx	

Table 3.5.3.3/5 : Pin Allocation. List of Connector P08 (For Information Only)

Connector : FSARXXXP09 Item : SARR Function : 243MHzBFI Conn.-Type : SMA-male
EMC-Category : F Location : TBD Backshell : N/A

Pin	Signal Designation		Interface-Code Circ	Signal	Pos.	Grouping Ch. ID	Wfrfng	Shd	Cable Twist	Comment	End-It.	Loc.	Connector	Pin	NW
C	243MHz D.P. Filter	.SIG	050	RFL-	-	R19.2	COAX-GCX	I			SARR-RFF	XXX	RFFXXX	Pxx	
S	CADLH SHIELD	.SHD	SHD					I			SARR-RFF	Xxx	RFFXXX	Pxx	

Table 3.5.3.3/6 : Pin Allocation List of Connector PO9 (For Information Only)

Connector : FSARXXXP10 Item : SARR Function : 406.05MHzBFI Conn.-Type : SMA-male
EMC-Category : F Location : TBD Backshell : N/A

Pin	Signal Designation		Interface-Code Circ	Signal	Pos.	Grouping Ch. ID	Wiring	Shd	Cable Twist	Comment	End-11	Loc.	Con&or	Pin	New
C	406.05MHz B.P.Filter	.SIG	050	RFL-	-	R11.3	COAX-GCX	I			SARR-RFF	XXX	RFFXXX	Pxx	
S	CABLE SHIELD	.SHD	SHD					I			SARR-RFF	XXX	RFFXXX	Pxx	

Table 3.5.3.3/7 : Pin Allocation List of Connector P10 (For Information Only)

Connector : FSARXXXP11 Item : SARR Function : L-BandCSO Conn.-Type : SMA-male
EMC-Category : F Location : TBD Backshell : N/A

Pin	Signal Designation		Interface-Code Circ	Signal	Pa.	Grouping Ch. ID	Wiring	Shd	Cable Twist	Comment	End-It.	Loc.	Connector	Ptn	New
C	L-Band Car Switch	.SIG	050	RFL-	-	RFL4	COAX-GCX	1			SARR-RFF	XXX	RFFXXX	Pxx	
S	CADLESIIIp3.D	.SHD	SHD					I			SARR-RFF	XXX	RFFXXX	Pxx	

Table 3.5.3.3/8 : Pin Allocation List of Connector P11 (For Information Only)

3.6. TEST INTERFACES

There is no dedicated connector for tests.

3.7. HARNESS

The harness between METOP units (including RF. equipments) and SARR is under the responsibility of the PLM, based on the connector & pin lay-out definition and electrical performances from § 3.4 and 3.5.

As far as the internal SARR harness between the Receiver Pallet and the Transmitting Pallet is concerned, it is under the responsibility of the Instrument Supplier for all aspects concerning its specification, design, manufacturing and test (the harness max length is defined in § 2.2.1.).

The harness between SARP-3 and SARR is under the responsibility of the PLM, based on the connector & pin lay-out definition from § 3.5.3 and electrical performances as dealt in DAS Interface Data Sheet (see § 3.5.3.1.1. the harness max length is also defined for reference in § 2.2.1.).

3.8.' EMC INTERFACE DESCRIPTION

38.1. Electrical Bonding

361.1. General

The SARR Receiver and Trasmitter Pallets are electrically bonded to the METOP spacecraft structure by means of grounding straps whose locations are defined in the mechanical interface drawing (§ 2.1.4.).

3.8.13. Joint Faces

Not applicable for SARR pallets.

3.8.1.3. Structural Parts

Not applicable for SARR pallets.

3.8.1.4. Unit Housings

3.8.1.4.1. Bondmg of Unit Cases

All unit cases shall be bonded to spacecraft suucture via the equipment box feet. The minimum bonding contact area shall be at least 1 cm^2. The resistance between unit case and clean aluminium suucture shall be ≤ 10 mΩ.

3.8.1.4.2. Bonding of Thermally Isolated Boxes

N/A.

3.8.1.4.3. Bonding of Unit mounted on CFRP or Nonconductive Parts

N/A.

3.8.1.4.4. DC Resistance between Adjacent Unit Case Parts

N/A.

3.8.1.4.5. DC Resistance between Bonding Stud and Mounting Feet

N/A.

3.8.1.5. Thermal Blankets

N/A.

3.8.1.6. Cable and Harness Shields

3.8.1.6.1. Grounding of Cable Shields

Cable shields shall be grounded at receiver pallet end.

SARR inter-pallet harness is not shielded

3.8.1.6.2. Bonding of Overall Harness Shields

N/A.

3.8.1.7. connectors

3.8.1.7.1. Design of Connectors

N/A for SARR.

3.8.1.7.2. Bonding Resistance of Connector Receptacle

The connector receptacle shall be bonded to the equipment case with a DC resistance of $\leq 10\ m\Omega$.

3.8.1.7.3. Bonding Resistance of Connector Back Shell

N/A for SARR.

38.2. Grounding and Isolation

The grounding system of the instrument shall use separate grounds (see Figure 3.8.2-1) as follows:

- +28V Main Power Ground
- +28V Switched TLM Bus
- +10V Interface Ground
- Signal Ground

Each ground shall be electrically isolated, to the extent possible, from all other grounds within the instrument and from chassis by 100 kΩ or greater DC resistance.

3.8.2.1. +28V Main Power Ground

The +28V main power return is grounded within the PCU to structure .

3.8.2.2. +28V Switched Telemetry Ground

The +28V switched telemetxy return is grounded within the PCU to structure.

3.833. +10V Interface Ground

The + 10V interface return is grounded within the NIU to structure.

3.83.4. Signal Ground

Signal ground is the power return line for the secondary side of the instrument DC/DC converters. The signal ground is grounded within the SARR to structure.

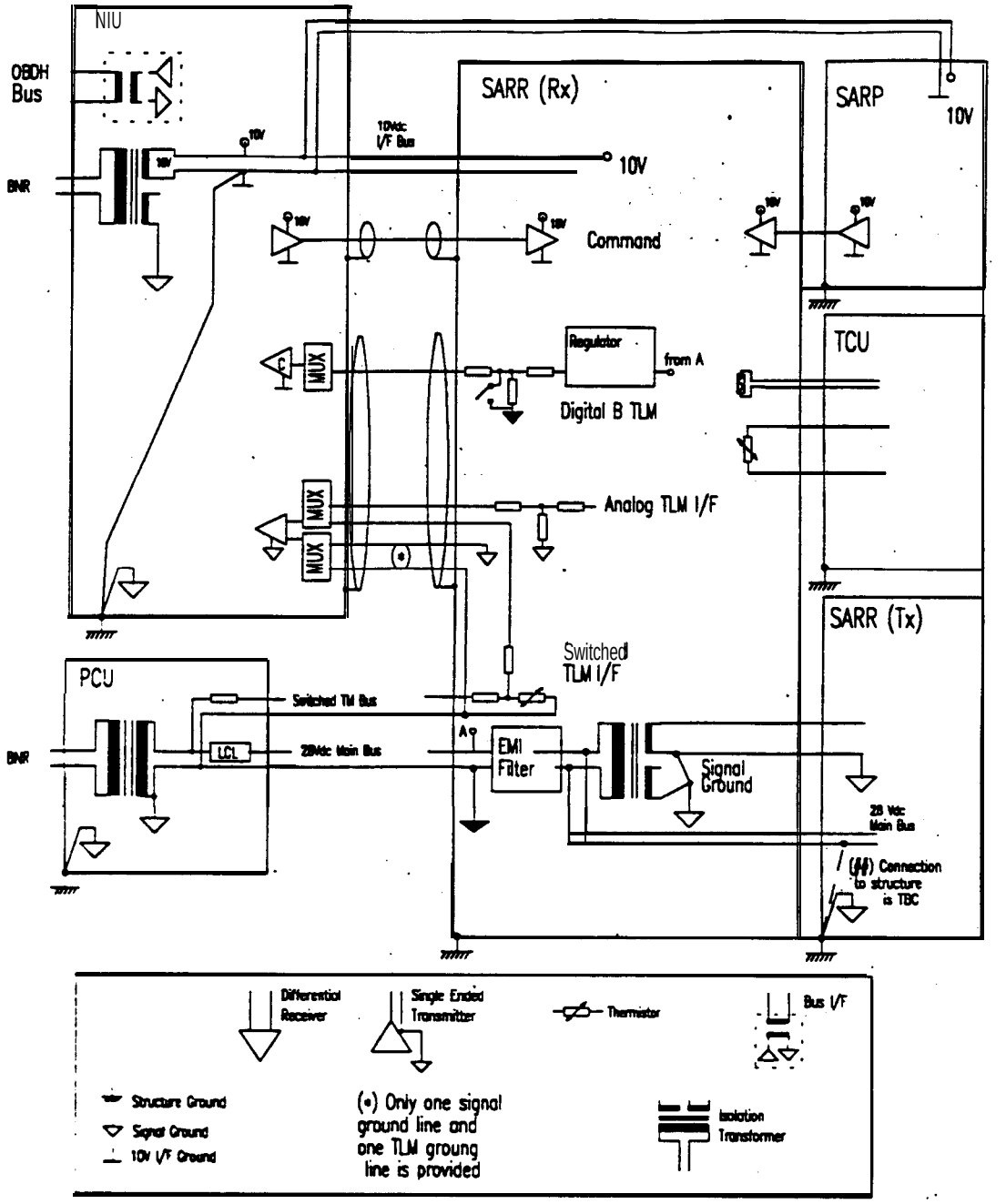

Figure 3.8.2-1: Grounding and Isolation Concept for SARR

3.83. Shielding

383.1 wire Shielding

3.8.3.1.1 Bonding of Shields

N/A.

3.8.3.1.2 Overall Shield

N/A.

3.8.3.1.3 Shields as Current-Carrying Conductors

Shields shall not be used as intentional current-carrying conductors and not as return lines for power and signal with exception of the RF coaxial lines.

3.83.2. Case shielding

3.8.3.2.1. Non-magnetic Metallic Housing

N/A.

3.8.3.2.2. Case Apertures

N/A.

3.8.3.2.3. Venting Holes

Venting hole description :

- diameter : TBD_{SARR}
- location : TBD_{SARR} .

3.8.4. SARR Frequency Characteristics

The SARR RF input and output characteristics are given in § 1.22 and § 3.9.

The internal frequencies are:

Source	Frequency	User
TBD_{SARR}	7.144 MHz	(1 2 1 5 MHz)
TBD_{SARR}	116304 MHz	(121.5 MHz)
TBD_{SARR}	14.288 MHz	(243.0 MHz)
TBD_{SARR}	228.608 MHz	(243.0 MHz)
TBD_{SARR}	23.875 MHz	(405.05 MHz)
TBD_{SARR}	382.000 MHz	(405.05 MHz)
TBD_{SARR}	96.5 MHz	(1544.5 MHz)
TBD_{SARR}	386.000 MHz	(1544.5 MHZ)

3.8.5. Magnetic Moment

Magnetic fields generated by the SARR shall not exceed 0.28 Gauss in all directions at a distance of 0.15 m from the centre of each assembly or at the unit outer surface. whichever is greater.

List of Magnetic Material.

Magnetic materials used in the instrument are listed in Table 3.8.5.-1

Material	Standard	Magnetic Characteristic	Remark
Name of material	*AISI etc.*	*soft /hard*	
Alnico 8B	TBD_{SARR}	TBD_{SARR}	L-Band Transmitters
MO.6 (Fe_2O_3) Iron Oxide. Barium or Strontium Yttrium Iron garnet Ferrite - G1210	TBD_{SARR}	TBD_{SARR}	204/406 Receiver Isolators

Note: Small transformer cores and ferrite beads are not included in the list above.

Table 3.8.5.-1 : Magnetic Materials Used in the Instrument

3.8.6. EMC Performance Requirements

The EMC performances for the SARR are dealt within § 4.3.

3.9. RF' INTERFACE DESCRIPTION

The SARR requires three RF inputs at 121.50, 243.00 and 406.05 MHz and one RF output at 1544.5 MHz. It consists of :

- dual-conversion 1215 MHz receivers
- dual-conversion 243.0 MHz receivers
- dual-conversion 406.05 MHz receivers
- 7.2 W phase modulated L-band transmitters

3.9.1. Receive Function characteristics

3.9.1.1. Receiver Electrical Characteristics

All three receivers contain AGC and provide outputs to drive the transmitters. The 121.5 and 243 MHz receivers share the same oscillator and are coherent in a ratio of 1:2.

The electrical characteristics of the SARR receivers are illustrated in Figure 3.9.1.1/1.

Figure 3.9.1.1/1 : SARR Receiver Electrical Characteristics (1/2)

#	Parameter	unit	Values for 12150 MHz Receiver	Values for 243.00 MHz Receiver	Values for 406.05 MHz Receiver
a	1 dB Bandwidth	kHz	± 12.5	± 23	± 40
b	Receiver Noise Temp.	deg. K	600	350	350
c	Polarization	N/A	RHCP	RHCP	RHCP
d	Input Signal from Beacon :				
	Power Flux Density	dBW/m²	-152 (Max -138)	TBD_{SARR}	-142 (Max -120)
	Polarization	N/A	Linear	TBD_{SARR}	Linear
	(For information only)				
e	Background Noise (environmental, i.e. at the system antenna port input):				
	Unwanted Intermittent Voice Emitters (Max Transmitter Power)	W	25 TBC_{SARR}	TBD_{SARR}	TBD_{SARR}
	Broadband : Maximum	deg. K	10000	5000	2000
	Nominal	deg. K	6000	3000	1000
	Minimum	deg. K	2500		

Figure 3.9.1.1/1 : SARR Receiver Electrical Characteristics (2/2)

#	Parameter	Unit	Values for 121.50 MHz Receiver	Values for 243.00 MHz Receiver	Values for 406.05 MHz Receiver
f	Nominal Input Level (Note 1)	dBW	- 144 TBC_{SARR}	- 146 TBC_{SARR}	- 137.3 TBC_{SARR}
g	Maximum Input Level	dBW	- 50 (Note 2)		
h	Dynamic Range	dBW	-178.9 to -137.9	-181.8 to -149.9	-164.3 to -137.2
i	Linearity	N/A	Note 3		
j	Group Relay Slope	µs/kHz	50	25	13
k	Image Rejection	dB	120		
I	AGC Time Constant (For information only)	ms	10 - 85		
m	AGC Dynamic Range (For information only)	dB	> 50 (Note 4)		
n	Transient Recovery Time (For information only)	m s	< 2		
o	Frequency Stability				
	Long Term (2 year)	N/A	1x10-6		
	Medium Term (15 min)	N / A	1×10^{-10}		
	Short Term (1 sec.)	N/A	1×10^{-10}		

Note 1: The nominal input levels are given at the level of the SARR instrument input port. They are defined as follows :

- 121 .SO MHz : nominal noise of 6000 K plus ten simultaneous signals, each of - 157.3 dBW
- 243.00 MHz : nominal noise of 3000 K plus ten simultaneous signals. each of - 163.8 dBW
- 406.05 MHz : nominal noise of 1000 K plus ten simultaneous signals, each of -147.6 dBW.

Note 2 : The maximum input levels are given at the level of the SARR instrument input port.

Note 3 : With receivers in AGC mode and with nominal level settings, two out-of-bad signals (for bandwidth from Figure 3.9.2.1) of -92 dBW at the receiver input, or two in-band signals of - 110 dBW, do not produce inter-modulation products within the same base-band exceeding an output level of - 170 dBW with respect to the receiver input.

Note4: The peak modulation index limit of each repeater band is set such that any single in-band signal of up to - 110 dBW will not cause the composite modulation index limit to be reached before the AGC reduces the receiver output level back to nominal.

The SARR Receiver baseband filtering characteristics for all three channels are given in Figure 3.9.1.1/2.

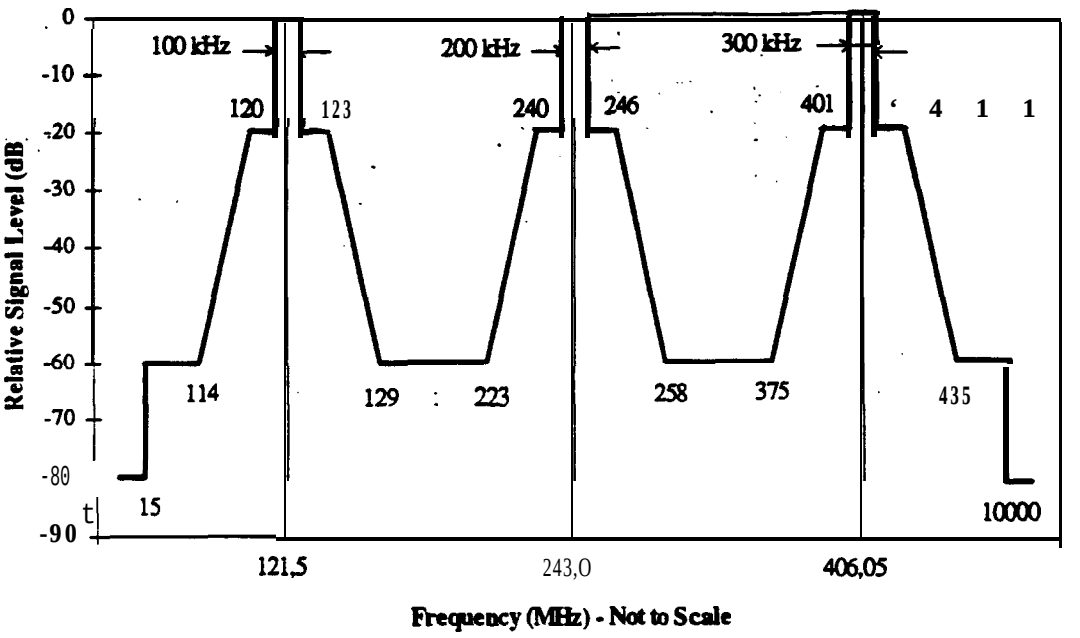

Figure 3.9.1.1/2 : SARR Receiver ***Bandpass Characteristics***

3.9.13. Receiver RF Characteristics

Each receiver can be characterized by a template which defines its capability to withstand CW or broad baud uoise-like interfering signals with a known degradation performance.

The receiver susceptibility data far the SARR Receiver channels are defined in Table 3.9.1.2-l.

Criterion for the maximum allowed receiver interference : TBD_{SARR}.

Frequency Bands (MHz)			Max Signal Level at SARR RF Receiver Terminals (dBm)
406.05 (MHz) Centre Frequency	243.0 (MHz) Centre Frequency	121.5(MHz) Centre Frequency	
0 -15	o-15	0 - 15	0
15 -375	15 - 228	15-114	-20
375 - 385	228 - 236	114 - 118	-60
385 - 401	236 - 240	118 - 120	-100
401 -405.9	240 - 242.925	120 - 121.45	-125
405.9 - 406.2	242.925 - 243.075	121.45 - 121.55	-145
406.2 - 411	243.075 - 246	121.55 - 123	-125
411 - 425	246 - 250	123 - 125	-100
425 - 435	250 - 258	125 - 129	-60
435 - 1000	258 - 1000	129 - 1000	-20
1000 - 10000	1000 - 10000	1000 - 10000	0
10000 - 200000	10000 - 200000	10000 - 200000	0

Note : METOP assumes that the SARR receivers are compatible with any emission from ground.

Table 3.9.13-l : Receiver Susceptibility Data for the SARR Receiver Channels

3.9.2. Transmitting Function Characteristics

3.911. Transmitter Electrical Characteristics

The 1544.5 MHz downlink contains the 121.5 / 243 / 406 MHz repeated beacon data (local mode) and the 24 kbps PDS that contains the 406 MHz beacon local mode data (from SARP-3).

The electrical characteristics of these output parameters are (see also Figure 3.9.2.1/1) :

Repeater Channel Baseband				
Parameter	Unit	1215 MHz Repeater Channel Baseband	243.0 MHz Repeater Channel Baseband	406.05 MHz . Repeater Channel Baseband
Centre Frequency	kHz	47.0	94.0	170.0
Frequency Translation	N/A	Uninverted	uuinvated	Uninverted
Nominal Modulation Index	Rad (RMS)	0.44 ± 106	0.44 ± 10 %	0.22 ± 10 %
1 dB Bandwidth	kHz	± 12.5	± 23	± 40

PDS Channel		
Parameter	unit	PDS Channel
Bit Rate	bps	2400 ± 0.5 %
Nominal Modulation Index	Rad. (RMS)	0.22 ± 10 %
Data Encoding	N/A	Biphase-L
Doppler Measurement Accuracy (For information only)	Hz (RMS)	IO.35
Frequency Measurement Period (For information only)	ms	120
Rob. of Good Signal Processing (For information only)	N/A	> 0.99

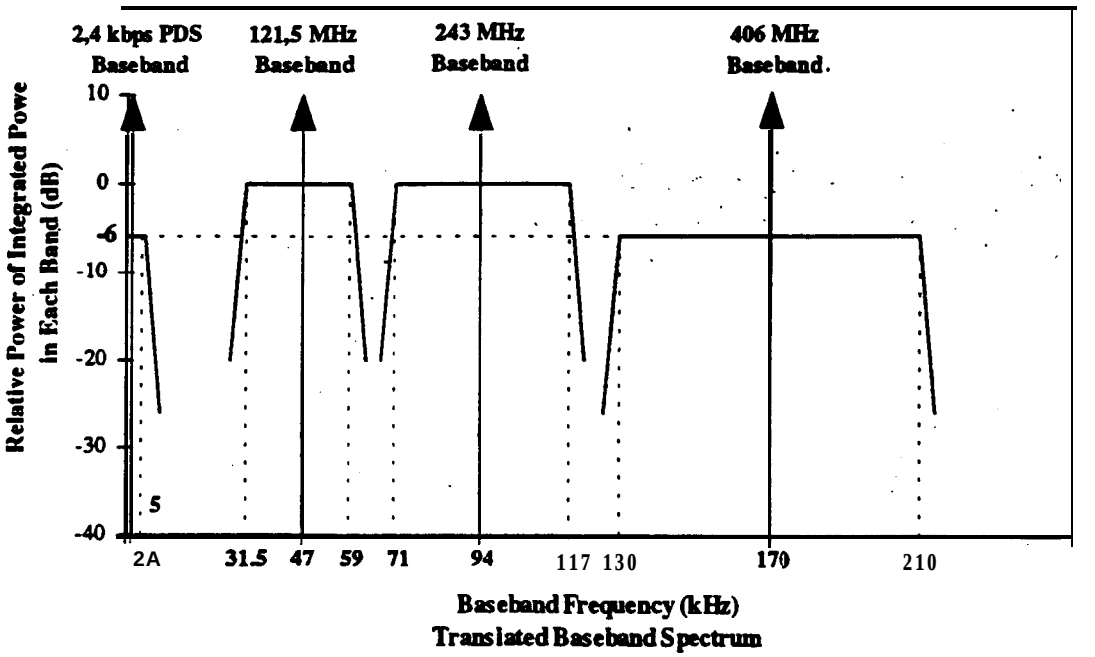

(1 dB bandwidths)

*Figure **3.9.2.1/1 : SARR Baseband** Frequency **Spectrum***

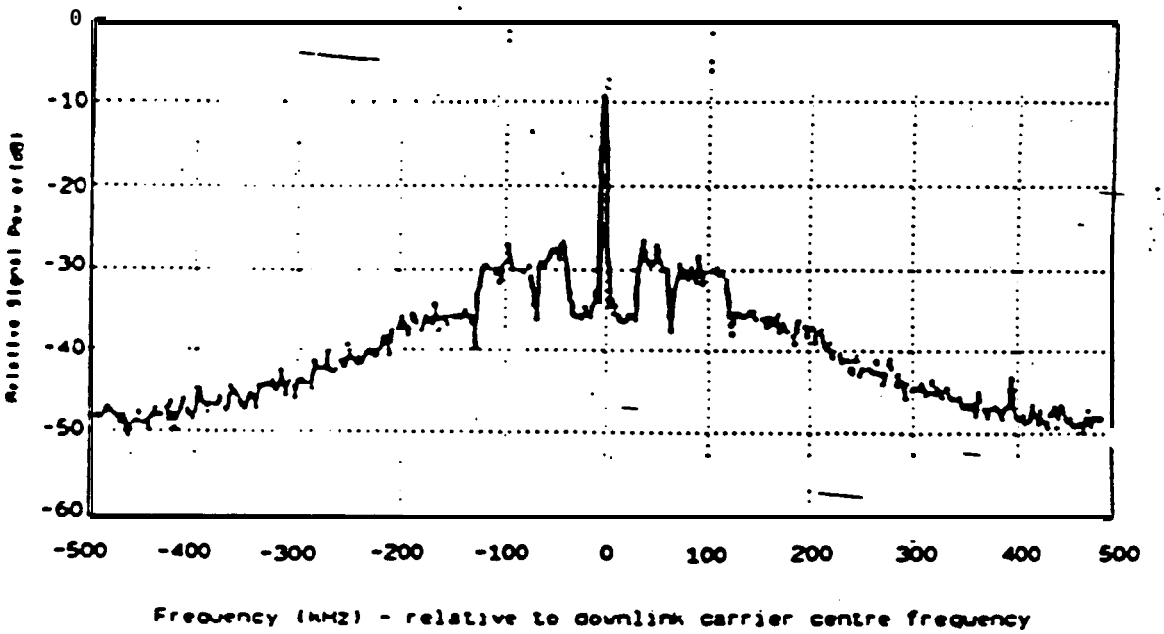

*Figure **3.9.2.1/2 : Typical** SARR **1544.5 MHz** Observed **Downlink** Signal*

The electrical characteristics of the SARR transmitter are the following (see also Figure 3.9.2.1/2) :

Parameter	Unit	Value
Centre Frequency	MHz	1544.5
Nominal Power Output of Transmitter	W	7.2.
Phase Jitter (in 50 Hz Bandwidth)	deg. (RMS)	≤ 10
Occupied Bandwidth (Including Doppler)	kHz	≤ 800 (Total)
Modulation Type	N/A	Linear Phase Modulation
Nominal Composite Modulation Index	Rad. (RMS)	0.70 ± 10 %
Downlink Baseband Spectrum	N/A	See Figures 3.9.2.1/1 and 3.9.2.1/2
Incidental Amplitude Modulation (AM) (For information only)	%	≤ 5
Spurious Output Level	dBW	See § 3.9.2.23.
Frequency Stability		
Long Term (2 year)	N/A	f3.2
Medium Term (15 min.)	N/A	1×10^{-10}
Short Term (1 sec.)	N/A	1×10^{-10}
Maximum Modulation Index Level : 121.5	Rad. (peak)	1.30 (hard limiter)
243.0	Rad. (peak)	1.30 (hard limiter)
406.05	Rad. (peak)	1.30 (hard liniiter)
PDS	Rad. (peak)	0.39 (max. setting)
composite	Rad. (peak)	2.10 (hard limiter)
Amplitude Ripple	dB	≤ 2.5

3.9.2.2. Transmitter RF Characteristics

3.9.2.2.1. Carrier Spectrum

The transmitter spectrum is defined by the following template :

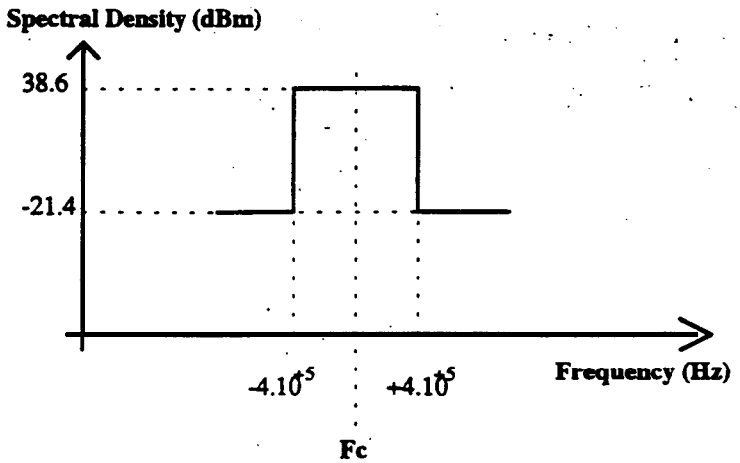

3.9.2.2.2. Harmonics Contents

The harmonics of the carrier are filtered according to :

Harmonic Frequency	Level (dBc)
2 Fc	- 60 TBC_{SARR}
3 Fc	- 70
4 Fc	- 80 TBC_{SARR}
5 Fc, 6 Fc... n Fc	- 110 TBC_{SARR}

Harmonics may have a broad specaum composed of continuous spectra and discrete lines. The spectrum of the first three harmonics shall be described like the carrier.

3.9.2.2.3. Spurious Emissions

Any signal which is not the modulated carrier or its harmonics, is considered a spurious in origin.

The level of the discrete and noise-like spurious shall be as described in Figures 3.9.2.2.3-l and 3.9.2.2.3-2. These levels apply outside of the specified Fc ± 10 kHz band.

In addition, the levels from Table 3.9.2.2.3-3 are guaranteed at SARR transmitter output, for protection for specific frequency bands.

3.93. METOP RF Accommodation

The requirements for the METOP accommodation axe specifiedin RD6.

Frequency (MHz)	Max Permissible Conducted Level out of SARR	
0.01 - loo00	- 30 dBm / 1 MHz	(2)
121.5 ± 1	- 105 dBm / 40 kHz	(1)
148-154	- 85 dBm / 40 kHz	(1)
243 ± 2	- 105 dBm / 40 kHz	(1)
394-406	- 105 dBm / 40 kHz	(1)
406 ± 5	- 105 dBm / 40 kHz	(1)
1660 - 1670	- 82 dBm / Hz	(2)
1694.3 - 1694.7	- 82 dBm / Hz	(2)
1720 - 1721	- 82 dBm / Hz	(2)
2020 - 2120	- 40 dBm / 1 MHz	(2)

(1) Discrete spurs, measured in indicated bandwidth

(2) Power level is total'powcr measured in indicated bandwidth

Table *3.9.2.2.3-3 : Max Permissible Conducted Level Out of SARR*

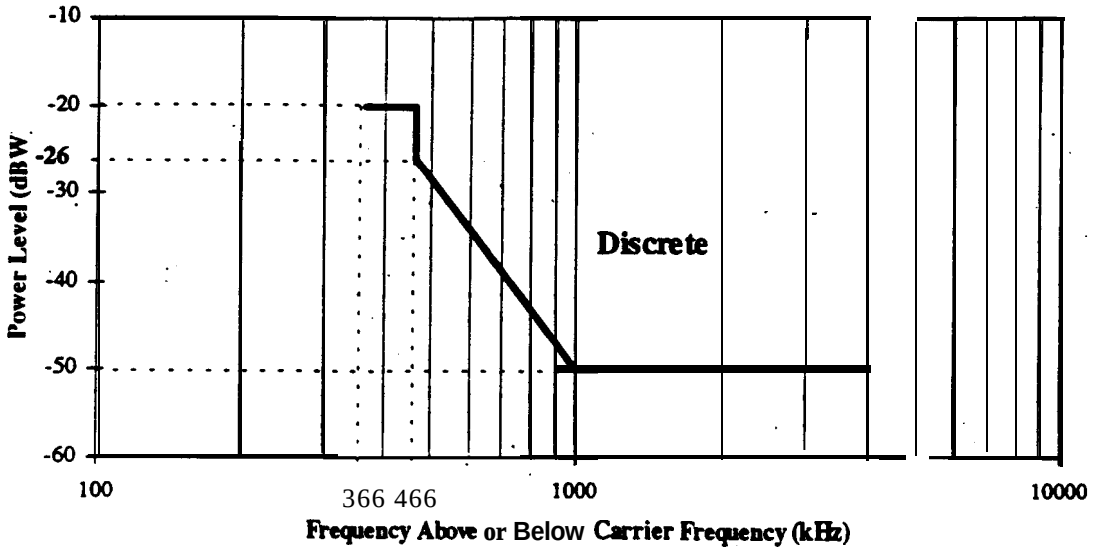

*Figure 3.9.2.2.3-l : SARR **Transmitter** Discrete **Spurious** Emission Limits*

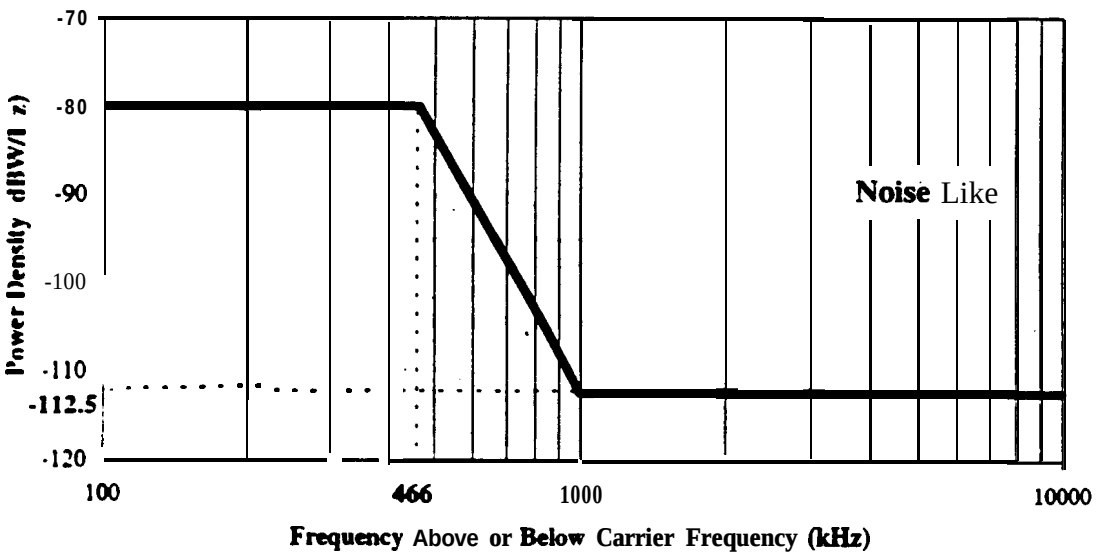

*Figure **3.9.2.2.3-2** : SARR **Transmitter Noise-Like** Spurious **Emission** Limits*

4. INSTRUMENT VERIFICATION DESCRIPTION

BLANK

4.1. MECHANICAL / STRUCTURAL VERIFICATION

4.1.1. Structural Analysis

4.1.1-l. Quasi-Static Loads (Interface)

Requirement for analysis will be determined by. outcome of accommodation analytic results.

The METOP requirements are dealt with in § 2.2.8.

4.1.13. Structural /Dynamic Analyses

Requirement for analysis will be determined by outcome of accommodation analytic results.

4.1.13. Instrument Shock Environment

The SARR will be subject to the following shock environment :

METOP Shock Levels (g peak, *see* notes)	
100 Hz	37 g
900 Hz	350 g (Q > 10) 310 g (Q = 10)
2000 Hz	350 g (Q > 10) 310g (Q = 10)
4000 Hz	300 g

Notes

The acceleration shall be derived from the curve obtained by linear connection on a logarithmic chart of the provided points

The shock spectrum in each direction of the three orthogonal axes shall be equivalent to a half sine pulse of 0.5 ms duration and 200 g (zero to peak) amplitude.

4.12. Structural Tests.

It is recognised by the Single Space Segment Team of METOP, that instrument's capabilities are different from the METOP loads specified in § 4.1.2. The instrument's design and qualification status is summarized in Appendix of this section of the ICD. METOP's enviromnent herein are initial predictions and will be updated following future analysis and the satellite structural model test campaign.

4.1.2.1. Structural Mathematical Model Validation

Not apphcable for SARR.

4.1.2.2. Vibration Test : High Level Sine Sweep

The SARR will be subject to the sine vibration satellite level testing. Preliminary predictions of the worst case imposed environment are as follows :

METOP High Level Sine Sweep Levels (TBC_{MET} *)	
QUAL	All three axes 6 to 20 Hz ±9.3 mm 20 to 60 Hz ±15 g 60 to 100 Hz ±6 g Sweep rate : 2 Oct/min. No notching is allowed.
ACC	All three axes 6 to 20 Hz ±7.5 mm 20 to 60 Hz ±12 g 60 to 100 Hz ±4.8 g sweep rate : 4 Oct/min. No notching is allowed.

* : To be confirmed / updated after structural model testing.

4.133. Vibration Test : Sine Burst

METOP has no sine burst test requirement

4.12.4. Vibration Test : Random Levels

The SARR pallets will be subject to an acoustic environment during satellite tests which will result in an equivalent random input at the instrument interface. Preliminary prediction of this input is as follows

	METOP Random Vibration Levels (TBC_{MET} *)					
	SARR Receiver			SARR Transmitter		
	Axis Perpendicular to Mounting Plane			Axis Perpendicular to Mounting Plane		
	Frequency Range (Hz)	Power Spectral Density g^2/Hz	Slope (dB/Oct.)	Frequency Range (Hz)	Power Spectral Density g^2/Hz	Slope (dB/Oct.)
Q	20 to loo		+3	20 to 100		+3
U	100 to 400	0.154		100 to 400	0.290	
A	400 to 2000		-3 out-of-plane 4 in-plane	400 to 2000		-3 out-of-plane -4 in-plane
L	Overall level : 12.4 g rms normal 11.4 g rms lateral Duration 2 min per axis			Overall level : 17.0 g rms normal 15.7 g rms lateral Duration 2 min per axis		
	Axis Perpendicular to Mounting Plane			Axis Perpendicular to Mounting Plane		
	Frequency Range (Hz)	Power Spectral Density g^2/Hz	Slope (dB/Oct.)	Frequency Range (Hz)	Power Spectral Density g^2/Hz	Slope (dB/Oct.)
A	20 to loo		+3	20 to 100		+3
C	100 to 400	0.099		100 to 400	0.186	
C	400 to 2000		-3 out-of-plane -4 in-plane	400 to 2000		-3 out-of-plane -4 in-plane
	Overall level : 9.9 g rms normal 9.2 g rms lateral Duration 1 min per axis			Overall level : 13.6 g rms normal 12.5 g rms lateral Duration 1 min per axis		

. : To be confirmed / updated after structural model testing.

4.1.2.5. Acoustic Test

Not applicable to SARR pallets.

4.2. THERMAL VERIFICATION : THERMAL TESTS

4.2.1. Thermal Balance Test

A thermal Balance Test (TB) shall validate the instrument thermal control and accommodation on METOP, and the SARR thermal mathematical model used for the temperature predictions for all flight cases (correlation of this instrument model within the METOP thermal environment with an accuracy better than ± 5 deg. C on instrument transient and steady-state cases). This will be performed during the METOP system TB test. The evaluation of test results at instrument level is Instrument Supplier responsibility.

4.22. Thermal Vacuum Tests

The thermal cycle vacuum tests at instrument level evaluate and demonstrate the functional performance of each unit under the extreme and nominal modes of operation while in vacuum and at temperatures more extreme than predicted for the orbit conditions.

The instrument qualification thermal vacuum test includes TBD_{SARR} cycles and the extreme temperature levels are TBD_{SARR} deg. C (min.) / TBD_{SARR} deg. C (Max).

The instrument acceptance thermal vacuum test includes TBD_{SARR} cycles and the extreme temperature levels are TBD_{SARR} deg. C (min.) / TBD_{SARR} deg. C (Max).

4.3. EMC VERIFICATION

43.1. EMC Performance Requirements

43.1.1. Conducted Emission

The conducted emission on each individual power line shall not exceed the limits as given below.

4.3,1.1.1. SARR Design Requirements

Conducted electromagnetic emissions from the power lines in the frequency range from 30 Hz to 50 kHz shall not exist in excess of 2 % of the maximum current budget when measured using the MIL-STD-462C test methods CE01/CE03.

4.3.1.1.2. METOP Requirements

For instrument characterisation only. METOP assumes compatibility of the instrument with these requirements.

Limits for +28V Main Power Bus

a) As given in § 3.4.3. (Load Current Ripple)

b) Conducted emission in the frequency range 30 Hz to 50 MHz, which may appear on +28 V Main Bus positive and return leads in differential and common mode, shall be within the maximum specified levels of Fig. 4.3.1.1-l.

Note : The maximum frequency of 50 MHz can be reduced to the highest frequency (+9 harmonics) used by the instrument

The Common Mode CE requirement is a specific METOP requirement.

Limits for +28 V Switched TLM Bus

As given in § 3.4.3. (Load Current Ripple)

Limits for +10V Interface Bus

As given in § 3.4.3. (Load Current Ripple)

Limits for Heater Power Bus

a) As given in § 3.4.3. (Load Current Ripple)

b) Conducted emission in the frequency range 30 Hz to 50 MHz, which may appear on Heater Power Bus positive and return leads, shall be within the maximum specified levels of the Figure 4.3.1.1-2.

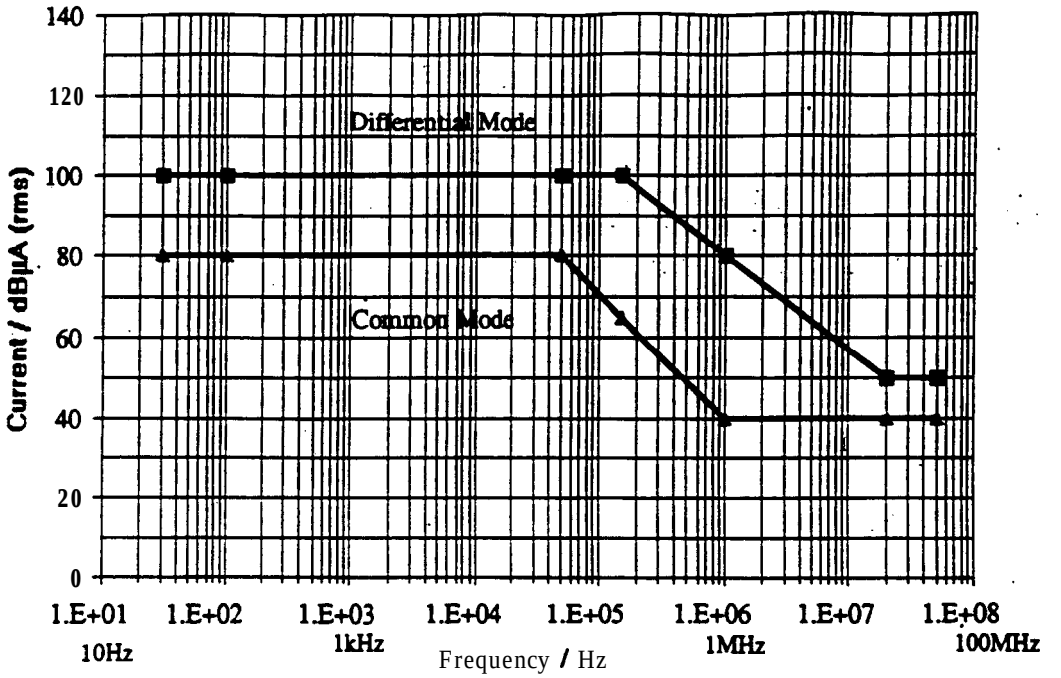

*Fig. **4.3.1.1-1** : Conducted Emission **Limit,** NB, **DM,** CM, 28V Reg. Power Leads, **PLM Instrument***

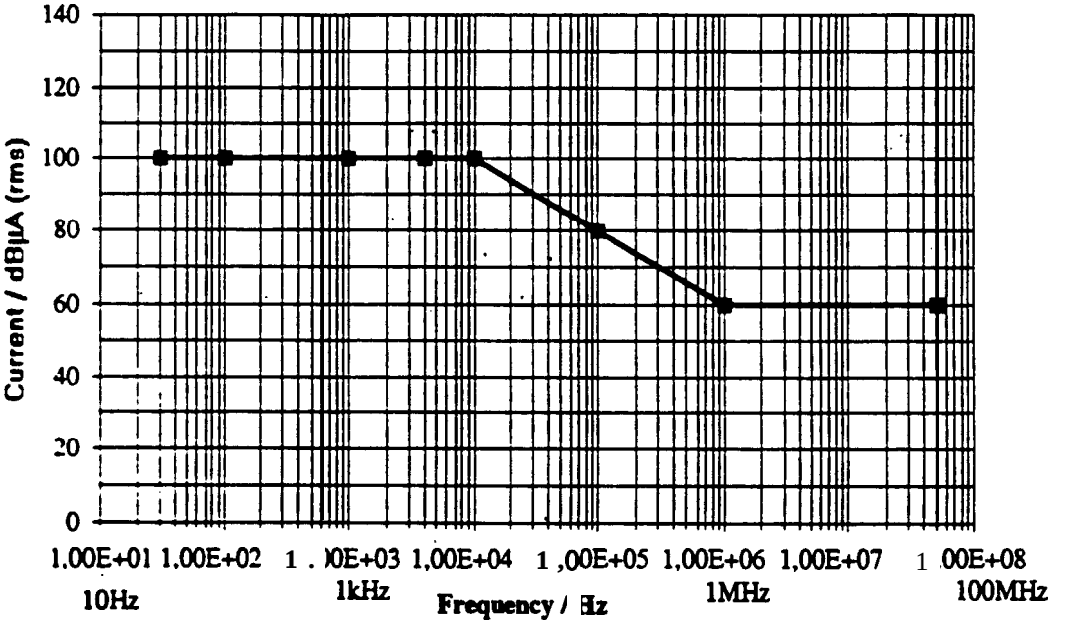

*Fig. **4.3.1.1-2 : Conducted** Emission Limit, NB, DM, **Thermal** Control Heaters*

4.3.1.2. Conducted Susceptibility

Frequency Domain

The test set-up shall be in accordance to § 4.3.3.

The instrument shall operate without degraded performance in the presence of sinusoidal noise coupled into the power lines between the frequency range 30 Hz and 150 kHz :

SARR Requirement

+28 V Main Bus / +28 V Switched TLM Bus

injected voltage	between 30 Hz and 50 kHz	150 mVpp (CS01)
	between 50 and 150 kHz	300 mVpp (CS02)

+10 V Interface Bus

injected voltage	100 mVpp

METOP Requirement

For instrument characterisation only. METOP assumes compatibility of the instrument with these requirements.

+28 V Main Bus / +28 V Switched TLM Bus	injected voltage	300 mVpp
+10 V Interface Bus	injected voltage	100 mVpp

(Frequency range as above).

Time Domain

The instrument shall operate without degraded performance when subjected to a series of transient pulses. 10 µsec in width and PRF of 10 Hz applied to the power lines for 10 min. :

+28 V Main Bus	spike level	+10 V / -12 V
+10 V Interface Bus	spike level	+1 V / -1 V

The test method CS06 shall be in accordance to § 4.3.3.

Special METOP Requirement

For instrument characterisation only. METOP assumes compatibility of the instrument with these requirements.

In addition to above requirements, the SARR will experience a common mode sinusoidal noise 300 mV_{pp} in the frequency range 100 kHz and 50 MHz. The noise will be injected between :

the +28 V main bus return line and unit housing, according to Figure 4.3.1.2-1

and the + 10 V interface bus return line and unit housing, according to Figure 4.3.1.2-2

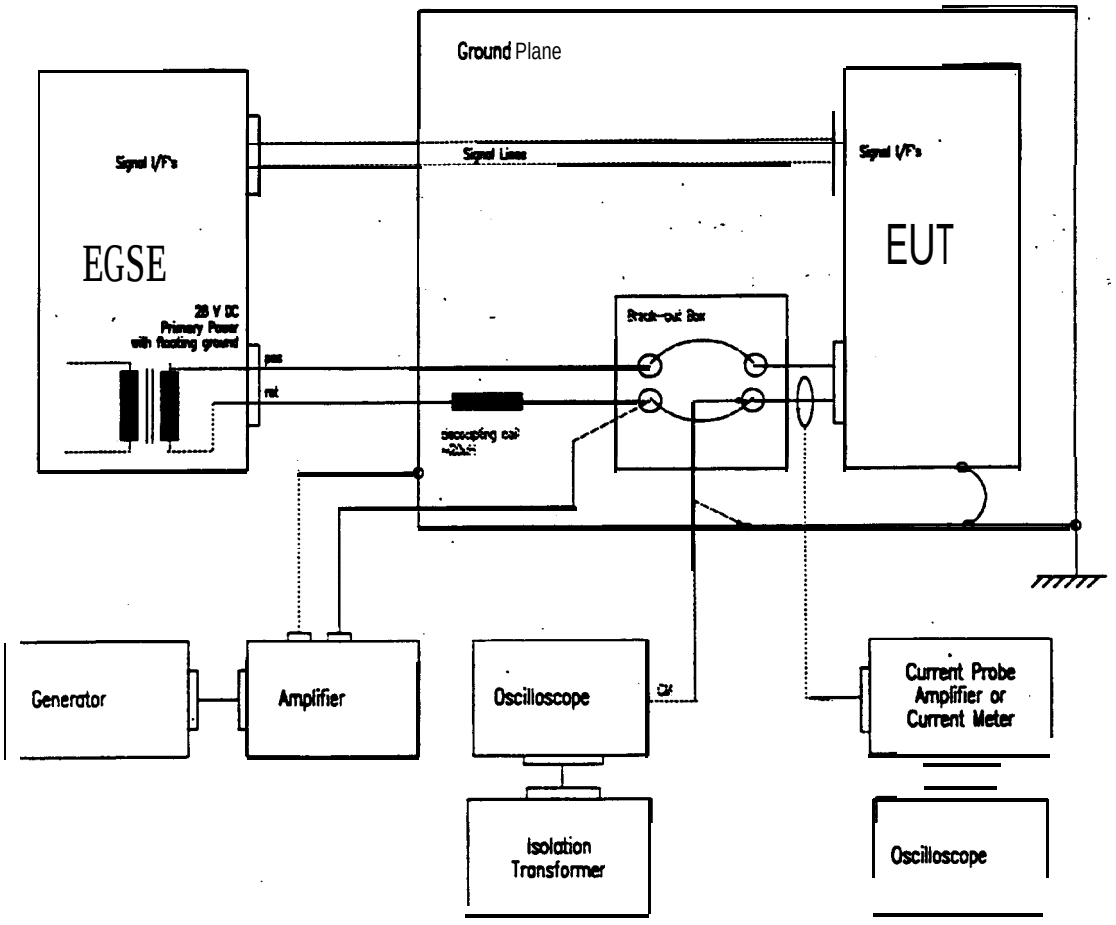

*Fig. 4.3.1.2-Z : Common Mode Noise Test on the **+28** V Main Bus*

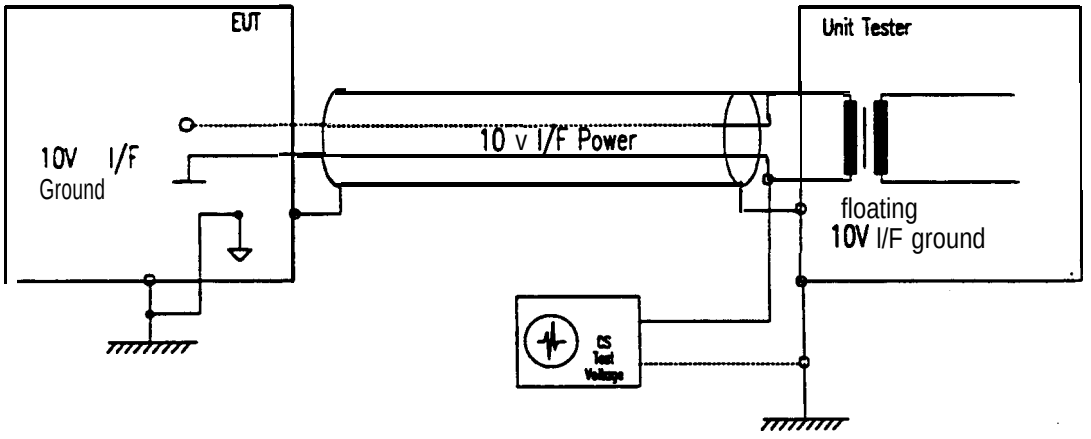

*Fig. 4.3.1.2-t : Common **Mode** Noise Test on the + **10** V **Interface** Bus*

43.13. Radiated Emission

4.3.1.3.1. SARR Design Requirements (Mil-Std-RE02 Requirements)

E-field emissions in the frequency range of 14 kHz to 10 GHz shall not be generated and radiated in excess of the values shown in Figure 4.3.1.3.1-1 at a distance of at least 1 m (RE02).

The limit shall be met for both horizontally and vertically polarized waves.

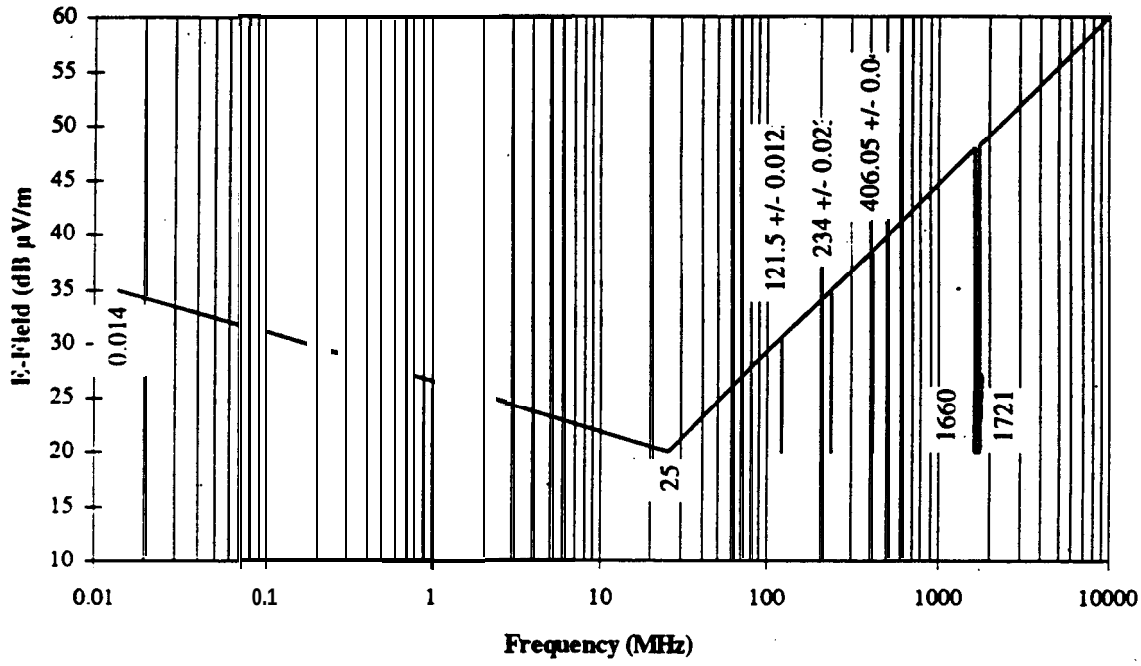

Figure 4.3.1.3.1-1 : RE-E- Field Limit (SARR)

4.3.1.3.3. METOP Requirements

For instrument characterisation only. METOP assumes compatibility of the instrument with this requirement.

The radiated emissions in the frequency range 14 kHz to 2 GHz shall not exceed the limit given in Table 4.3.1.3-l.

Frequency Range	E-Field Limits (dBµV/m) TBC_{MET}	Remark
10 kHz . . . 2 GHz	+ 50	Covered by Mil-Std 461/462 RE02 *
2 GHz ... 40 GHz	+ 70	

. : The requirements of Mil-Std 461/462 RE02 are more stringent than the METOP RE limits

Table 4.3.1.3-1 : RE-E- Field Limit

Radiated emissions in the METOP payload and system receiver channel guard bands shall not exceed the limit5 defined here below :

Frequency Range (MHz)	Radiation Limit (dBm)	E-Field Level (dBµV/m) TBC_{MET}	Remark
396 - 401.5	N/A	+ 45	SARP-3 / ADCS
401.5 - 401.8	N/A	+ 23	
401.8 - 405.9	N/A	+ 45	
405.9 - 406.2	N/A	+ 23	
406.2 - 411	N/A	+ 45	
1217 - 1257	N/A	+ 21	GRAS
1565 - 1614	N/A	+ 23	
2051.9 - 2055.0	N/A	+ 45	SBS
5254.7 - 5255.3	N/A	+ 24	ASCAT
400 - 500	N/A	+ 20	Applies during launch only
5450 - 5825	N/A	+ 61	

Table 4.3. X.3-2 : *Radiated Emission Notches for* ***SARR***

43.1.4. Radiated Susceptibility

The test method is defined in § 4.3.3.

4.3.1.4.1. SARR Design Requirements

The instrument shall operate without degraded performance while subjected to a radiated electric field of :

a) 10 Vrms/m for frequencies between 14 kHz and 35 MHz

b) 5 Vrms/m for frequencies between 35 MHz and 2 GHz.
The susceptibility shall be met for both horizontally and vertically polarized fields over this frequency range.

c) 32 Vrms/m for frequency at 137 MHz

d) 32 Vrms/m for frequency at 1544.5 MHz

e) 32 Vrms/m for frequency at 1700 MHz

4.3.1.4.2. METOP Requirements

For instrument characterisation only. METOP assumes compatibility of the instrument with this requirement

The instrument will experience a radiated electric field of 1 Vrms/m for frequencies between 14 kHz and 1 GHz, and 2 Vrms/m for frequency between 1 GHz and 18 GHz. The test shall be done with at least 7 discrete frequencies / decade. The radiated E-Field shall be amplitude modulated by a sine wave at 1 kHz with a modulation depth of 50 %.

In addition the instrument will be exposed to the following levels : TBD_{MET}.

4.3.2. EMC Analysis

The EMC of the SARR shall be characterised by test and test discrepancies will be described by the Instrument Supplier. METOP will further assess the impacts on METOP performance.

Magnetic Moments

The magnetic moments shall be determined by analysis or test.

433. EMC Tests

EMC tests shall be performed in accordance with MIL-STD-462C.

Compliance with EMC requirements shall be demonstrated on all models delivered to METOP.

The Radiated Emission tests are applicable on all models delivered to METOP.

The Conducted Emission tests are applicable only on the first instrument model delivered to METOP.

4.4. ELECTRICAL FUNCTIONAL VERIFICATION

In general, the test which are described here below are performed to ascertain the instrument functional performances and culminate with the instrument calibration.
As regards the tests performed after delivery, they are described in § 5 and mainly deal with instrument health checks performed both at ambient and in thermal vacuum environment.

4.4.1. Electrical Interface Tests

In general, throughout the instrument build-out, every interface is thoroughly checked to ensure the compatibility, the adequacy of the electrical interfaces, in propagation from the sensor output / input up to the instrument electronics outputs to the spacecraft on-board equipment, for the basic circuitry and signals : power, measurement data, housekeeping data, commands, clocks, sampling signals...

From a system point of view, the essential step is the measurement of the spacecraft interface signals and characteristics. The operational mode of the spacecraft system shall be simulated to ascertain interface adequacy : special attention is to be paid for the command and acquisition timing and circuit loading should be representative of the on-board characteristics.

4.42. Functional Test

It is the sole responsibility of the Instrument Supplier to define and verify the proper functions of the instrument prior to delivery to METOP. This type of tests are tailored to the specific instrument function verification and they serve as instrument health checks that are performed routinely throughout the instrument developmeut programme.

A subset of these tests will constitute later the core of the system testing when the instrument is integrated on-board the PLM.

4.43. Performance Test

It is also the sole responsibility of the Instrument Supplier to define and verify the ultimate mission performances of the instrument prior to delivery to METOP. This type of tests are tailored to the specific instrument performances and they are achieved ultimately with the insmunent calibration which requires a rather sophisticated and controlled test set-up.

A subset of these tests may later constitute the system performance test with a reduced on-ground set-up. A go / no-go approach is preferred at system level (PLM and Satellite), due to the complexity of the test set-up and the AIT schedule limitations.

Calibration

It is the sole responsibility of the Instrument Supplier to calibrate the instrument prior to delivery to METOP. Re-calibration, if deemed necessary, will also be under the responsibility of the Instrument Supplier. The calibration data shall be made available on-request for the preparation of the system integrated instrument performance test.

APPENDIX : INSTRUMENT ACHIEVED QUALIFICATION STATUS

Vibration Test : High Level Sine Sweep

The SARR pallets are individually subjected to sinusoidal tests. For protoqualification, the following sinusoidal vibration testing is done:

QUAL	Normal axis 5 to 20 Hz ±12.7 mm . 20 to 60 Hz a10 g 60 to 2000 Hz ±3 g sweep rate : 4 Oct/min.
QUAL	. In-plane axis 5 to 15 Hz ±12.7 mm 15 to 60 Hz ±6 g 60 to 2000 Hz ±2.3 g Sweep rate : 4 Oct/min.

Vibration Test : Sine Burst

No test is performed at pallet level. but an analysis at 12.3 g.

Vibration Test : Random Levels

Both pallets **have** been subject to the following random **environment**:

Protoflight Random Vibration Levels					
Horizontal axes 1 & 2 (in the mounting plane)			**Axis Perpendicular to Mounting Plane (Analysis only)**		
Frequency Range (Hz)	Power Spectral Density g^2/Hz	Slope (dB/Oct.)	Frequency Range (Hz)	Power Spectral Density g^2/Hz	Slope (dB/Oct.)
20 to 70	0.05		20 to 70	0.05	
70 to 110		+5	70 to 140		+7
110 to 710	0.11		140 to 500	0.25	
710 to 900		-7	500 to 1000		-7
900 to 2000	0.05		1000 to 2000	0.5	
Overall level : 11.9 g rms Duration 2 min per axis			Overall level : 14.5 g rms Duration 2 min per axis		

Acceptance Random Vibration Levels					
Horizontal axes 1 & 2 (in the mounting plane)			Axis Perpendicular to Mounting Plane, (Analysis only)		
Frequency Range (Hz)	Power Spectral Density g^2/Hz	Slope (dB/Oct.)	Frequency Range (Hz)	Power spectral Density g^2/Hz	Slope (dB/Oct.)
20 to 70	0.025		20 to 70	0.025	
70 to 110		+4.6	70 to 140		+6.4
110 to 710	0.05		140 to 500	0.11	
710 to 900		-8.3	500 to 1000		-6.4
900 to 2000	0.025		1000 to 2000	0.025	
Overall level : 8.2 g rms Duration 1 minperaxis			Overall level : 9.8 g rms Duration 1 min per axis		

5. INSTRUMENT GSE AND AIV INTERFACES .

BLANK

5.1. INSTRUMENT GSE DESCRIPTION

5.1.1. SARR Test Equipment

The Instrument Supplier will provide all test equipment required for bench test of the instrument. It is a computer controlled automatic test equipment called RATS (Repeater Automatic Teat Systein). It shall include an Integration Computer (IC) with printer and modems and a Test Equipment Unit (TEU).

Figure 5.1.1-1 provides an overview of the bench test set-up.

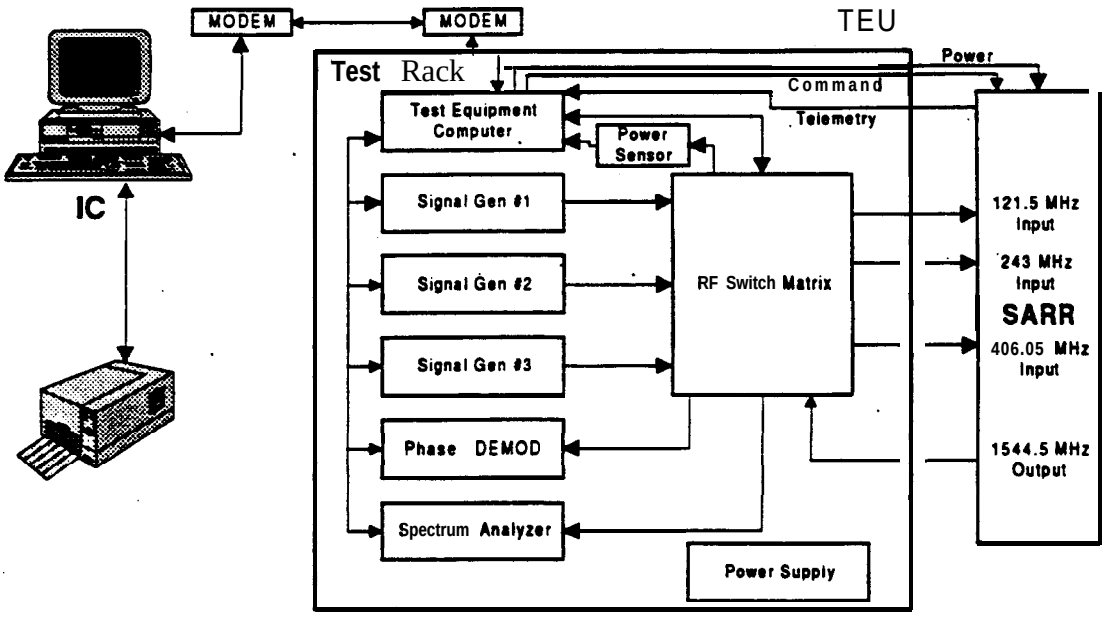

Figure 5.1.1-I : SARR Test Equipment

The RATS provides power and commands to the SARR and generates the stimuli signal in the three signal generators which are fed to the antenna inputs of the instrument via the RF Switch Matrix. From the instrument the telemetry signals and the 1544.5 MHz output channel are received and evaluated.

Bench testing can be done either by using the local control of the RATS Test Equipment Computer or by remote control from the Integration Computer (IC) via a modem link All test results are stored on the TEL' hard disk and can be hand-carried to the stand alone Integration Computer for report printing (no need for modem).

The TEU to instrument interface cables will be provided by the Instrument Supplier.

Standard laboratory equipment such as power meter. oscilloscope or spectrum analyser can be made available by METOP in order to support bench tests. This will include a Digital Multi-Meter (DMM) comparable to HP 34401A for use during calibration of the RATS as defined in the User Manual provided with the RATS (AD7).

It is assumed that the RATS can be used in the following configurations :

- Bench testing with SARR RF downlink through the satellite antenna (air link - RATS L-Band receptor sensitivity to be defined): the RATS L-band receptor sensitivity is TBD_{SARR}.
- The RATS can be operated TBC_{SARR} without using the 2.4 kbps PDS interface (bench level testing configuration ,i.e. RF and satellite emulation,, except for the PDS interfaces; that can be emulated by the SARP-3 itself).

5.13. GSE for Integration with PLM OCOE

The complete RATS, including the integration computer wlll be integrated into the PLM Overall Check-Out Equipment. The spacecraft interface emulator section of the RATS will not be used when the instrument is installed into the PLM. However, this section shall remain in the RATS equipment rack during all stages of the higher level testing.

During higher level testing (i.e. NICE, PLM and Satellite AIV), the SARR test equipment wlll interface with the PLM OCOE via the METOP provided N-DAPB as shown in Figures 5.2.1.1-1 and 5.1.1-1. Communication between the RATS and the N-DAPB is accomplished via the instrument provided integration computer.

5.13. Mechanical Ground Support Equipment

The Instrument Supplier shall provide a shipping plate, which can be used for safely lifting and transporting the SARR after it has been removed from its container. That plate is not used for mounting the SARR onto the spacecraft, since both pallets are removed from the shipping plate and handled manually for installation While in its container, the SARR can be rolled around on provided casters or lifted by forklift as required.

Need for drill template (one set of 2 plates) is TBD_{MET}.

Containers shall be supplied for shipping and storage at the METOP integration and test sites .for each deliverable instrument.

The instrument storage containers will be sealed and back-filled with dry N2 to slightly above one atmosphere.

Protective covers shall be delivered with each instrument for the buffer connectors, the unterminated other connectors and the cooling tubes.

5.1.4. Self-Contained Special Test Equipment

The RATS is a self-contained test system since it includes all necessary equipment needed to perform bench and integration tests. Therefore, this section is not applicable.

5.2. INSTRUMENT GSE INTERFACES

53.1. Interfaces with PLM OCOE

53.1.1. General

The configuration of the SARR instrument t&t equipment within the overall check-out equipment for the METOP payload module is shown in Figure 5.2.1.1-1. The same configuration will be used for TB/TV tests, however with a longer interconnect harness between instrument and stimuli equipment and additional test chamber feed throughs connectors.

5.2.1.2. Stimulus/Feedback Equipment Interface

5.2.1.2.1. Communication port" T .

The communication between the DAPB controller and the RATS shall be accomplished via a serial port as follows :

- 3 wire RS232 lines
- baud rate 28800
- no parity
- 8databits
- 1 stop bit
- 25 pin serial connector

Note : a null modem (part of Instrument Supplier delivery) may be required for proper DCE / CTE communication (TBC_{SARR}).

5.2.1.2.2. Message Format

Messages exchanged between RATS and N-DAPB shall have a length of 20 ASCII characters. The unused portuons of the 20 character format shall be back-filled with spaces.

The messages are left or right (TBD_{SARR}) adjusted.

5.2.1.2.3. Communication Protocol

The communicatuon praocol for command and control of the RATS shall use the transactions defined in AD1 1 Annex B (TBC_{SARR}).

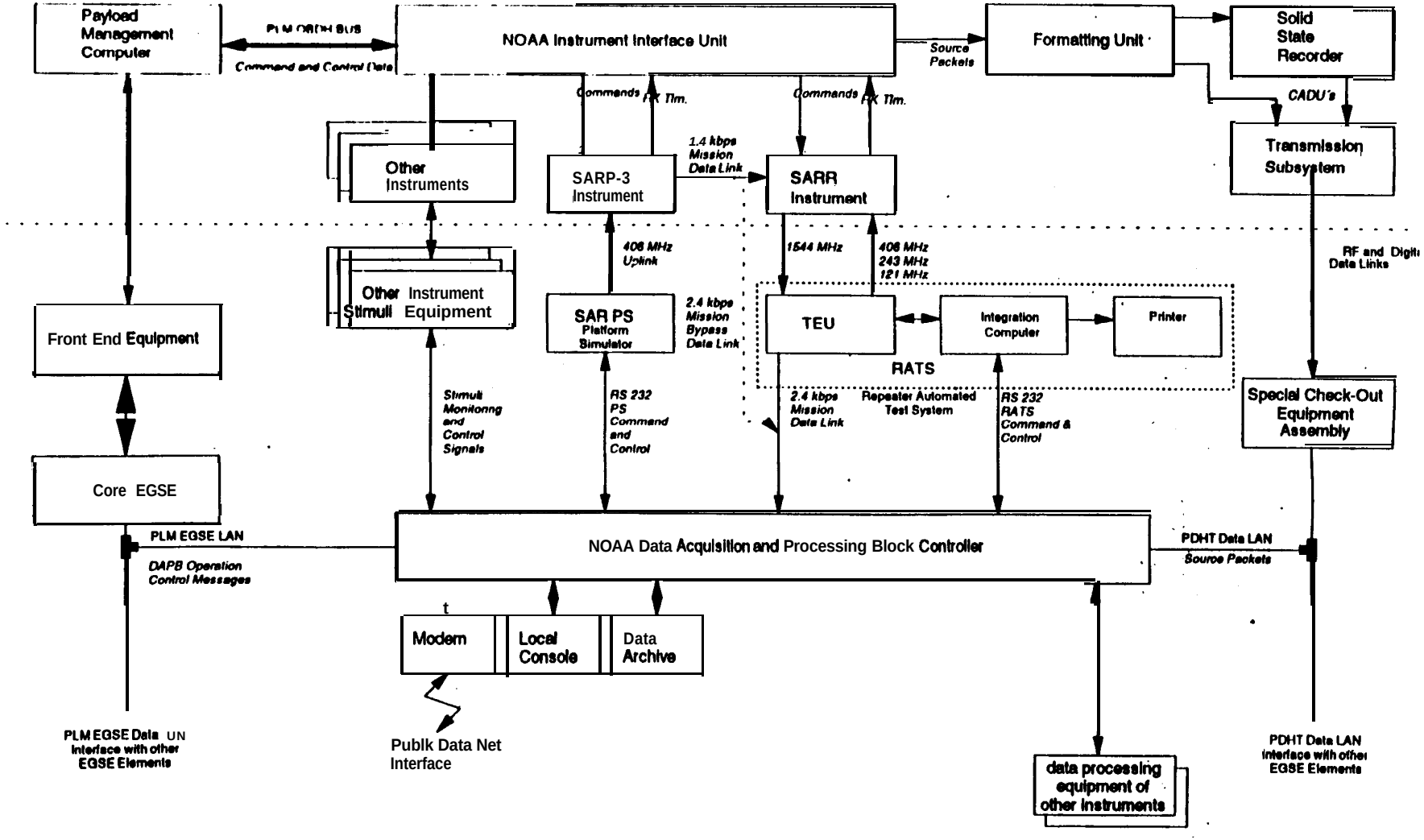

Fig. 5.2.1.1- I : Test Equipment Interfaces ***With PLM OCOE***

in Ambient Test / Thermal Vacuum Configuration

5.2.1.2.4. Mission Data electrical Interface

The following two 2400 bit/sec signals shall be simultaneously available from the RATS' Microdyne receiver and shall contain the same information :

Signal 1 : bipolar, –2.5V to +2.5V (50 ohms) ; and
Signal 2 : TTL, OV to +5V (50 ohms).

5.2.1.2.5. Mission Data Format

The mission data format is defined in the METOP SARP-3 ICD, § 3.3.

5.2.1.2.6. Stimulus/Feedback Data Handling Requirements

Transactions / messages exchanged between the RATS and the N-DAPB shall be logged in the DAPB controller.

Results from procedures executed in the RATS are kept inside the TEU and are automatically passed to the Integration Computer (IC) when the IC is used. Results are not be passed on to the DAPB by the IC. Failure status flags are transmitted to the DAPB by the IC when SARR or RATS failure occurs. See AD7 and AD8 for more information.

52.13. interface with Instrument provided Data Processing Equipment

N/A to SARR.

5.2.1.4. Measurement Data Evaluation

Measurement data in this context is the mission data (test messages) generated by the SARP-3 platform simulator and routed to the METOP 'provided N-DAPB via the SARR and the RATS. This data is evaluated as part of the SARP-3 specific check-out implemented in the N-DAPB as defined in the SARP-3 ICD, section 5.2.1.4. (TBC_{MET})

5.2.2. Interfaces with the PLM On-Board Equipment

5.2.2.1. Test Harness and Connectors

Not applicable.

5.2.2.2. Special Test Adapters (T-Junctions, Break-Out Boxes)

Instrument to PLM avionics interfaces are all via standard sub-D type connectors, therefore no special adapter is needed from the instrument.

The break-out of the 2.4 kbps signals for test purpose shall be performed by a METOP provided adaptor (TBC).

Instrument is supplied with connector savers.

5.2.23. Stimuli Source Configuration /Arrangement Requirement

N/A

5.23. Interfaces with other PLM GSE

During ground tests, the instrument shall-be connected to GN_2 supply via 0 13 mm polyethylene tubes.

5.2.4. Interfaces with AIT and Launch Site Facilities

5.2.4.1. Mains Power

The instrument test equipment will be operated from mains power via a METOP-provided isolation uansformer with the following output characteristics :

- Voltage : 230 V AC (± 10%). 10 A max., single phase
- Frequency : 50 Hz ± 1 Hz

The actual estimated steady state power consumption of the RATS is :

- 3.3 kVA single phase for the TEU
- 1.2 kVA single phase for the IC

All RATS equipment shall be delivered configured for European power.

5.2.4.2. Cooling / Thermal Dissipation Requiremenk

During ground tests the instrument (Transmitter Pallet) shall be cooled with GN_2. The flow rate shall be managed to maintain the pallet within the operating limits. The inlet temperature shall be 25 deg. C and the flow rate shall not exceed 0.028 m^3/hr.

5 3 . 4 3 . Purging Gas Requirements

N/A.

53.4.4. GN_2 / LN_2 Supply

For instrument cooling GN_2 per Fed Spec. BB-N-441b Type 1. Class 1. Grade A or equivalent shall be used.

52.45. Test Chamber Wall Feed-Through Panels

For TV test, four RF cable feed-throughs for the SARR shall be provided by METOP.

5.2.4.6. Public Data Net Communication Requirements

The METOP AIT and launch site facilities will provide access to a public data network in order to enable data exchange with Instrument Suppliers (e.g. for off-line data evaluation at the SARR Instrument Supplier premises).

For this purpose, dial-up modems will be used These modems are part of the RATS/TEU

5.2.4.7. Physical Interfaces

TEU : 300 kg ; dimensions : 203 cm (H) x 61 cm (W) x 152 cm (D)

IC : standard desktop PC footprint with monitor and mouse ; printer is 5 kg ; dimensions: 30 x 30 cm.

For set-up of the instrument test equipment an area of 20 m^2 as a minimum shall be will be provided in a temperature and humidity controlled class 100,000 clean area.

5.3. *INSTRUMENT* GROUND OPERATION REQUIREMENTS

53.1. General

instrument operational constraints are presented in §1.4.1. Test procedures may deviate from these.

Instrument modes and in orbit operations are described in § 1.4 and § 1.5.

Insmunenttelecommandsaredescribedin~3.2.2.

For the ground operations, the acknowledgement of the commands by the instrument is done using Analog Housekeeping and Digital B data from the instrument, as described in § 3.2.3..

Conditions for testing

1. One hour waiting period for frequency stability performance
2. Cooling of transmitter pallet during all ambient testing

53.2. Command and Control Sequences'

The testability of the instrument depends on the usage of equipment as outlined in Table 5.3.2-l below. Command and control sequences will be implemented in the check-can software of the METOP overall check-out equipment in terms of control files for automated testing. The control files will ensure that the instrument is operated and tested in accordance with the objectives given below. Control files will be coded on the basis of test procedures prepared by the METOP AIT team following inputs from the Instrument Supplier, and checked by the instrument supplier.

Control files shall take into account the generic operation requirements given above, and the special requirements for ambient and TV testing given in the following subchapters.

Test Configuration		EGSE	Purpose
Bench Test (Acceptance)			
	SARR Alone	*RATS*	*(Incoming Inspection)*
Integrated Test (Confirm that integration activities have not cause failure or perf. degradations.)			
	SARR With Accommodation Hardware	RATS	(Pre-Integration with Accommodation Hardware)
	SARR With Accommodation Hardware and SARP-3	RATS and SARP-3 EGSE	(Pre-Integration with Accommodation Hardware)
	SARR Integrated on PLM	RATS and SARP-3 EGSE	(Pre-Integration With NIU) (PLM Electrical Test) (PLM TV Test) (S/L Test)

Table** 5.3.2-l : **Test** Objectives Versus Test **Configurations

533.1. Ambient Conditions

TBD_{INST}

5 3 3 3 . **Thermal Vacuum Conditions**

TBD_{INST}

5 3 3 ; **Hazards / Precautions**

During METOP AIT activities, SARR will not experience RF levels in excess of those specified in § 3.9.1.2.

5.4. INSTRUMENT ACCEPTANCE AT AIT SITE

5.4.1. Unpacking/Packing and Handling Requirements

The instrument unpacking / packing and handling shall be performed according to the procedure from AD9.

5.4.2. Incoming Inspection

The incoming inspection starts as soon as [redacted] equipment arrives at the integration site. After unpacking under cleanroom conditions, the following will be carried out :

- Visual Inspection of Instrument and GSE
- Dimensional / flatness check
- Units Weighing
- Bench Testing

Bench Level Tests

Prior to installation to the PLM and electrical integration with PLM avionics, the instruments shall undergo a bench level check-out to demonstrate aliveness and instrument readiness for the subsequent system level AIT activities.

The instrument will be set up on a test bench (eg. a table with conductive surface) and shall be connected to the instrument testthose c a s e where instruments

panel handling. Then a series of check-out activities shall be carried out as required to validate the instrument readiness.

The test equipment (RATS/TEU) shall be provided by the Instrument Supplier and shall reside at the PLM and satellite AIV sites to support instrument troubleshooting if necessary. Operation of the instrument and its bench test equipment is done by the Instrument Supplier team with support of the METOP AIV team in accordance to the following instrument-provided procedures and manuals : AD7 and AD12.

5.43. Instrument Self-Compatibility Test

N/A

5.5. INTEGRATION ON METOP

'55.1. Pre-Integration

5.5.1.1. Pre-Integration with RF Accommodation Hardware

TBD_{MET}.

55.13; Pre-Integration

Prior to the installation in the PLM, the instrument will be pre-integrated with the NIU and parts of the NIU test equipment as well as the power conditioning unit. The corresponding set-up of on-board units and ground support equipment is shown in Figure 55.1-l.

The purposes of the pre-integration activities is to verify electrical interfaces between instruments and NIU and PCU, to develop instrument specific test sequences, and to refine and validate the DAPB operation separately. from the PLM level AIT in order to reduce the overall integration time.

The activities carried out with the instruments in the NIU pre-integration are elecaical integration and instrument IST's as described in § 5.5.3 below.

The physical arrangement of tbe instruments during pre-integration will be on desks with conductive surface. The interconnection to the NIU and PCU is accomplished with a METOP-provided test cable harness. Pre-integration activities are done in a clean room environment as required.

After completion of the pre-integration activities the instruments together with the NIU and the PCU will be installed in the payload module. Anabbreviated electrical integration and part of the IST's are then repeated.

5.5.2. Mechanical / Thermal Integration

The instrument mechanical / thermal integration includes the following activities :

- Physical installation to associated PLM panels according to agreed procedures including thermal filling and other
- Installation of thermal fillers as required
- Bonding measurement between equipment case and PLM structure
- Mechanical integration of pre-integrated instrument panels to the payload carrier structure

Interpallet harness tie down (restraints) : TBD_{MET}.

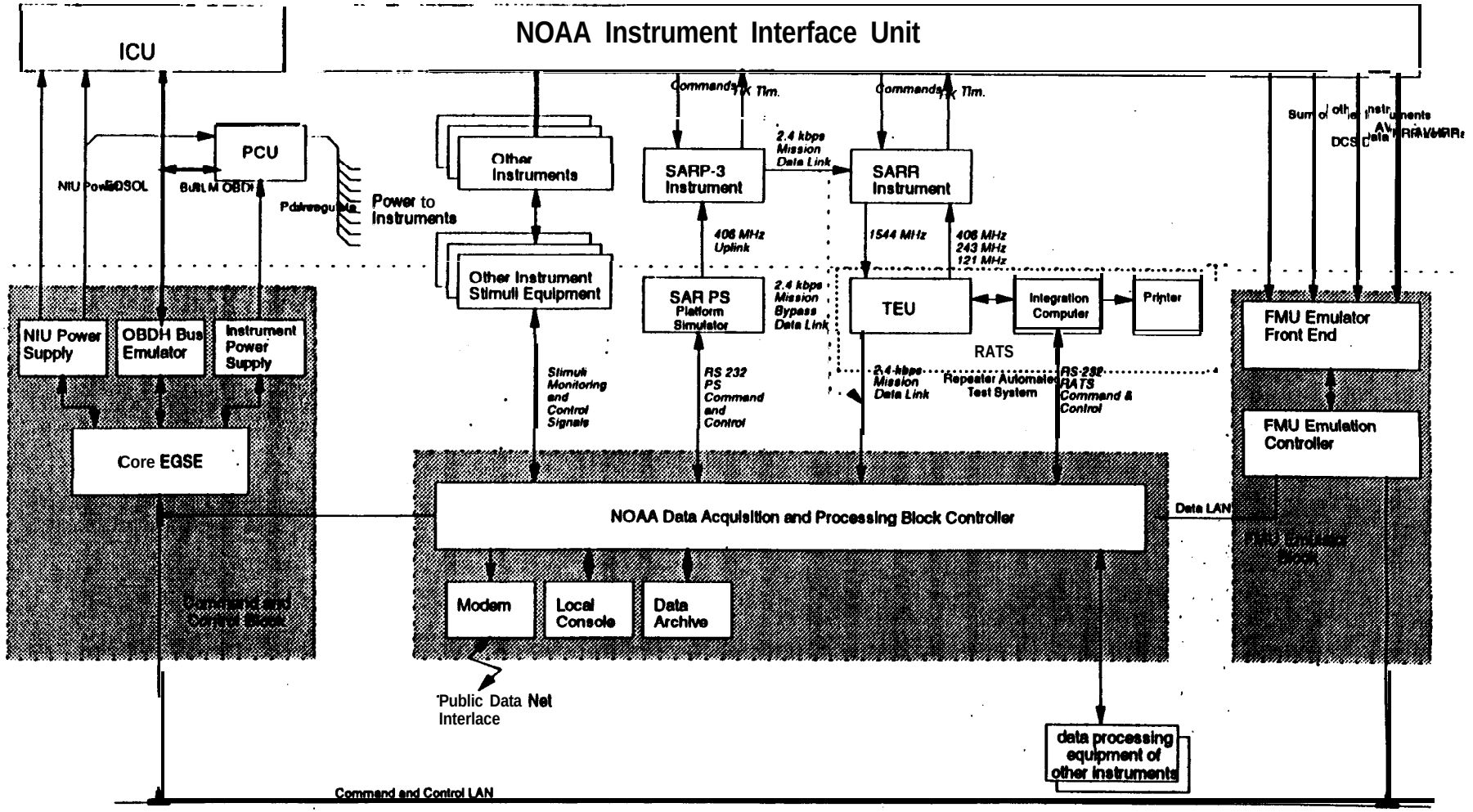

Figure 5.5.1-1 *: Set-Up for Instrument* ***Pre-Integration***

5.5.3. Electrical Integration and IST's

The electrical integration of the instrument is done after the integration of its GSE. The purpose of the electrical integration of the instrument on-board equipment is twofold : to verify that the interfaces between the instrument and the PLM avionics are as specified, and to accomplish instrument operation commissioning within the PLM environment.

The following activities are carried out for electrical interface verification :

Instrument Grounding/Isolation Check : before mating any connector with the system harness it is verified, that designated grounding pins are properly terminated to chassis, and other connector pins are isolated

Safety Check : it is verifiedbefore connecting the system harness, that there is no unexpected dangerous voltage, nor a short to chassis ground

T-Junction Tests : instrument connectors are mated with the PLM harness one by one via T-junctions, which allow measuring signal characteristics. Power connectors are mated first, followed by command interface connectors and telemetry interface connectors. The instrument is operated from the PLM Command & Control Block (CCB) by sending commands manually. Essential signal parameters such as rise/fall times, signal levels, signal timing, inrush currents and power consumption are recorded and compared against expected (specification) values.

The instrument electrical integration procedures will be prepared by the PLM AIT team on the basis of inputs from the Instrument Supplier, and reviewed and supported by the Instrument Supplier.

Verification of the instrument interfaces will be followed by an instrument IST. The purpose of this test is to perform a reference instrument checkout in the overall system environment

The instrument will be operated in all relevant modes including degraded modes and redundancy activation Full instrument operability validation is achieved in the IST. This comprises both the on-board equipment and the ground support equipment and checkout software. It is to be noted that the checkout software, at least the AIT data base with the TM/TC parameter definitions will be re-used during mission operation. Instrument specific control files will be refined and validated in the IST.

In addition co the above objectives, the IST serves to produce reference data sets for the subsequent environmental and system function test programs.

55.4. Integration of GSE

55.4.1. Integration of GSE with the Flight Equipment

For ground testing the instrument shall be connected to GN_2 purging equipment.

5.5.4.2. GSE Integration with PLM OCOE

The EGSE integration is done prior to the integration of the on-boa@ equipment. During this activity, the instrument-provided test equipment shall tie connected with the METOP provided PLM EGSE. Generally, EGSE integration basically consists of an end-to-end communication check to demonstrate full operability under control of the Command and Control Block (CCB).

The instrument GSE integration procedures will be prepared by the PLM AIT team on the basis of inputs from the Instrument Supplier, and reviewed and supported by the Instrument Supplier.

5.6. INSTRUMENT OPERATION CONSTRAINTS DURING PLM AND SATELLITE SYSTEM TESTS

5.6.1. System Environmental Test Levels

During ground test, the SARR environment shall be controlled by GN_2 cooling such that the transmitter temperature telemetry never exceeds the maximum temperature limit from § 2.3.2. In emergencies, when the maximum temperature limit is exceeded it shall be commanded OFF to meet this requirement.

Tbe nominal in-band power into each receiver port (J8, J9, and J10) shall not exceed -80 dBm. The maximum into each receiver shall not exceed -30 dBm (controlled by the RATS).

Due to the receivers crystal oscillator design, the frequency stability will be within specification only under vacuum conditions.

5.6.1.1. Structural Tests

TBD_{INST}

5.6.1.2. Thermal Tests

For thermal vacuum pump down, the instrument shall be commanded OFF and shall remain so for at least two hours after reaching 10^{-5} Torr (1.33 10^{-5} mbar).

5.6.1.3. EMC/RFC Tests

During instrument, PLM and satellite level testing the EMC levels as listed in § 3.8, 3.9 and 4.3 shall not be exceeded.

Static magnetic fields up to of 2 Gauss will not degrade the ultra stable oscillator performance. No damage will occur to the instrument at levels beloi this limit.

5.63. **Function** and **Performance Tests**

The following descriptions shall provide a better understanding of the system level tests and are to be understood as for information only.

5.6.2.1. System **Functional Tests (SFT)**

The system functional test will verify the overall system performance and operability in a series of mission relevant modes. Back up modes, degraded modes and mode transitions will be included. The SFT procedures wiil be composed of control files which have been validated during IST's.

5.6.23. Special **Performance** Test **(SPT)**

SPT's serve to execute specific performance verifications in the overall system configuration for all those parameters which have contributions from more than one subsystem or for teat cases which require a special set-up and operation condition. A typical example is a bit error performance testwhich involves elements of data acquisition, formatting and transmission.

For the instrument a full performance has been demonstrated as part of the instrument acceptance test program. and therefore no instrument specific performance testing is required on system level. Additional special performance tests on PLM level and higher levels are covered by automated procedures executed in the RATS.

Note : SARR performance testing does not require any laboratory equipment, but the RATS.

5.6.2.3. Abbreviated Functional Tests **(AFT)**

The abbreviated function test is composed of a subset of control files and procedures from the system functional test. Its purpose is to demonstrate system integrity after major set-up changes and after transport. No measurement data evaluation will be included in the AFT's but only a verification that the measurement data stream5 are present. Therefore, no instrument stimulus generation and feedback data acquisition will be done.

The use of sumulus of the RATS during the AFT is TBC_{MET}.

5.7. INSTRUMENT CONSTRAINTS ON GROUND ENVIRONMENTAL CONDITIONS

5.7.1. AIT Site

The connector J11 is plug-to-jack adapter and considered as flight hardware and shall remain installed at all times. TBC_{INST}

Test connector : N/A

The dust cover on the cooling tubes shall be removed before integration to the satellite.

Connector dust caps shall be installed when the instrument is not in use.

5.72. Launch Site

At the launch site, the SARR is always integrated into the satellite, unless it needs to be removed for repair work In that case, all handling conditions in place at the integration facility are expected to apply at the launch site.

5.73. Transportation

To avoid damage to the instrument it shall be transported in a sealed when not yet integrated to the spacecraft. For transport monitoring, shock recorders shall be used.

5.7.4. Storage

For instrument storage the sealed containers shall be used.

The storage temperamre extremes shall be as per § 2.3.2.1.

Purging and humidity requirements during storage are defined in the storage plan (AD10).

Other maintenance, as for example recalibration, is not planned during storage.

5.8. LAUNCH CAMPAIGN .

5.8.1. Launch Preparation

Check-Out on the Launch Range

Instrument launch operations before encapsulation of the satellite into the launcher fairing will be a series of functional tests as already done during the AIT phase. After encapsulation of the satellite, there will be only limited command and control access via umbilical to the service module and the payload module avionics. Therefore, instruments will generally not be operated after spacecraft encapsulation.

During ground test, the SARR environment shall be controlled by GN_2 cooling such that the transmitter temperature telemetry never exceeds the maximum temperature limit from § 2.3.2. Where environmental control is restricted, it shall be commanded OFF to meet this requirement, if necessary.

Launch preparation test : see constraints on ground test § 5.6.1.

Furthermore it has to be assured that the connector adaptor J11 is installed, TBC_{INST}

5.8.2. Red Tagged Items

- Dust cover on the cooling tubes

6. PRODUCT ASSURANCE

BLANK

Compliance of the SARR with the following PA requirements is NASA's responsibility.

The PA approach for the SARR is dealt within AD1. Specific PA constraints / rules are dealt within the following sections.

6.1. CLEANLINESS / CONTAMINATION

6.1.1. Deposited Contamination Level

At the insuument delivery to METOP, the deposited contamination levels shall be less than :

- External surfaces :

  Molecul[redacted]ition : $\leq 2.10^{-7}$ g/cm²

  Particulate contamination : level 500, as per MIL-STD-1246B

- Internal surfaces : levels compatible with the instrument performances.

These contamination levels shall be certified at delivery, and verification performed after packing / transportation and arrival to the METOP integration site.

6.1.2. Integration Facilities

The insuument, after delivery, wlll be integrated in a class 100 000 clean room, as per FED-STD-209D, or better.

6.13. Instrument Aperture Protection

N/A for SARR.

6.1.4. Purging

No purging is required for the SARR during METOP satellite or PLM level AIT activities (see also AD10).

During transit and during storage, the SARR units should be stored in its shipping container, that has been purged and back-filled with dry nitrogen. TBC_{SARR}

6.15. Space Conditioning

Bake-out of insuument harness and MLIs at 60 deg. C : TBD_{Instr}.

The last hot cycle of the thermal vacuum test performed at instrument level shall be maintained till the outgassing flux is less than 1.10" g/cm².hr for a duration of five successive hours. This shall be permanently monitored during the test by TQCMs facing the specimen. The temperature of this last

level shall be 60 deg. C (instrument unpowered), provided this does not harm any element of the instrument.

6.1.6. Contamination Witness Plate

The SARR is delivered with a permanently installed witness plate (mirror) on the instrument. This is used for further control by the Instrument Supplier of the contamination after delivery for integration to the METOP spacecraft. The position of this mirror is illustrated in the Mechanical Interface Drawing (TBD_{SARR})

At appropriate times, the witness plate will be removed and examined by the Instrument supplier for contaminants... during which time an alternate witness mirror will be mounted on the instrument. As a minimum, such controls shall be performed at delivery of the PLM, with all instruments integrated to the Satellite Contractor, before and after TB / TV tests, and before launch.

6.1.7. Decontamination Features/Heaters

N/A for the SARR.

6.1.8. Instrument Bagging

N/A for the SARR.

63. FAILURE PROPAGATION THROUGH THE INTERFACES

The failure propagation through the interfaces from the SARR to METOP is analysed within TBD_{SARR}.

The failure propagation through the interfaces from the METOP to SARR is analysed within TBD_{MET}.

6.3. SAFETY REGULATIONS

The SARR shall be compliant with the safety requirements from AD1.

The following is a list of hazards contained within the instrument, its associated Ground Support Equipment, and any other special equipment needed for transportation, handling, assembly, integration and test.

Hazard	Item
Radioactive Source	None
Toxic Sources	None
Corrosive Materials	None
Pressurized Systems	None
Ignition Sources	None
Pyrotechnics / Ordonance	None
Cryogenics / Cooling Fluid	None

Table 6.1/1 : Hazard List

The following is a list of consequences of failures of the instrument, its associated GSE aud any other transportation, handling,

	Reference to Safety
mechanical requirements	None
requirements of electrical	None
Unintentional firing	None
radiation requirements	None
Unintentional ignition	None
Release of debris	None
Leakage/	
Unintentional	None

Table 6.1/2 : Consequence of Failures