# IASI Level 1 Products

## *System Readiness Review*

**August 30, 2007**

*Prepared By:* Zhaohui Cheng[1], Tom King[1], Larisa Koval[1], Lihang Zhou[1], Walter Wolf[2], and Ken Jensen[3]

[1] Perot Systems Government Services
[2] NOAA/NESDIS/STAR
[3]Raytheon Information Solutions

# Review Outline

1. INTRODUCTION
2. TEST READINESS REVIEW REPORT
3. SYSTEM REQUIREMENTS
4. SYSTEM DESCRIPTION
5. SYSTEM READINESS
6. RISKS AND ACTIONS
7. SUMMARY AND CONCLUSIONS

# Review Agenda

| | |
|---|---|
| • Introduction | Lihang Zhou |
| • Test Readiness Review Report | Lihang Zhou |
| • System Requirements | Larisa Koval |
| • Break | |
| • System Description | Thomas King |
| • System Readiness – User Needs | Thomas King |
| • System Readiness – Products | Zhaohui Cheng |
| • Lunch | |
| • System Readiness for Operations | Thomas King |
| • System Readiness for Maintenance | Thomas King |
| • Break | |
| • Risks and Actions | Zhaohui Cheng |
| • Summary and Conclusions | Lihang Zhou |

1. INTRODUCTION
2. TEST READINESS REVIEW REPORT
3. SYSTEM REQUIREMENTS
4. SYSTEM DESCRIPTION
5. SYSTEM READINESS
6. RISKS AND ACTIONS
7. SUMMARY AND CONCLUSIONS

# Section 1 – Introduction

Presented by

Lihang Zhou
PSGS

# Level 1 Project Objectives

- Provide IASI thinned radiances (L1CT) within three hours of observation (or 30 minutes of data receipt from EUMETSAT) to NWS and DOD
  - » Calibrated and navigated IASI radiances
  - » Reconstructed radiances
  - » Principal components
  - » Software to reconstruct radiances

- Provide L1C IASI data from EUMETSAT to CLASS.

# Project Stakeholders – Operations and Maintenance

- **OSDPD (A.K. Sharma)**
  - » Run the IASI product processing system on the operation side

# Project Stakeholders – Development Team Roles

- NOAA/NESDIS/STAR
  - » Mitch Goldberg-P.I.
  - » Chris Barnet-P.I.
  - » Walter Wolf-Lead
- Perot Systems Government Services
  - » Lihang Zhou, Thomas King, Zhaohui Cheng, Wen Zhou, Antonia Gambacorta, Haibing Sun, Xingpin Liu, Larisa Koval
- Develop and test the IASI product processing system
- Distribute the IASI data and product
- Perform product validation

# IASI Product Processing System Organization Chart

**Customers/Users**

JCSDA, NWS, NCEP, GMAO
DOD, AFWA,NRL/FNMOC
NESDIS
IASI Science Team
CLASS

**IASI Project**

Mitch Goldberg (P.I. Division Chief)
Hank Drahos (Branch Chief)

**Research Algorithm**

Chris Barnet (Algorithm Lead)
Zhaohui Cheng (PC)
Antonia Gambacorta
(Algorithm Scientist)

**Development IPT**

Walter Wolf (Lead)

**Pre-Operational Algorithm**

Tom King (Programming Lead)
Wen Zhou (Programmer)
Haibing Sun (Simulation)

**Support**

Lihang Zhou (QA Lead)
Peter Keehn (CM)
Xingpin Liu (Web)
Larisa Koval (Documentation)

**Operations & Maintenance**

A.K. Sharma (Operations Lead)

# L1CT Project Plan

- **Tasks : 070531_iasi_projplan.ppt**
  - » Task assignments to stakeholders
- **Schedule (milestones)**
  - » Preliminary Design Review (PDR) – Sep. 29,2004
  - » Critical Design Review (CDR) – Jan. 12, 2006
  - » Test Readiness Review (TRR) – June 14, 2007
  - » **System Readiness Review (SRR) – Aug. 30, 2007**
  - » SPSRB Briefing – Sep. 21, 2007
  - » Commence operations – Sep. 28, 2007

# Project Timeline

| ID | Task Name |
|---|---|
| 1 | IASI L1C |
| 2 | Algorithm Development Phase |
| 3 | IPT Branch Lead informed to begin, prepare for PDR |
| 4 | Preliminary Design Review |
| 5 | Algorithm Development system defined |
| 6 | Preliminary System Development |
| 7 | Initial Archive Requirement identified |
| 8 | Quality Monitoring Concept defined |
| 9 | Long term maintantance concept defined |
| 10 | Test Case Processed |
| 11 | Operational and backup processing defined |
| 12 | Critical Design Review |
| 13 | System Development |
| 14 | Final archive requirement defined |
| 15 | Code is prepared for implementation |
| 16 | Pre-operational Phase |
| 17 | Operational and backup processing capabilities in place |
| 18 | Pre-operational product output evaluated & tested |
| 19 | Developed Operational Products implementation Plan |
| 20 | Evaluated and Modify Operational Documentation |
| 21 | Validation and Verification of Operational Quality Assurance for IASI Products |
| 22 | Validation and Verification of Monitoring capability for IASI Products |
| 23 | Test Readiness Review |
| 24 | System Readiness Review |
| 25 | OSDPD Contractor Staff Training for IASI Products System |
| 26 | Prepare for Transition to Operation |
| 27 | Code transition to Operations; all documentation is complete |
| 28 | Briefing SPSRB capability is ready to operational |
| 29 | Operational and backup capabilities is ready to operational |
| 30 | Operational Phase |
| 31 | SPSRB declares product operational |
| 32 | OSD updates Satellite Products database |

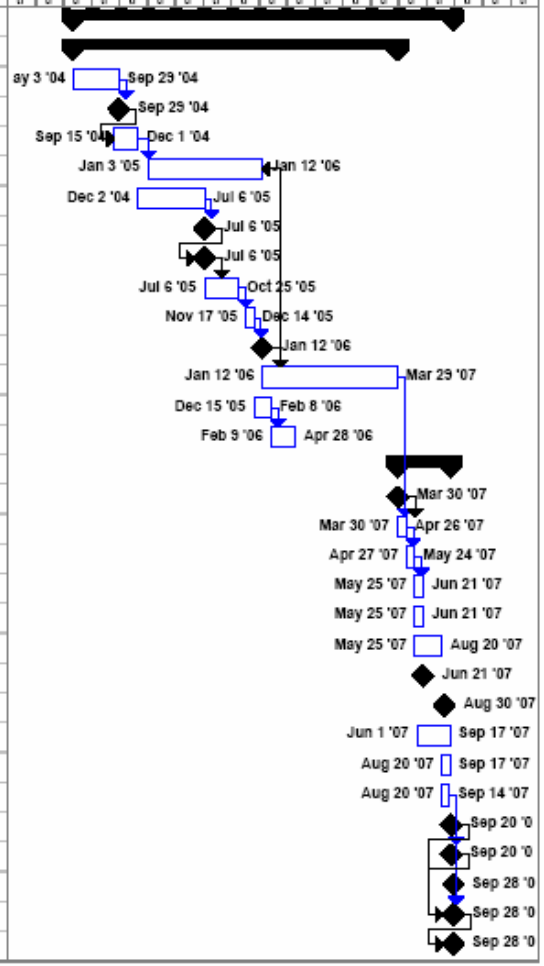

# Project Timeline – Preparation for Operations (1)

| ID | Task Name |
|---|---|
| 1 | **Weekly Meetings with IASI Operations Personnel** |
| 2 | Weekly Meeting with IASI Operational Personel |
| 18 | **L1CT System Description Document (SDD)** |
| 19 | Write SDD v1r0 |
| 20 | Review SDD v1r0 |
| 21 | Finalize SDD v1r0 |
| 22 | Place SDD v1r0 in project baseline |
| 23 | **L1CT Operations Manual (OM)** |
| 24 | Write OM v1r0 |
| 25 | Review OM v1r0 |
| 26 | Finalize OM v1r0 |
| 27 | Place OM v1r0 in project baseline |
| 28 | **Interface Control Document (ICD)** |
| 29 | Write ICD v1r0 |
| 30 | Review ICD v1r0 |
| 31 | Finalize ICD v1r0 |
| 32 | Place ICD v1r0 in project baseline |
| 33 | **L1CT System Maintenance Manual (SMM)** |
| 34 | Write SMM v1r0 |
| 35 | Review SMM v1r0 |
| 36 | Finalize SMM v1r0 |
| 37 | Place SMM v1r0 in project baseline |
| 38 | **L1CT Users Manual (UM)** |
| 39 | Write UM v1r0 |
| 40 | Review UM v1r0 |
| 41 | Finalize UM v1r0 |
| 42 | Place UM v1r0 in project baseline |
| 43 | **L1CT Risks** |
| 44 | Update list of project risks, based on TRR Report |
| 45 | Update risk mitigation plan, based on TRR Report |
| 46 | Review risk mitigation plan |
| 47 | Finalize risk mitigation plan |
| 48 | Provide SRD Risks slides |

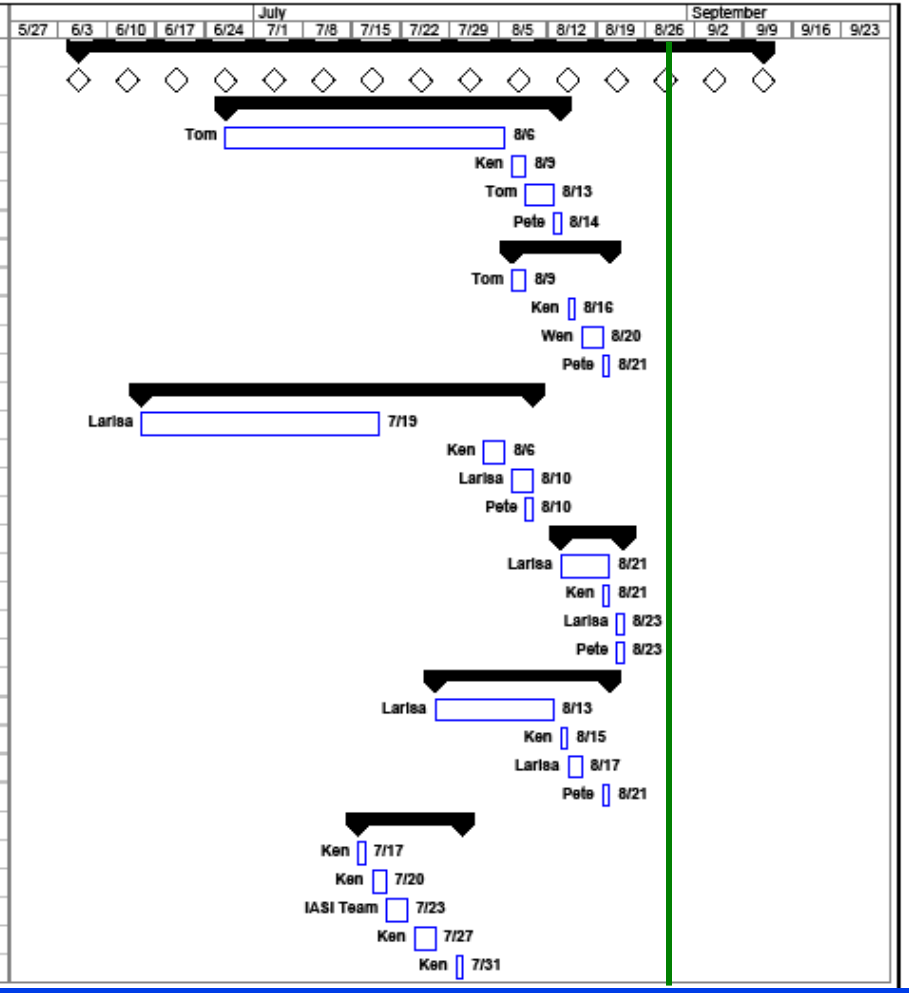

# Project Timeline – Preparation for Operations (2)

| ID | Task Name |
|---|---|
| 49 | **L1CT Actions** |
| 50 | Update list of actions, based on TRR Report |
| 51 | Update action closure plan, based on TRR Report |
| 52 | Review action closure plan |
| 53 | Finalize action closure plan |
| 54 | Provide TRD Actions slides |
| 55 | **L1CT Metadata Document (MDD)** |
| 56 | Write MDD v1r0 |
| 57 | Review MDD v1r0 |
| 58 | Finalize MDD v1r0 |
| 59 | Place MDD v1r0 in project baseline |
| 60 | **L1CT Unit Tests** |
| 61 | Conduct Unit Test # 1 |
| 62 | Conduct Unit Test # 2 |
| 63 | Conduct Unit Test # 3 |
| 64 | Conduct Unit Test # 4 |
| 65 | Conduct Unit Test # 5 |
| 66 | Debug, refine, retest units |
| 67 | **L1CT System Test** |
| 68 | Integrate product components |
| 69 | Prepare system test data |
| 70 | Complete System Test |
| 71 | Debug, refine, retest system |
| 72 | **L1CT Verification and Validation Report (VVR)** |
| 73 | VVR Template to Zhaohui and Tom |
| 74 | Document user needs in VVR |
| 75 | Document O&M needs in VVR |
| 76 | Document algorithm theoretical basis in VVR |
| 77 | Document results of unit tests in VVR |
| 78 | Document results of system test in VVR |
| 79 | Review VVR v1r0 |
| 80 | Finalize VVR v1r0 |
| 81 | Place VVR v1r0 into project baseline |

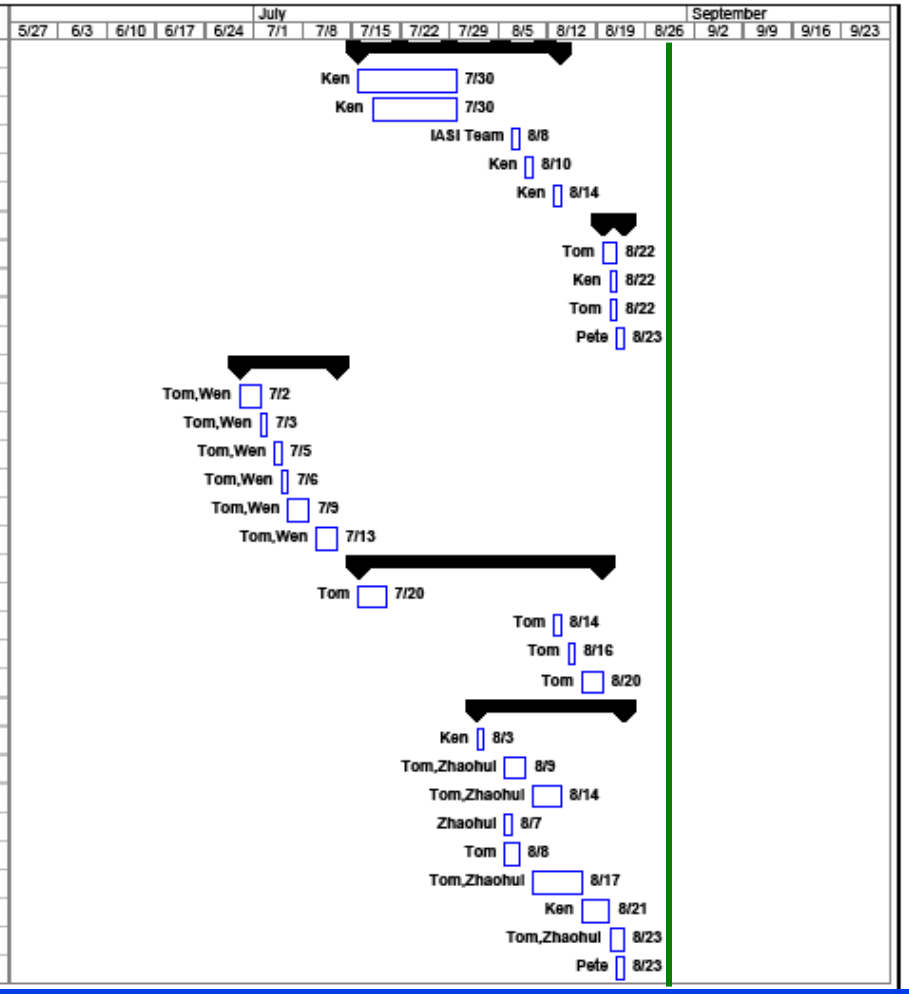

# Project Timeline – Preparation for Operations (3)

| ID | Task Name |
|---|---|
| 82 | **Requirements Allocation Document (RAD)** |
| 83 | Revise RAD to satisfy TRR actions |
| 84 | Review RAD v1r1 |
| 85 | Finalize RAD v1r1 |
| 86 | Place RAD v1r1in project baseline |
| 87 | **Project Plan** |
| 88 | Update project plan to include post-TRR tasks |
| 89 | Review project plan |
| 90 | Finalize project plan and slides |
| 91 | Place project plan in project baseline |
| 92 | **L1CT System Readiness Document (SRD)** |
| 93 | Write System Readiness Document (SRD) |
| 94 | Review SRD |
| 95 | Finalize draft SRD slides |
| 96 | Place draft SRD in project baseline |
| 97 | **L1CT Project Baseline Report (PBR)** |
| 98 | Prepare PBR v1r1 |
| 99 | Review PBR v1r1 |
| 100 | Finalize PBR v1r1 |
| 101 | Place PBR v1r1in project baseline |
| 102 | **L1CT System Readiness Review (SRR)** |
| 103 | Brief SRR Review Team |
| 104 | SRR artifacts available to TRR reviewers |
| 105 | SRD draft slides to TRR reviewers |
| 106 | SRR Dry Run |
| 107 | Revise SRD slides |
| 108 | Review and approve SRD slide revisions |
| 109 | Place final SRD in project baseline |
| 110 | Final SRD to SRR reviewers |
| 111 | Conduct SRR |
| 112 | Write System Readiness Review Report (SRRR) |
| 113 | Place SRRR in project baseline |

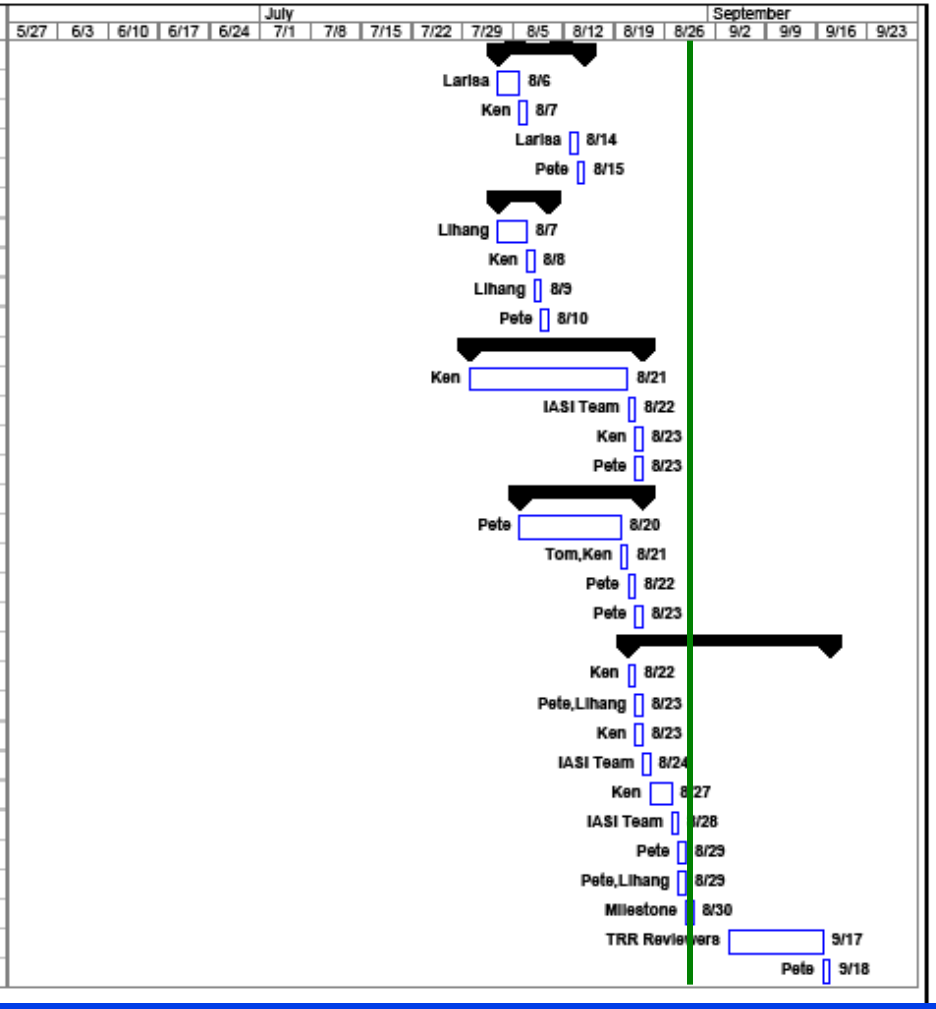

# Project Plan
# Stakeholder Involvement

- Development Team
  - » Coding and documentation
  - » Quality assurance
  - » Data verification and validation
  - » Configuration Management and archive
  - » Interface with operations
- Operation and Maintenance
  - » Code Acceptance
  - » Running system
  - » Monitoring
  - » Distribution
- Customers and/or Users
  - » Supply customer request
  - » Review project development
  - » Archive data
  - » Communicate with development team

# SRR Guidelines and Checklist

- Guidelines for the SRR reviewers are in STAR EPL process asset PRG-14.1
  - » Reviewers can access this document at **http://www.orbit.nesdis.noaa.gov/smcd/spb/iosspdt/qadocs/STAR%20PRG-14.1%20(SRR)%20v2r0.doc**

- The SRR reviewer checklist is in STAR EPL process asset CL-14.1.
  - » Reviewers can access this document at **http://www.orbit.nesdis.noaa.gov/smcd/spb/iosspdt/qadocs/STAR%20CL-14.1%20(SRR)%20v2r0.xls**

# SRR Report

- The SRR Report (SRRR) is a standard artifact of the STAR EPL process.
  - » The SRR reviewers should produce this report after conducting the SRR.
  - » The report will be a critical artifact for the SPSRB Operational Decision Briefing.
- Guidelines for the SRRR are found in STAR EPL process asset DG-14.6
  - » SRR reviewers can access this document at **http://www.orbit.nesdis.noaa.gov/smcd/spb/iosspdt/qadocs/STAR%20DG-14.6%20(SRRR)%20v2r0.doc**

# Review Objectives (1)

- **Review the Test Readiness Review Report (TRRR)**
  - » Focus on risks and actions
- **Review the System Requirements**
  - » Requirements Allocation Document (RAD)
  - » Focus on user needs, O&M needs
- **Review the System Description**
  - » System Description Document (SDD)
  - » Interface Control Document (ICD)
  - » Metadata Document (MDD)
  - » Project Baseline Report (PBR)

# Review Objectives (2)

- Review the System Readiness
  - » Verification and Validation Report (VVR)
  - » Readiness for Users – Users Manual (UM)
  - » Readiness for Operations – Operations Manual (OM)
  - » Readiness for Maintenance – System Maintenance Manual (SMM)
- Review risks and actions
  - » Identify open risks and actions
- Identify remaining tasks before operations may commence

1. INTRODUCTION
2. TEST READINESS REVIEW REPORT
3. SYSTEM REQUIREMENTS
4. SYSTEM DESCRIPTION
5. SYSTEM READINESS
6. RISKS AND ACTIONS
7. SUMMARY AND CONCLUSIONS

# Section 2 –
# Test Readiness Review Report

Presented by

Lihang Zhou
PSGS

# The IASI L1CT TRR Report (TRRR)

- The TRR Report (TRRR), a standard STAR EPL project artifact, is the approved report of the TRR reviewers
  - » SRR reviewers can access this document at **http://www.orbit.nesdis.noaa.gov/smcd/spb/iosspdt/qadocs/IASI%20L1CT%20TRR%20Report%20v1r1.doc**
- The purposes of the TRRR are:
  - » To provide documented evidence that the TRR was conducted and closed according to STAR EPL standards, with proper disposition of TRR entry criteria, exit criteria, and other Check List Items (CLIs)
  - » To provide updated status on risks, including new risks
  - » To provide updated status on actions, including new actions
  - » To establish the entry criteria and exit criteria for the next technical review (this System Readiness Review)

# TRR Check List Items

- The TRRR includes the disposition status for each of 79 TRR check list items (CLIs)
  - » 56 of the CLIs received “Pass” or “N/A” dispositions with no identified risk.
  - » 22 of the CLIs received a “Defer” disposition with associated risks and actions, **to be discussed in Section 6 of this SRD**
  - » **1 CLI received a “ Waive” disposition with no identified risk.**

# TRR "Waive" Items With No Risk

- CLI 7.2.2 – The Test Readiness Document (TRD) lists all outstanding issues, actions, and risks that require attention
  - » New actions that require attention were identified in the TRR Report. It is not necessary for these to be listed in the TRD, since the TRR Report is an artifact for this SRR and all these new actions will be addressed at this SRR (Section 6)

# TRR Exit Criteria

- There were 12 exit criteria for the TRR
- Four received a “Pass” or “Not Applicable (N/A)” disposition
- Eight received a “Defer” disposition with associated risks and actions (to be discussed in Section 6 of this SRD)

# TRR Exit Criteria Status – Exit Criteria 1 - 2

- Exit # 1 - CDR "Conditional Pass" items have been satisfactorily disposed of.
  - » **STATUS: N/A.** There were no CDR "Conditional Pass" items.
- Exit # 2 - CDR "Defer" items have been satisfactorily disposed of.
  - » **STATUS: DEFER.**
    - Documentation of algorithm theoretical basis is deferred to SRR. Actions CDR 1.7.9.1 and CDR 1.7.9.2 are still open.
    - Interface Control Document (ICD) is deferred to SRR. Actions CDR 1.7.13.1, CDR 1.7.13.2, and CDR 1.7.13.3 are still open.
    - Metadata Document (MDD) is deferred to SRR. Actions CDR 1.7.17.1, CDR 1.7.17.2, and CDR 1.7.17.3 are still open.
    - System Description Document (SDD) is deferred to SRR. Actions CDR 1.7.19.1 and CDR 1.7.19.2 are still open.

# TRR Exit Criteria Status – Exit Criteria 3 - 4

- Exit # 3 - The requirements allocation and RAD v1r0 are satisfactory
  - **STATUS: DEFER.**
    - Revisions to RAD are needed. Actions TRR 1.7.6.1, TRR 1.7.6.2, TRR 1.7.6.3, TRR 1.7.6.4, and TRR 1.7.6.5 have been added.
- Exit # 4 - External interfaces are satisfactory. An action to produce an Interface Control Document (ICD) has been included in the TRRR.
  - **STATUS: DEFER.**
    - ICD is deferred to SRR. Actions CDR 1.7.13.1, CDR 1.7.13.2, and CDR 1.7.13.3 are still open.
    - TRD description of external interfaces needs revision. Action 1.7.7.4 is still open.

# TRR Exit Criteria Status – Exit Criteria 5 - 6

- Exit # 5 - The software architecture is satisfactory. An action to describe the software architecture in a System Description Document (SDD) has been included in the TRRR.
  - » **STATUS: DEFER.**
    - A System Description Document (SDD) needs to be developed. The dependency tree document delivered for TRR does not show the relationships and flows between components. Action CDR 1.7.19.1 closure plan has been revised: show flows between system and product components in the SDD.
- Exit # 6 - The detailed design is satisfactory. An action to describe the detailed design in a System Description Document (SDD) has been included in the TRRR.
  - » **STATUS: DEFER.**
    - Design documentation presented at TRR is not sufficient. A System Description Document (SDD) needs to be developed. Actions CDR 1.7.19.1 and CDR 1.7.19.2 are still open.

# TRR Exit Criteria Status – Exit Criteria 7 - 8

- Exit # 7 - The unit test plan and UTP v1r0 are satisfactory
  - » **STATUS: DEFER**
    - Minor revisions to UTP v1r0 are needed. Actions TRR 1.7.10.1 and TRR 4.4.1.2 have been added. These will be deferred to SRR.
- Exit # 8 - Pre-operational code to implement the detailed design has been written according to STAR EPL standards and has been built into executable units.
  - » **STATUS: PASS**

# TRR Exit Criteria Status – Exit Criteria 9

- Exit # 9 - Pre-operational test data, including "truth" data, are satisfactory.
  - » **STATUS: DEFER**
    - Test data and truth data for all unit tests and system test should be delivered to Ops in the DAP.
    - Test data described in the UTP will not test error handling functions. Desirable to have input files with mixed good/bad data, to test whether good data are processed.
    - Desirable to have a stress test, where a larger than usual number of files are in the GFT to test unit level resources.
    - System level resource requirements should be documented for SRR.
    - Actions TRR 1.7.12.1 and TRR 1.7.12.2 have been added

# TRR Exit Criteria Status – Exit Criteria 10 - 12

- Exit # 10 - The project baseline and PBR v1r0 are satisfactory.
  - » **STATUS: DEFER**
    - Some inconsistencies between the PBR and the UTP need to be resolved. Actions TRR 1.7.13.1, TRR 1.7.13.2, and TRR 4.4.1.2 have been added. These have been deferred to SRR.
- Exit # 11 - The TRRR documents all approved changes to requirements, requirements allocation, external interfaces, software architecture, and detailed design since the CDR.
  - » **STATUS: PASS**
- Exit # 12 - The TRRR documents updated status of project risks and actions.
  - » **STATUS: PASS**

# TRR Report – Risks and Actions

- The TRRR includes an assessment of 31 risks, 21 of which remain open
- The TRRR includes the status of 102 risk-associated actions, 56 of which remain open
- The risks and actions will be addressed in Section 6 of this SRD

# TRR Report – SRR Entry Criteria

- The TRRR has established 13 entry criteria for this SRR
  - » The SRR reviewers should confirm that the entry criteria are satisfied and document the disposition of each item in the SRR Report

# IASI L1CT SRR – Entry Criteria # 1 - 3

- Entry # 1 - A Test Readiness Review Report (TRRR) has been written. The SRR reviewers have access to the approved version of the TRRR.
- Entry # 2 - High level tasks and project milestones have been documented in a Research Project Plan (RPP). The SRR reviewers have access to the approved version of the project file.
- Entry # 3 - A Requirements Allocation Document revision (RAD) has been written. The SRR reviewers have access to the approved version of the RAD. Open actions on the requirements and requirements allocation have been documented in the TRRR.

# IASI L1CT SRR – Entry Criteria # 4 - 6

- Entry # 4 - An Interface Control Document (ICD) has been written. The SRR reviewers have access to the approved version of the ICD. Open actions on the external interfaces have been documented in the TRRR.
- Entry # 5 - A System Description Document (SDD) has been written. The SRR reviewers have access to the approved version of the SDD. Open actions on the system description have been documented in the TRRR.
- Entry # 6 - A Metadata Document (MDD) has been written. The SRR reviewers have access to the approved version of the MDD. Open actions on the metadata description have been documented in the TRRR.

# IASI L1CT SRR – Entry Criteria # 7 - 9

- Entry # 7 - An Operations Manual (OM) has been written. The SRR reviewers have access to the approved version of the OM. Open actions on the operations documentation have been documented in the TRRR.
- Entry # 8 - A System Maintenance Manual (SMM) has been written. The SRR reviewers have access to the approved version of the SMM. Open actions on the maintenance documentation have been documented in the TRRR.
- Entry # 9 - A Users Manual (UM) has been written. The SRR reviewers have access to the approved version of the UM. Open actions on the users documentation have been documented in the TRRR.

# IASI L1CT SRR – Entry Criteria # 10 - 11

- Entry # 10 - Pre-operational code units, external interfaces, ancillary data, and system test data have been integrated into a product processing system in the operational test environment. The SRR reviewers have access to the product processing system. Open actions on the product processing system have been documented in the TRRR.
- Entry # 11 - A Verification and Validation Report (VVR) has been written. The SRR reviewers have access to the approved version of the VVR. Open actions on verification and validation have been documented in the TRRR.

# IASI L1CT SRR – Entry Criteria # 12 - 13

- Entry # 12 - A Project Baseline Report (PBR) has been written. The TRR reviewers have access to the approved version of the PBR.
- Entry # 13 - A System Readiness Document (SRD) has been written. SRR review objectives are clearly stated in the SRD. Deviations from the STAR EPL standard objectives for an SRR have been approved.

# IASI L1CT – Tailored SRR Entry Criteria

- The standard SRR entry criteria call for open actions to have been documented in the Code Unit Test (CUTR) Report.
- Because a CUTR has been waived for the IASI L1CT project, the IASI L1CT SRR entry criteria instead call for open actions to have been documented in the report from the last IASI review, the Test Readiness Review (TRR).
- There is no extra risk caused by this tailoring, since the TRR Report provides the necessary documentation on the actions to be addressed at this SRR.

# IASI L1CT – Waived SRR Entry Criteria

- One standard SRR entry criteria item has been waived – "An Algorithm Theoretical Basis Document (ATBD) has been written. The SRR reviewers have access to the approved version of the ATBD. Open actions on the algorithm theoretical basis have been documented in the CUTRR."
- An ATBD has been waived to mitigate schedule risk.
- The risk due to the waiving of an IASI L1CT ATBD has been captured in Risk # 4, to be addressed in Section 6 of this SRD.

# TRR Report – SRR Exit Criteria

- The TRRR has established 14 exit criteria for this SRR
  - » The SRR reviewers should confirm that the exit criteria are satisfied and document the disposition of each item in the SRR Report

# IASI L1CT SRR – Exit Criteria # 1 - 5

- Exit # 1 - TRR "Conditional Pass" items have been satisfactorily disposed of.
- Exit # 2 - TRR "Defer" items have been satisfactorily disposed of.
- Exit # 3 - The Project Plan is satisfactory.
- Exit # 4 - The requirements allocation and RAD are satisfactory.
- Exit # 5 – The external interfaces and ICD are satisfactory.

# IASI L1CT SRR – Exit Criteria # 6 - 10

- Exit # 6 – The system description and SDD are satisfactory.
- Exit # 7 - The metadata and MDD are satisfactory.
- Exit # 8 - The operations procedures, training, tools, and documentation are satisfactory.
- Exit # 9 - The system maintenance procedures and documentation are satisfactory.
- Exit # 10 - The delivery procedures, tools, training, support services, and documentation available to the users are satisfactory.

# IASI L1CT SRR – Exit Criteria # 11 - 14

- Exit # 11 - System test results and VVR are satisfactory.
- Exit # 12 - The project baseline and PBR are satisfactory.
- Exit # 13 - The SRRR documents updated status of project risks and actions. The risk status is acceptable for commencement of operations.
- Exit # 14 - The integrated product processing system is ready for installation in the operations environment.

# IASI L1CT – Tailored SRR Exit Criteria

- The standard SRR exit criteria # 1 – 2 call for CUTR "Conditional Pass" and "Defer" items to be satisfactorily disposed of.
- Because a CUTR has been waived for the IASI L1CT project, the IASI L1CT SRR exit criteria instead call for TRR "Conditional Pass" and "Defer" items to be satisfactorily disposed of.
- The extra risk caused by this tailoring is that standard CUTR items involving unit test results and the system test plan have not been addressed. This risk is assigned to two new risks (Risks # 32 and 33, see Section 6 of this SRD).

# IASI L1CT – Waived SRR Exit Criteria

- One standard SRR exit criteria item has been waived – “The algorithm and ATBD are satisfactory.”
- An ATBD has been waived to mitigate schedule risk.
- The risk due to the waiving of an IASI L1CT ATBD has been captured in Risk # 4, to be addressed in Section 6 of this SRD.

1. INTRODUCTION
2. TEST READINESS REVIEW REPORT
3. SYSTEM REQUIREMENTS
4. SYSTEM DESCRIPTION
5. SYSTEM READINESS
6. RISKS AND ACTIONS
7. SUMMARY AND CONCLUSIONS

# Section 3 – System Requirements

Presented by

Larisa Koval
PSGS

# Identification of System Requirements

- Requirements are derived from the documented needs and expectations of approved customers, users, and operators of the product processing system and its end products
- Requirements identification is a process of turning these needs and expectations into a specific set of requirements on the product processing system that balances needs and expectations with practical constraints.
- The following questions need to be answered:
  - » Why are the products being produced (Customer Needs)?
  - » How will the products be used (Customer Expectations)?
  - » How should the products be produced (Operations Concept)?

# Why Are The Products Being Produced?

- CLASS, NCEP, FNMOC/NRL, GMAO, JCSDA need IASI Level 1CT products from METOP
- STAR needs Level L1CT product that includes principal components
- AFWA needs IASI Level 2 products from METOP in BUFR format

# Customer Needs - IASI L1CT Products From METOP

- Basic Product Requirement 1.0 - The IASI-L1C Product Processing System (PPS) shall generate IASI Level 1CT (thinned radiances) product.
  - » Derived Requirement 1.1 - The IASI-L1C PPS will read IASI L1C data from EUMETSAT PFS binary files.
  - » Derived Requirement 1.2 - The IASI-L1C PPS will apply scaling factors and unit conversions.
  - » Derived Requirement 1.3 - The IASI-L1C PPS shall develop software to perform subsetting.
  - » Derived Requirement 1.4 - Because user request indicates that the STAR IASI scientists will pick channels subset at a later time, the system must be flexible to generate different subsets.
  - » Derived Requirement 1.5 - The IASI-L1C PPS will perform validation and verification procedures.

# Customer Needs – IASI L1CT Products That Includes Principal Components

- Basic Product Requirement 2.0 - The product must include principal components.
  - » Derived Requirement 2.1 - The IASI-L1C PPS must develop software to generate principal components and reconstructed radiances.
    - – Derived Requirement 2.1.1 - IASI L1C PPS shall develop the software to generate the global coverage input datasets used for generating principal components.
  - » Derived Requirement 2.2 - The IASI-L1C PPS must perform validation and verification procedures.
    - – Derived Requirement 2.2.1 - IASI-L1C PPS shall develop software to plot gridded datasets. This will plot global coverage of reconstructed radiances, principal components, and reconstruction scores to verify that the subset data are physically reasonable.

# Customer Needs – IASI Level 2 Products from METOP in BUFR format

- Basic Product Requirement 8.0 - The IASI-L1C PPS shall distribute METOP instrument Level 2 products (temperature and moisture profiles) in BUFR format via NRT/GTS link
  - » Derived requirement 8.1 – The IASI-L1C PPS shall develop software to transfer data to the Shared Processing Network (SPN)

# How Will The Products Be Used? (1)

- IASI L1CT BUFR will be used by NWP centers for forecasting and re-analysis efforts.
  - » Read, check, and process EUMETSAT BUFR files
  - » Must develop subsetting capability
  - » BUFR format for products
  - » Supply BUFR table and subset channel and frequency list
  - » Timeliness requirements
  - » Early release of data to perform impact studies
  - » Interaction with ingest and distribution machines
  - » Users Manual
- EUMETSAT IASI L1C PFS files will be used as the archive format.
  - » Interaction with archive and development of data submission agreement.
  - » Generation of associated metadata.
  - » Interaction with ingest and distribution machines
  - » Users Manual

# How Will The Products Be Used? (2)

- Metadata will be used by the archive to aid the archive search tools.
  - » Need software to generate the metadata
  - » Interaction with ingest and distribution machines
  - » Users Manual
- Global grids, binaries, and matchups will be used for ongoing validation efforts by the STAR V&V and development team.
  - » Need to develop code to generate V&V products
  - » Gridded format (GrADS readable)
  - » Ingest of GFS and GDAS forecasts for grids
  - » Users Manual

# User Expectations – BUFR Format

- Basic Product Requirement 3.0 - The IASI-L1C PPS shall write data into BUFR format.
  - » Derived Requirement 3.1 - The IASI-L1C PPS must develop software to write data into BUFR format.
  - » Derived Requirement 3.2 - The IASI-L1C PPS must release test/pre-operational BUFR files prior to transition to operations so users may test their ingestion, reading, and processing software. For these pre-operational data, a server from which they will obtain the data must also be identified.
  - » Derived Requirement 3.3 - The IASI-L1C PPS will supply user with BUFR table as well as the IASI L1CT channel subset and frequency list.

# User Expectations – Latency

- **<u>Basic Product Requirement 4.0</u> -** The IASI-L1C PPS shall provide IASI L1CT products within three hours of observation (or 30 minutes of data received from EUMETSAT) and no later than 36 hours to NWS and DOD. The data should reach the user prior to forecast cycles.
  - » **<u>Derived Requirement 4.1</u> -** The IASI-L1C PPS shall develop the software to provide simultaneous processing on multiple granules and to check for new data on the remote server.
  - » **<u>Derived Requirement 4.2</u> -** The software that directly handles and processes data must be written in a language that can be compiled and optimized as executable code on the target platform.

# User Expectations – Operational Provider

- **<u>Basic Product Requirement 5.0</u>** - The IASI system will run in the NOAA operations at OSDPD.

# Operator Expectations – Operations Documents

- Derived Requirement 5.1 - The IASI development team must supply the SPSRB set of required system, operations, and maintenance documentation.

# Operator Expectations – Training and Support

- Derived Requirement 5.2 - The IASI development team will interact with the OSDPD personnel for system training and support.

# Operator Expectations – Operations Monitoring

- Derived Requirement 5.3 - The IASI development team will interact with the OSDPD monitoring system (OPUS).

# Operator Expectations – Operations Code

- Derived Requirement 5.4 - The IASI development team will provide updates to the IASI system code throughout the project life cycle.
- Derived Requirement 5.5 - All the IASI system code must be able to run on operational target platform (IBM P570, AIX 5.3).
- Derived Requirement 5.6 - Operational code must be robust such that it can handle errors in the data stream and exit gracefully in the event of an error that may arise due to problems with the file or a limitation of the code.

# How Should The Products Be Produced?

- Ingest instrument and ancillary data from the external servers (GFT and DDS).
- Generate products for CLASS (metadata).
- Generate user requested subsets of channels and footprints and principal components.
- Generate products for validation users.
- Transfer products to distribution servers (DDS and SPN).

# Operations Concept – Ingest and Delivery

- **<u>Basic Product Requirement 6.0</u> -** The IASI-L1C PPS will be able to interact with remote ingest and distribution servers.
  - » <u>Derived Requirement 6.1</u> - The IASI-L1C PPS shall develop software to automate transmission of data (system input and output).
    - – <u>Derived Requirement 6.1.1</u> - The ingest software should be able to re-ingested files if the original are incomplete or damaged.

# Operations Concept – Product Archive

- Basic Product Requirement 7.0 - The IASI-L1C PPS shall interact with the NCDC CLASS archive facilities to archive IASI data and metadata products.
  - » Derived Requirement 7.1 - The IASI-L1C PPS will adhere to the Data Submission Agreement with CLASS.
  - » Derived Requirement 7.2 - The IASI-L1C PPS will generate metadata.

# Operations Concept – Subsetting

- Basic Product Requirement 1.0 - The IASI-L1C Product Processing System (PPS) shall generate IASI Level 1CT (thinned radiances) product.
  - » Derived Requirement 1.3 - The IASI-L1C PPS shall develop software to perform subsetting.
  - » Derived Requirement 1.4 - Because user request indicates that the STAR IASI scientists will pick channels subset at a later time, the system must be flexible to generate different subsets.

# Operations Concept – Validation

- Derived Requirement 1.5 - The IASI-L1C PPS will perform validation and verification procedures.
  - » Derived Requirement 1.5.1 – IASI-L1C PPS will send test products in near real-time mode to customers to ensure the product meets customer's needs and to allow them to test their product ingestion.
  - » Derived Requirement 1.5.2 – IASI-L1C PPS shall develop software to plot gridded datasets. This will plot global coverage of instrument data to verify that the input data can be read completely and that values are physically reasonable.
  - » Derived Requirement 1.5.3 - IASI-L1C PPS shall have the capability to check that BUFR files and generated correctly in near real-time.
  - » Derived Requirement 1.5.4 -IASI-L1C PPS shall perform routine data range checks in near real time to flag anomalous values.
  - » Derived Requirement 1.5.5 - IASI L1C PPS shall develop the software to generate matchup datasets between satellite measurements and radiosondes.

# Allocation of Requirements

- The purpose of requirements allocation is to identify product and system components and trace each component to one or more requirement so that a system architecture that will meet all project requirements can be designed
  - » The System Description (Section 4) will include a trace of system components to the requirements
- Requirements and their allocation to system components and product components of the product processing system are documented in the Requirements Allocation Document (RAD)

# Project Requirements Have Been Documented

- **Requirements Allocation Document (RAD)**
  - » Contains the basic and derived requirements for the work products
  - » Contains the allocation of the requirements to system components and product components
    - – Includes an allocation matrix that relates each component to the requirements
    - – Notes updates to the requirements allocation since the previous version

# New Requirements Since TRR – Requirement 1.5.1

- Requirement 1.5.1 – IASI L1C PPS will send test products in near real-time mode to customers to ensure the product meets customer's needs and to allow them to test their product ingestion.
  - » **Derived from Requirement 1.5 - The IASI L1C PPS will perform validation and verification procedures.**
  - » No effect on project plan, as this was already planned
  - » No added risk or necessary action, as this was already planned

# New Requirements Since TRR – Requirement 1.5.2

- Requirement 1.5.2 – IASI-L1C PPS shall develop software to plot gridded datasets.
  - » **Derived from Requirement 1.5 - The IASI L1C PPS will perform validation and verification procedures.**
  - » Added to verify that the input data can be read completely and that values are physically reasonable
  - » No effect on project plan, as this software is already developed
  - » No added risk or necessary action, as this software is already developed

# New Requirements Since TRR – Requirement 1.5.3

- Requirement 1.5.3 – IASI L1C PPS shall have the capability to check that BUFR files and generated correctly in near real-time.
  - » **Derived from Requirement 1.5 - The IASI L1C PPS will perform validation and verification procedures.**
  - » Added to verify the BUFR output files
  - » No effect on project plan, as this capability is already developed
  - » No added risk or necessary action, as this capability is already developed

# New Requirements Since TRR – Requirement 1.5.4

- Requirement 1.5.4 – IASI L1C PPS shall perform routine data range checks in near real time to flag anomalous values.
  - » **Derived from Requirement 1.5 - The IASI L1C PPS will perform validation and verification procedures.**
  - » Added to monitor data quality
  - » No effect on project plan, as this capability is already developed
  - » No added risk or necessary action, as this capability is already developed

# New Requirements Since TRR – Requirement 1.5.5

- Requirement 1.5.5 – IASI L1C PPS shall develop the software to generate matchup datasets between satellite measurements and radiosondes.
  - » **Derived from Requirement 1.5 - The IASI L1C PPS will perform validation and verification procedures.**
  - » Added for validation of product performance
  - » No effect on project plan, as this software is already developed
  - » No added risk or necessary action, as this software is already developed

# New Requirements Since TRR – Requirement 1.5.6

- Requirement 1.5.6 – Validation datasets must be made available to the validation team prior to transition to operations so validation tools can be developed and refined.
  - » **Derived from Requirement 1.5 - The IASI L1C PPS will perform validation and verification procedures.**
  - » Added for validation of product performance
  - » No effect on project plan, as this software is already developed
  - » No added risk or necessary action, as this software is already developed

# New Requirements Since TRR – Requirement 2.1.1

- Requirement 2.1.1 – IASI L1C PPS shall develop the software to generate the global coverage input datasets used for generating principal components.
  - » **Derived from Requirement 2.1 - The IASI L1C PPS must develop software to generate principal components and reconstructed radiances.**
  - » Added for necessary input datasets to generate principal components
  - » No effect on project plan, as this software is already developed
  - » No added risk or necessary action, as this software is already developed

# New Requirements Since TRR – Requirement 2.2.1

- Requirement 2.2.1 – IASI L1C PPS shall develop software to plot gridded datasets.
  - » **Derived from Requirement 2.2 - The IASI L1C PPS must perform validation and verification procedures for the principal components and reconstructed radiances.**
  - » Added for capability to verify that the subset data are physically reasonable
  - » No effect on project plan, as this software is already developed
  - » No added risk or necessary action, as this software is already developed

# New Requirements Since TRR – Requirement 3.2

- Requirement 3.2 – IASI L1C PPS must release test/pre-operational BUFR files prior to transition to operations so users may test their ingestion, reading, and processing software. For these pre-operational data, a server from which they will obtain the data must also be identified.
  - » **Derived from Requirement 3.0 The IASI-L1C PPS shall write data into BUFR format. NWP Centers require BUFR as an ingest format**
  - » Added to satisfy operations request
  - » No effect on project plan, as this was already done
  - » No added risk or necessary action, as this was already done

# New Requirements Since TRR – Requirement 3.3

- Requirement 3.3 – IASI L1C PPS must provide user with the L1CT BUFR table as well as the IASI L1CT channel subset and frequency list.
  - » **Derived from Requirement 3.0 The IASI-L1C PPS shall write data into BUFR format. NWP Centers require BUFR as an ingest format**
  - » Added to satisfy operations request
  - » No effect on project plan, as this was already done
  - » No added risk or necessary action, as this was already done

# New Requirements Since TRR – Requirement 5.5.1

- Requirement 5.5.1 - Sufficient amount of disk space will be allocated for all IASI primary and ancillary data, resource files, tools and system code.
  - » **Derived from Requirement 5.5 - All the IASI system code must be able to run on operational target platform (IBM P570, AIX 5.3).**
  - » Added to satisfy operations request for resource requirements
  - » No effect on project plan, as current resources meet the requirement
  - » No added risk or necessary action, as current resources meet the requirement

# New Requirements Since TRR – Requirement 5.5.2

- Requirement 5.5.2 - The IASI L1C PPS shall have sufficient amount of memory for the entire process to run.
  - » **Derived from Requirement 5.5 - All the IASI system code must be able to run on operational target platform (IBM P570, AIX 5.3).**
  - » Added to satisfy operations request for resource requirements
  - » No effect on project plan, as current resources meet the requirement
  - » No added risk or necessary action, as current resources meet the requirement

# New Requirements Since TRR – Requirement 5.5.3

- Requirement 5.5.3 - The IASI L1C PPS shall have access to the DDS, GFT, and SPN.
  - » **Derived from Requirement 5.5 - All the IASI system code must be able to run on operational target platform (IBM P570, AIX 5.3).**
  - » Added to provide access to the external interface sources needed to meet product requirements
  - » No effect on project plan, as current design meets the requirement
  - » No added risk or necessary action, as current design meets the requirement

# New Requirements Since TRR – Requirement 5.5.4

- Requirement 5.5.4 - All necessary software will be installed on operational target platform.
  - » **Derived from Requirement 5.5 - All the IASI system code must be able to run on operational target platform (IBM P570, AIX 5.3).**
  - » Added to ensure that the software will run in the operations environment
  - » No effect on project plan, as this was always planned
  - » No added risk or necessary action, as planned software installation is not changed by this requirement

# New Requirements Since TRR – Requirement 5.7

- Requirement 5.7 - The test, development, and production hardware should be identical and have the same external interfaces.
  - » **Derived from Requirement 5.0 - The IASI system will run in the NOAA operations at OSDPD.**
  - » Added to ensure a low risk transition to operations
  - » No effect on project plan, as this was always planned
  - » No added risk or necessary action, as planned hardware installation and interfaces are not changed by this requirement

# New Requirements Since TRR – Requirement 8.0

- Requirement 8.0 - The IASI-L1C PPS shall distribute METOP instrument Level 2 products (temperature and moisture profiles) in BUFR format via NRT/GTS link.
  - » Derived Requirement 8.1 - The IASI L1C PPS shall develop software to transfer data to the Shared Processing Network (SPN).
  - » Added to meet AFWA request
  - » Effect on project plan – Additional task to write an ftp script, but this is minor
  - » Added risk and actions – Discussed in Section 6 of this SRD (ACTION SRR 0.4.1, associated with Risk # 12)

# Requirements Allocation Changes Since TRR (1)

- New derived requirement 1.5.1 allocated to IASI_L1C_Subsetter.ksh
- New derived requirement 1.5.2 allocated to Global Grids unit
- New derived requirement 1.5.3 allocated to program main_iasi_bufr_to_netcdf.f90
- New derived requirement 1.5.4 allocated to program main_iasi_level1c_subsetter.cpp
- New derived requirement 1.5.5 allocated to programs main_iasi_global_matchups.f90, main_iasi_fullglobal_binary.f90, main_iasi_loc_binary.f90
- No effect on project plan, as this software is already developed
- No added risk or necessary action, as this software is already developed

# Requirements Allocation Changes Since TRR (2)

- New derived requirement 2.1.1 allocated to program main_iasi_2scan_binary.f90
- New derived requirement 2.2.1 allocated to programs plot_pcs.gs and plot_fullband.gs
- No effect on project plan, as this software is already developed
- No added risk or necessary action, as this software is already developed and validated

# Requirements Allocation Changes Since TRR (3)

- New derived requirement 5.5.1 allocated to IASI Operations and Test Machine System Requirements Document (08/14/06) (NESDIS/STAR/IPD, 2006)
- New derived requirement 5.5.2 allocated to **(NESDIS/STAR/IPD, 2006)**
- New derived requirement 5.5.3 allocated to **(NESDIS/STAR/IPD, 2006)**
- New derived requirement 5.5.4 allocated to **(NESDIS/STAR/IPD, 2006)**
- New derived requirement 5.7 allocated to **(NESDIS/STAR/IPD, 2006)**
- No effect on project plan because this document already exists
- No added risk or necessary action because this document already exists

# Requirements Allocation Changes Since TRR (4)

- New basic requirement 8.0 and its derived requirement 8.1 allocated to Check_L1C unit (script Run_Transfer_L2.pl)
- No effect on project plan, as this script is already developed
- No added risk or necessary action, as this script is already developed

1. INTRODUCTION
2. TEST READINESS REVIEW REPORT
3. SYSTEM REQUIREMENTS
4. SYSTEM DESCRIPTION
5. SYSTEM READINESS
6. RISKS AND ACTIONS
7. SUMMARY AND CONCLUSIONS

# Section 4 – System Description

Presented by

Tom King
PSGS

# System Description Documentation

- The IASI L1CT Product Processing System (PPS) is described in three documents to be delivered to operations
- The **System Description Document (SDD)** http://www.orbit.nesdis.noaa.gov/smcd/spb/iosspdt/qadocs/IASI_SDD_1.0.doc describes the key components of the PPS at a level of detail necessary to effectively perform system administrative and reactive maintenance functions
- The **Interface Control Document (ICD)** http://www.orbit.nesdis.noaa.gov/smcd/spb/iosspdt/qadocs/IASI_ICD_1.0.doc describes each input, intermediate and output data set at a level of detail sufficient for maintenance personnel to locate it and identify processing errors associated with it
- The **Metadata Document (MDD)** http://www.orbit.nesdis.noaa.gov/smcd/spb/iosspdt/qadocs/IASI_MDD_1.0.doc describes the FGDC-compliant metadata generated by the PPS

# The IASI L1CT Product Processing System

- The IASI L1CT PPS consists of an On-Line System and an Off-Line System.
- The On-Line System ingests real-time data, processes it into operational products, and delivers the products to the operational users
- The Off-Line System ingests real-time or static data, monitors the function of the On-Line System, validates the products, and performs maintenance functions

# IASI L1CT PPS – Functions

- The IASI L1CT PPS performs the following functions:
  - » Ingest
  - » Production (operational, validation, and archive products)
  - » Delivery
  - » System Maintenance
  - » Error Handling
  - » Generates Monitoring Log Files
  - » Status Messaging
  - » Resource Management
- The operation of these subsystems within the system software is shown in the two following slides.

# IASI L1CT System Interfaces/Users

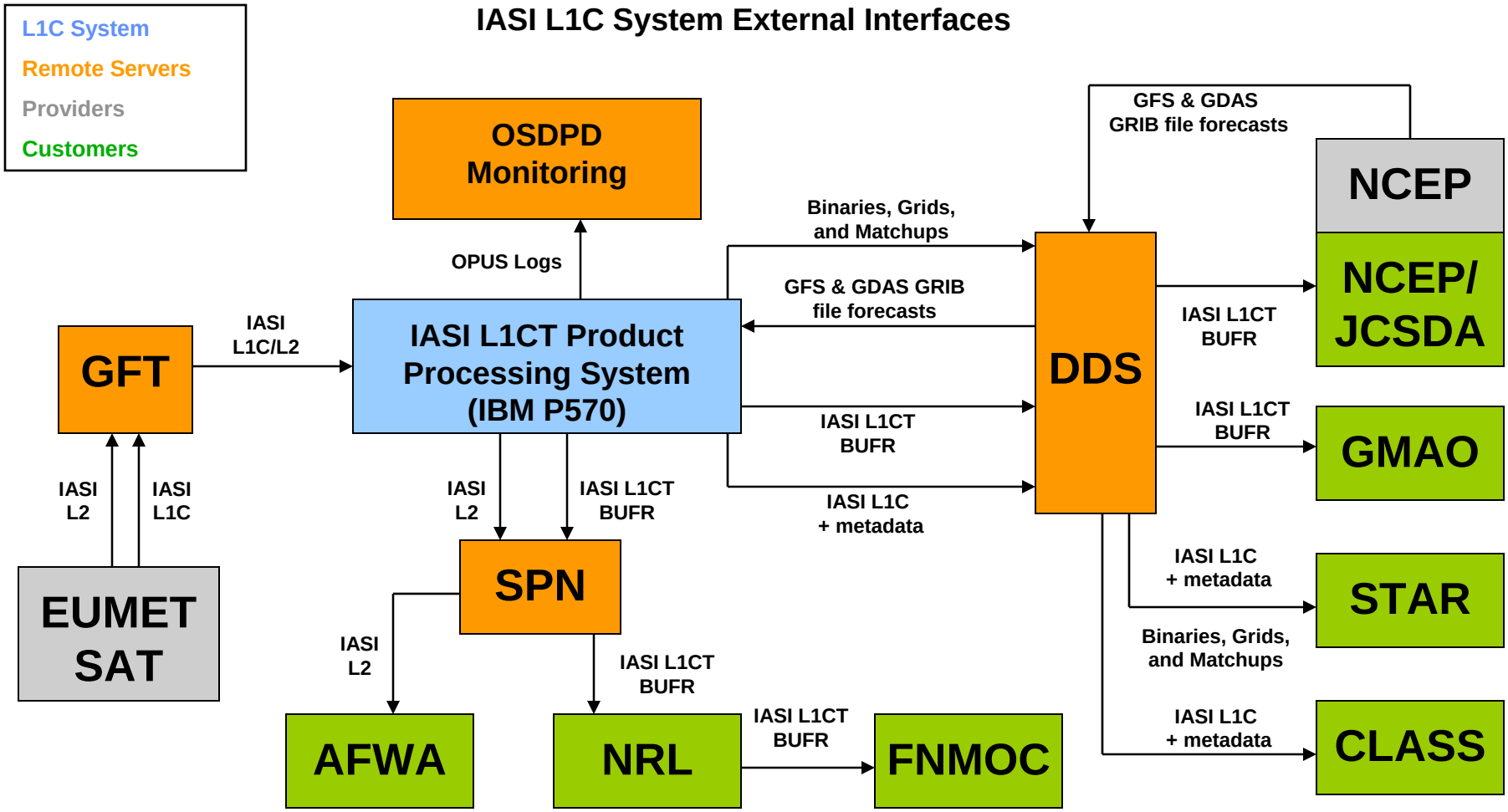

# IASI L1CT System Flow

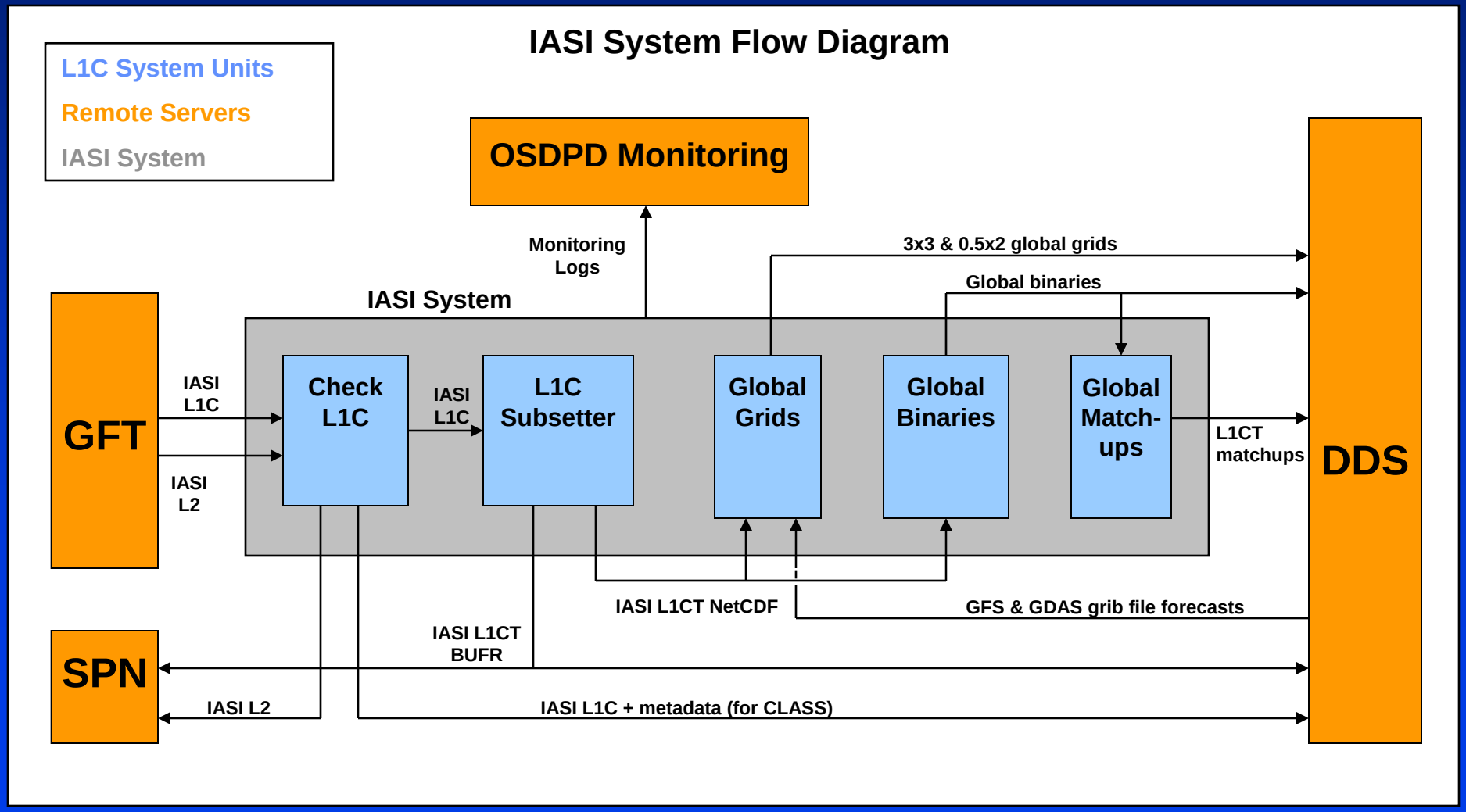

# IASI L1CT PPS – Hardware Environment

- **There are 3 IBM P570s used for development, test/backup, and operations.**
  - » 16 CPUs
  - » 2GB/CPU memory
  - » 3TB disk space
- **Each machine is currently situated in its own security zone.**
- **All 3 machines reside behind the NSOF firewall. All access must be made through the NSOF VPN.**
- **Hardware is managed by the OSDPD maintenance contract.**
- **All machines are required to have identical connectivity according to the IASI OpsTest System Requirements Document.**

  **http://www.orbit.nesdis.noaa.gov/smcd/spb/iosspdt/qadocs/IASI_OpsTest_Systems_Requirements_Document.doc**
- **The identical hardware, configuration, and external interfaces ensures that the system tested on one machine will run on another.**

# IASI L1C PPS – Hardware

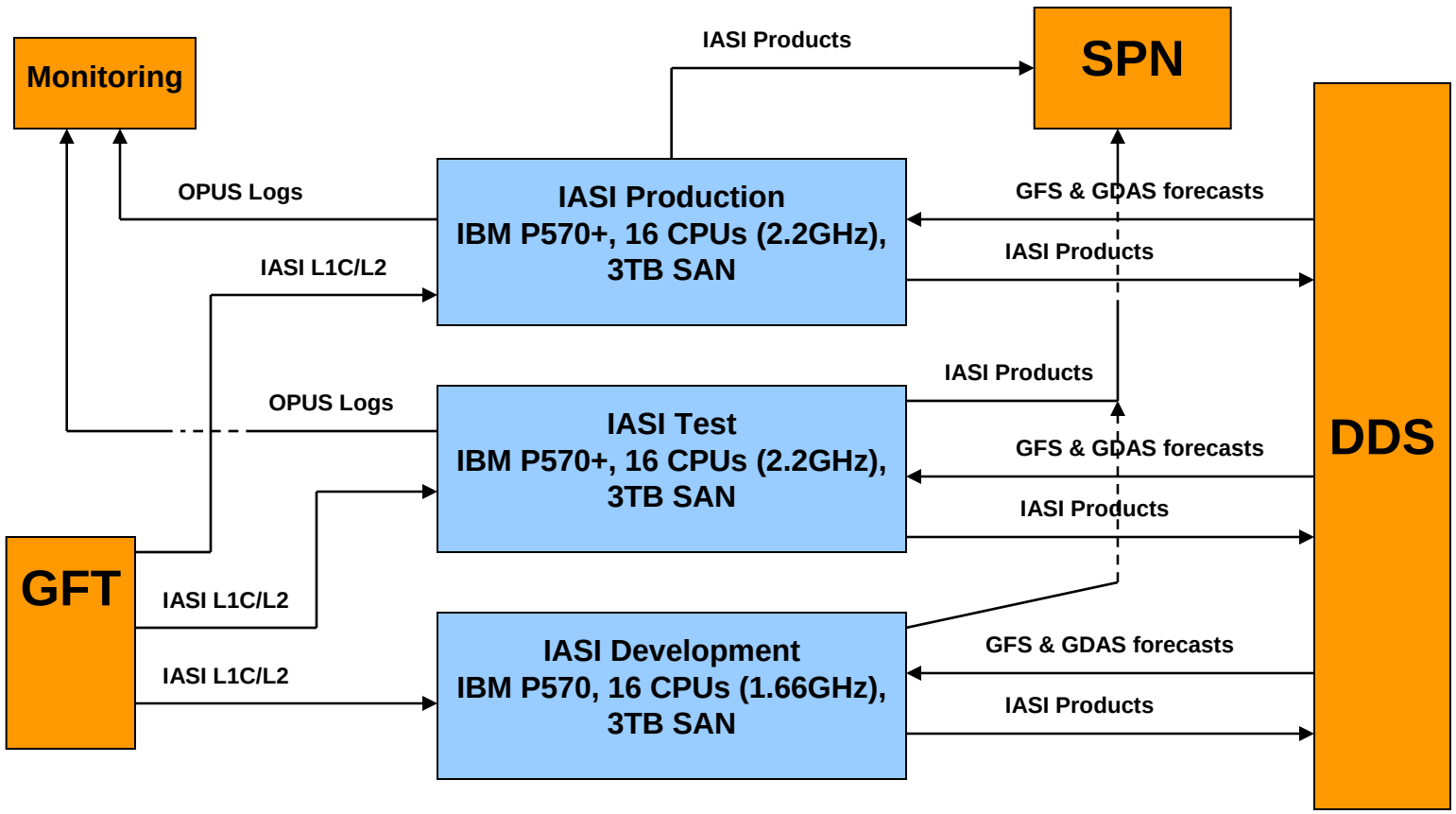

# IASI L1CT PPS – Processing

- All processing is scheduled by the crontab.
- For normal operations, there are no jobs that have to be manually run. This includes maintenance.
- Processing is controlled by Perl scripts, as listed in the following three slides

# IASI L1CT PPS Scripts (1)

| Script Name | Parent Unit | Frequency | |
|---|---|---|---|
| | | Hours | Minute |
| *Run_System_Check.pl* | System | All | Every 5 |
| *Run_Job_Status.pl* | System | 0, 6, 12, 18 | 3 after |
| *Run_Dump_Status.pl* | System | All | Every 5 |
| *Operations_Directory_Cleanup.pl* | System | 9 | 10 after |
| *Incoming_Directory_Cleanup.pl* | System | 7 | 0 after |
| *Run_Get_GFS_Forecast.pl* | Global Grids | All | 20 after |
| *Run_Get_GDAS_Forecast.pl* | Global Grids | All | 28 after |
| *Convert_GDAS_Spec_to_Rect.pl* | Global Grids | All | 35 after |
| *Run_Get_L1C_Files.pl* | Check L1C | All | Every 3 |
| *Run_Check_L1C.pl* | Check L1C | All | Every 3 |
| *Process_Status.pl* | System | All | Every 2 |

# IASI L1CT PPS Scripts (2)

| Script Name | Parent Unit | Frequency | |
|---|---|---|---|
| | | Hours | Minute |
| *Run_IASI_L1C_Subsetter.pl* | L1C Subsetter | All | Every 3 |
| *Run_Data_Delevery_Time.pl* | System | 10 | 0 after |
| *Run_IASI_Global_Grids.pl* | Global Grids | 7 | 0 after |
| *Run_IASI_Global_PC_Grids_1Band.pl* | Global Grids | 7 | 30 after |
| *Run_IASI_Global_PC_Grids_3Band.pl* | Global Grids | 7 | 50 after |
| *Run_IASI_FullGlobal_Grids.pl* | Global Grids | 1 | 15 after |
| *Run_IASI_FullGlobal_PC_Grids_1Band.pl* | Global Grids | 8 | 0 after |
| *Run_IASI_FullGlobal_PC_Grids_3Band.pl* | Global Grids | 8 | 45 after |
| *Run_IASI_GFS_Forecast_Grids.pl* | Global Grids | 11 | 0 after |
| *Run_IASI_GDAS_Forecast_Grids.pl* | Global Grids | 11 | 45 after |

# IASI L1CT PPS Scripts (3)

| Script Name | Parent Unit | Frequency | |
|---|---|---|---|
| | | Hours | Minute |
| *Run_IASI_2Scan_Global_Binaries.pl* | Global Binaries | 18 | 30 after |
| *Run_IASI_FullGlobal_Binaries.pl* | Global Binaries | 8 | 30 after |
| *Run_IASI_Global_Matchups.pl* | Global Matchups | 18 | 0 after |

# IASI L1CT PPS – Software Units

- **The IASI L1CT PPS is comprised of five software units**
  - » Check L1C
  - » L1C Subsetter
  - » Global Grids
  - » Global Binaries
  - » Global Matchups

# Check L1C Unit – Requirements Trace

- Derived Requirement 4.0
- Derived Requirement 4.2
- Derived Requirement 5.6
- Derived Requirement 6.1
- Derived Requirement 7.2
- Derived Requirement 8.0
- Derived Requirement 8.1

# Check L1C Unit Components

| Software Component | Purpose and Function | File Input | File Output |
|---|---|---|---|
| Run_Get_L1C_Files.pl | To pull the EUMETSAT IASI L1C data from the remote server (GFT). | EUMETSAT PFS IASI L1C binary granule file | EUMETSAT PFS IASI L1C binary granule file |
| Run_Check_L1C.pl | To act as a driver script for running the executable code listed below | EUMETSAT PFS IASI L1C binary granule file | EUMETSAT PFS IASI L1C binary granule file or metadata file. |
| main_iasi_header_dump | To extract the contents of the EUMETSAT IASI L1C header for generating metadata. | A EUMETSAT PFS IASI L1C binary granule file. | EUMETSAT header contents dumped to a temporary file from standard output. |
| main_iasi_level1c_info | To extract some additional metadata information from the IASI measurement data records such as bounding box for the granule. | A EUMETSAT PFS IASI L1C binary granule file. | Bounding_Box text file and a file called StartStopTimes containing the beginning and ending times of the granule (in milliseconds since 01/01/1970). |
| Create_IASI_L1C_Metadata.pl | To generate FGDC compliant IASI granule metadata in xml format for CLASS. | The Granule_Info file and the IASI granule metadata template. | An xml granule metadata file. |
| Put_L1C_Files.pl | To transfer EUMETSAT IASI L1C data and metadata files to the remote server (DDS). | EUMETSAT PFS IASI L1C binary granule file or metadata file. | EUMETSAT PFS IASI L1C binary granule file or metadata file. |

# Check L1C Unit Flow

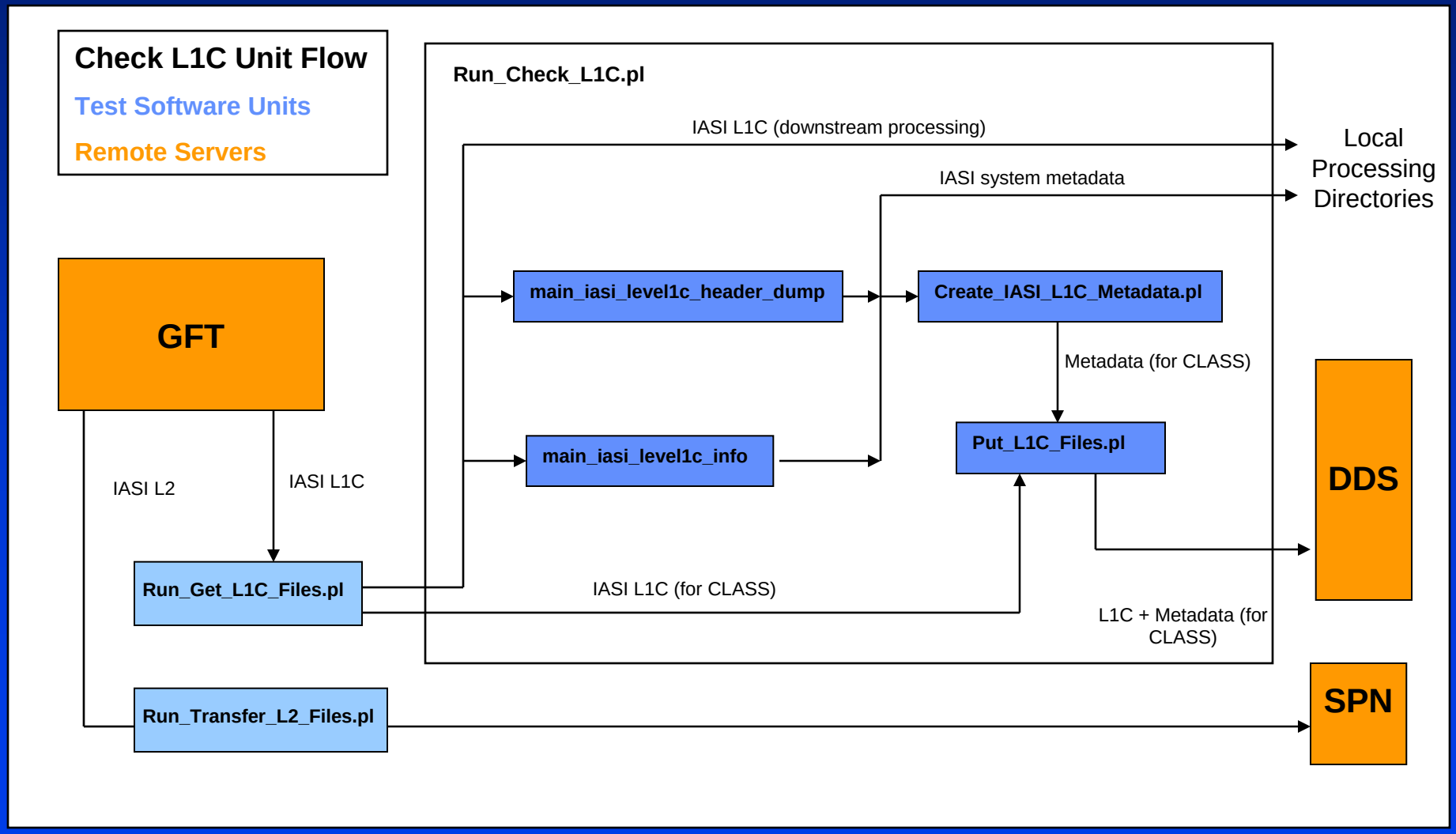

# L1C Subsetter Unit – Requirements Trace

- Basic Requirement 1.0
- Derived Requirement 1.1
- Derived Requirement 1.2
- Derived Requirement 1.3
- Derived Requirement 1.4
- Derived Requirement 1.5
- Derived Requirement 1.5.1
- Derived Requirement 1.5.3
- Derived Requirement 1.5.4
- Basic Requirement 2.0
- Derived Requirement 2.1
- Basic Requirement 3.0
- Derived Requirement 3.1
- Basic Requirement 4.0
- Derived Requirement 4.1
- Derived Requirement 5.3
- Derived Requirement 5.6
- Basic Requirement 6.0
- Derived Requirement 6.1

# L1C Subsetter Unit Components

| Software Component | Purpose and Function | File Input | File Output |
|---|---|---|---|
| IASI_L1C_Subsetter.ksh | To act as a driver script for the executable programs listed below | EUMETSAT PFS IASI L1C binary granule file, NetCDF template, (eigenvector file) | ALL IASI L1CT NetCDF and BUFR files. |
| main_iasi_level1c_subsetter | To generate spatially and spectrally subset data as well as principal components. | EUMETSAT PFS IASI L1C binary granule file, NetCDF template, (eigenvector file) | IASI L1CT NetCDF file (subset according to the scheme specified in the input CDL template). |
| main_iasi_netcdf_to_bufr | To generate IASI L1CT BUFR files from the NetCDF generated upstream by main_iasi_level1c_subsetter. | An IASI L1CT NetCDF granule file. | An IASI L1CT BUFR granule file. |
| main_iasi_bufr_to_netcdf | To generate NetCDF files from the IASI L1CT BUFR files. Provides a product check of the BUFR files to ensure readability. | An IASI L1CT BUFR granule file. | A zero byte sized marker file indicating that the file contents are good. |
| main_iasi_warmest_fov | To generate IASI L1CT NetCDF files containing the warmest FOV from full resolution IASI L1CT. | A full resolution IASI L1CT NetCDF granule file. | A thinned IASI L1CT NetCDF granule file with the warmest FOV from each FOR. |

# L1C Subsetter Unit Flow

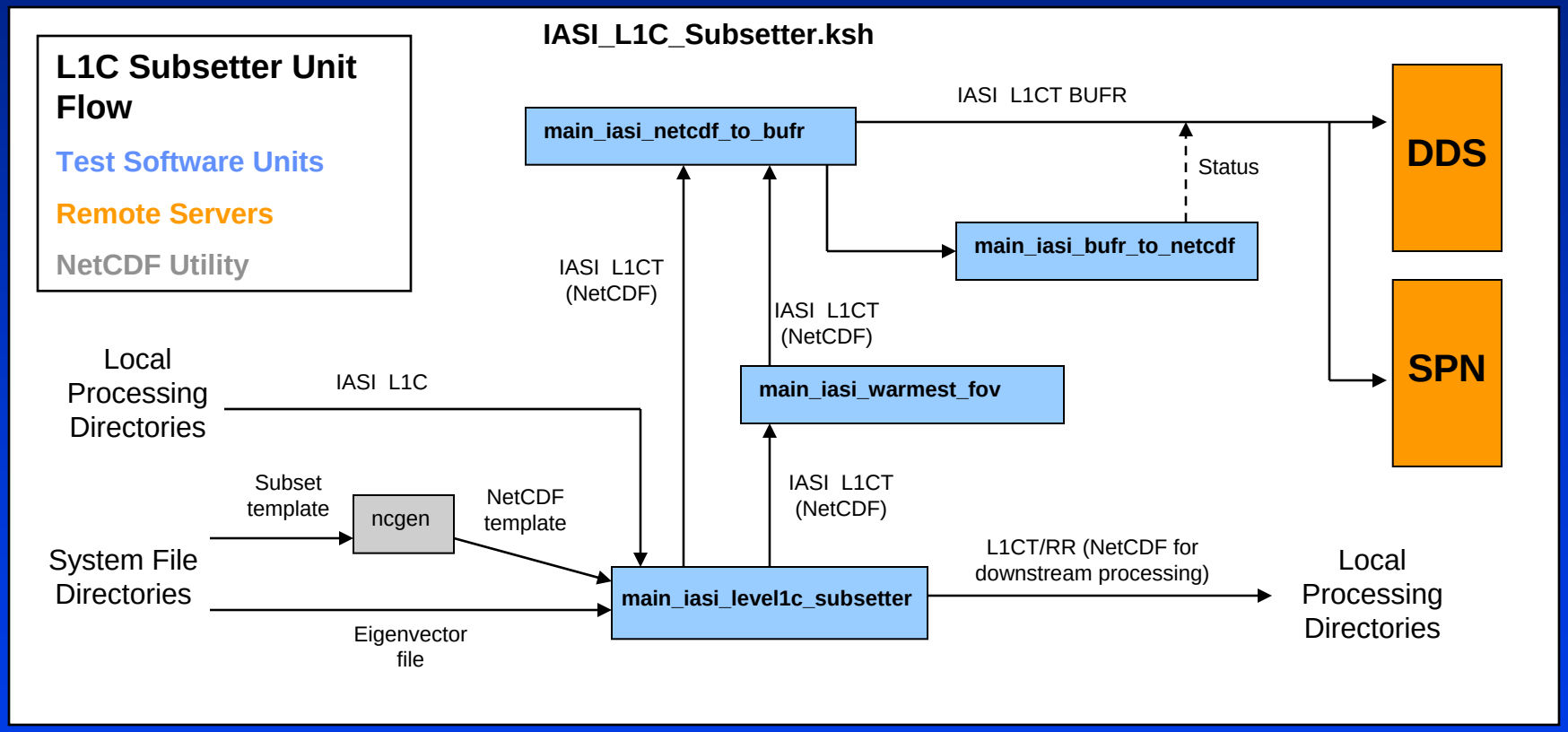

# Global Grids Unit – Requirements Trace

- Derived Requirement 1.5
- Derived Requirement 1.5.2
- Derived Requirement 1.5.6
- Derived Requirement 2.2
- Derived Requirement 4.2
- Derived Requirement 5.6
- Derived Requirement 6.1
- Derived Requirement 7.2

# Global Grids Unit Components (1)

| Software Component | Purpose and Function | File Input | File Output |
|---|---|---|---|
| Run_IASI_Global_PC_Grids_1Band.pl | To generate daily 0.5*2 global grids of thinned RR and PCS generated from 1 band. | IASI L1CT 616 channel, 1 band, 1 FOV/FOR, all FORs NetCDF files (480/day). | Ascending and descending daily gridded binary files. |
| Run_IASI_FullGlobal_PC_Grids_1Band.pl | To generate daily 3*3 global grids of full spatial resolution RR and PCS generated from 1 band. | IASI L1CT 8461 channel, 1 band, 4 FOVs/FOR, all FORs NetCDF files (480/day). | Ascending and descending daily gridded binary files. |
| Run_IASI_Global_PC_Grids_3Band.pl | To generate daily 0.5*2 global grids of thinned RR and PCS generated from 3 band. | IASI L1CT 616 channel, 3 bands, 1 FOV/FOR, all FOR NetCDF files (480/day). | Ascending and descending daily gridded binary files. |
| Run_IASI_FullGlobal_PC_Grids_3Band.pl | To generate daily 3*3 global grids of full spatial resolution RR and PCS generated from 3 band. | IASI L1CT 8461 channel, 3 bands, 4 FOVs/FOR, all FORs NetCDF files (480/day). | Ascending and descending daily gridded binary files. |

# Global Grids Unit Components (2)

| Software Component | Purpose and Function | File Input | File Output |
|---|---|---|---|
| Run_IASI_Global_Grids.pl | To generate daily 0.5*2 global grids of thinned IASI radiances. | IASI L1CT 616 channel, 1 FOV/FOR, all FORs NetCDF files (480/day). | Ascending and descending daily gridded binary files. |
| Run_IASI_FullGlobal_Grids.pl | To generate daily 3*3 global grids of the full resolution IASI radiances. | IASI L1CT 8461 channel, 4 FOVs/FOR, all FORs NetCDF files (480/day). | Ascending and descending daily gridded binary files. |
| Create_IASI_Grid_Metadata.pl | To generate FGDC compliant metadata for CLASS for the full resolution IASI 3*3 daily global grids. | The Grid_Info file and metadata template file. | An xml FGDC compliant metadata file for both ascending and descending 3*3 IASI global grids. |
| Run_IASI_GFS_Forecast_Grids.pl | To generate 0.5*2 global grids of GFS forecast data at the IASI 0.5*2 global grid locations. | IASI 0.5*2 ascending and descending global grids. | Ascending and descending daily gridded binary files of GFS data. |

# Global Grids Unit Components (3)

| Software Component | Purpose and Function | File Input | File Output |
|---|---|---|---|
| Run_IASI_GDAS_Forecast_Grids.pl | To generate 0.5*2 global grids of GDAS forecast data at the IASI 0.5*2 global grid locations. | IASI 0.5*2 ascending and descending global grids. | Ascending and descending daily gridded binary files of GDAS data. |
| Run_Get_GDAS_Forecasts.pl | To obtain GDAS forecasts from the remote server (DDS). | GDAS Forecast Files | GDAS Forecast Files |
| Run_Get_GFS_Forecasts.pl | To obtain GFS forecasts from the remote server (DDS). | GFS Forecast Files | GFS Forecast Files |

# Global Grids Unit Flow

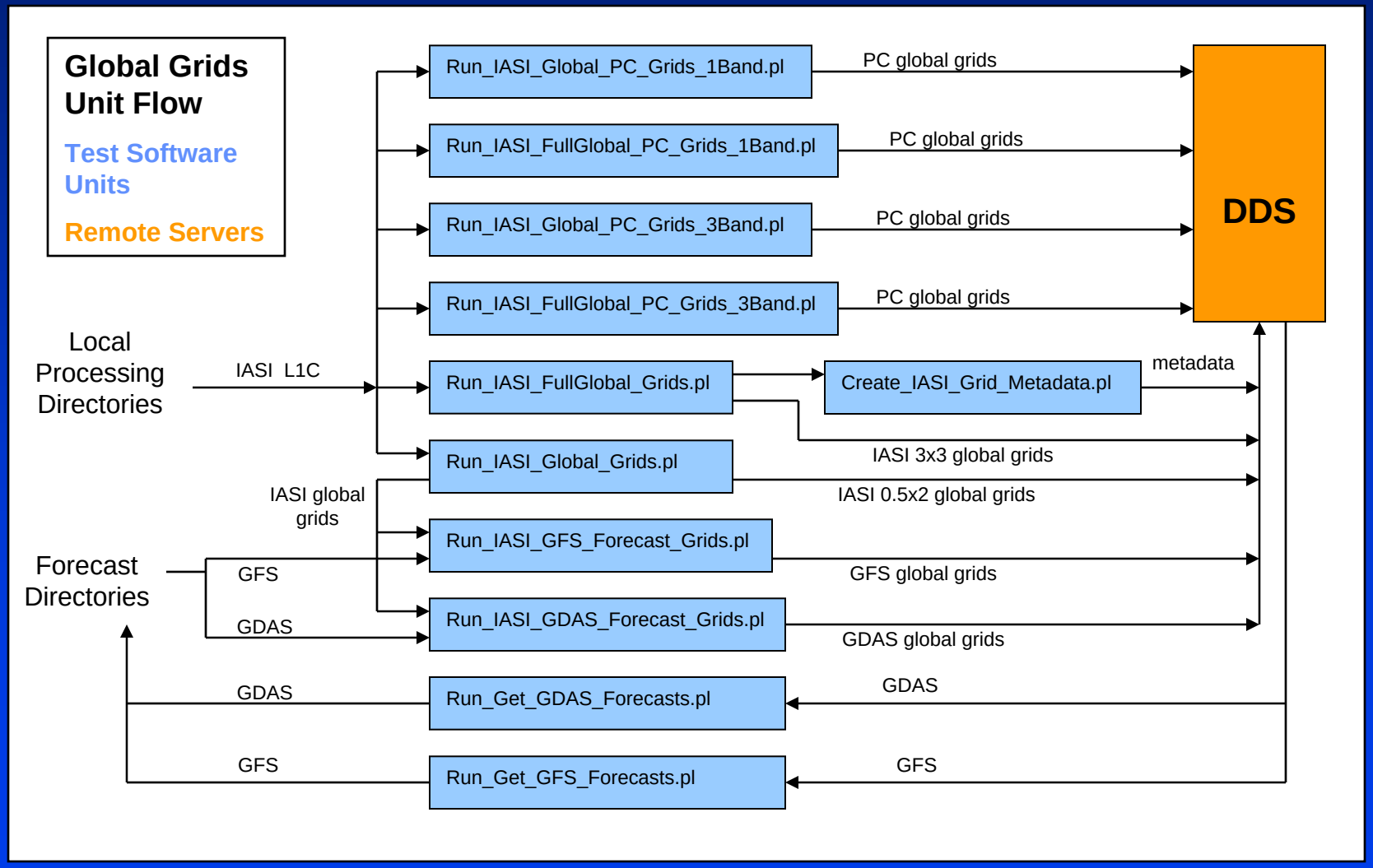

# Global Binaries Unit – Requirements Trace

- Derived Requirement 1.5
- Derived Requirement 1.5.6
- Derived Requirement 2.1.1
- Derived Requirement 2.2
- Derived Requirement 4.2
- Derived Requirement 5.6
- Derived Requirement 6.1

# Global Binaries Unit Components

| Software Component | Purpose and Function | File Input | File Output |
|---|---|---|---|
| Run_IASI_2scan_Binaries.pl | To generate binaries of global coverage for eigenvector generation. | NetCDF L1CT full resolution granule files (480/day) containing only 2 scans. | A single daily global coverage binary file. |
| Run_IASI_FullGlobal_Binaries.pl | To generate a global coverage binary file of the full resolution data and a file containing only the locations and times of the full resolution data. Both files are used together by the global matchups downstream. | NetCDF L1CT full resolution granule files (480/day). | Two single daily global coverage binary files. One file has all the data and the other has only the locations of all the data. |

# Global Binaries Unit Flow

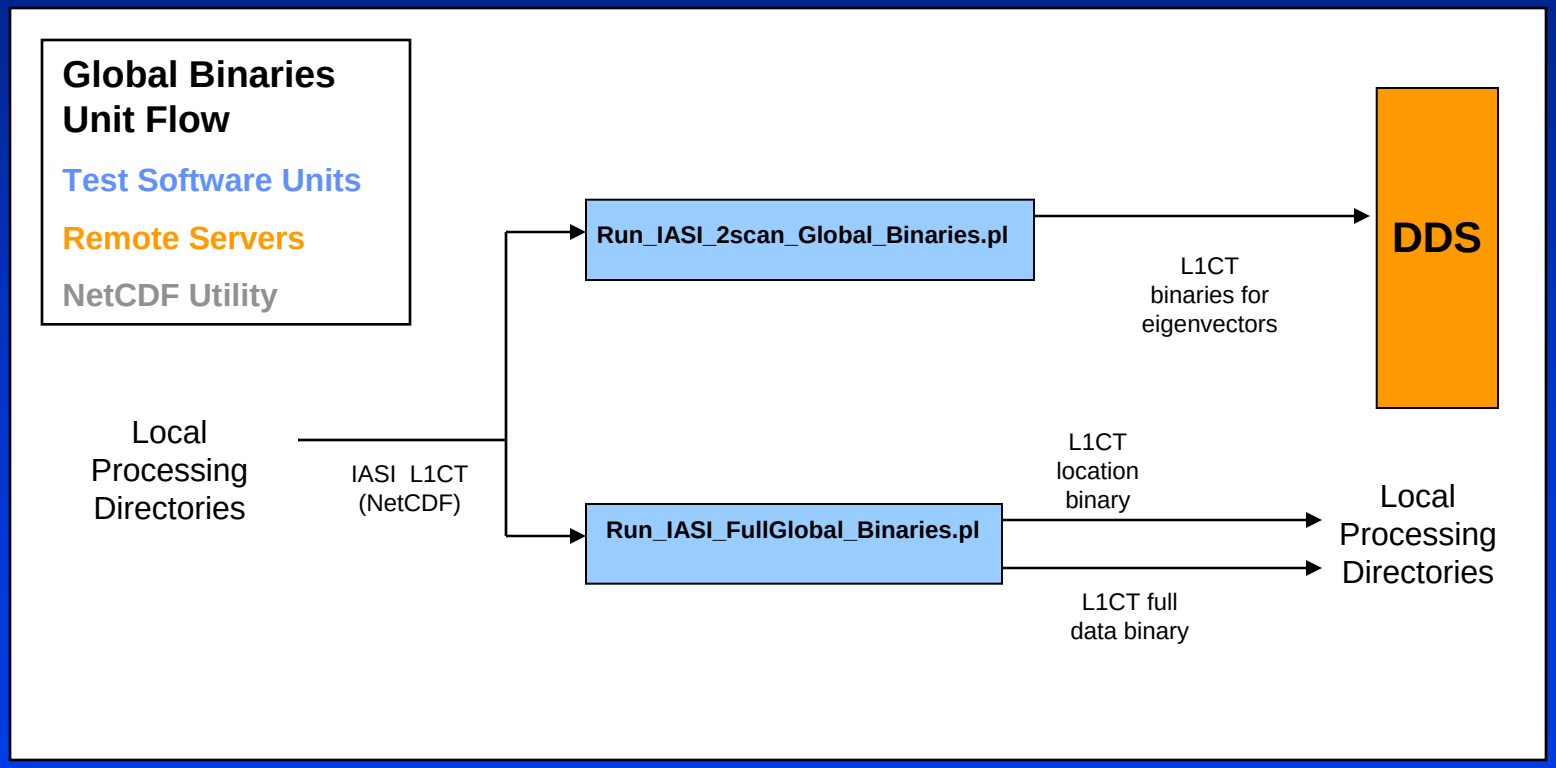

# Global Matchups Unit – Requirements Trace

- Derived Requirement 1.5
- Derived Requirement 1.5.5
- Derived Requirement 1.5.6
- Derived Requirement 2.2
- Derived Requirement 4.2
- Derived Requirement 5.6
- Derived Requirement 6.1
- Derived Requirement 7.2

# Global Matchups Unit Components

| Software Component | Purpose and Function | File Input | File Output |
|---|---|---|---|
| Run_IASI_Global_Matchups.pl | To generate files containing those observed IASI L1CT data at a set of specified instrument locations (e.g. radiosondes, aircraft, satellite measurements, etc.) | A full resolution global coverage IASI binary file and a full resolution global coverage file of only those locations. Also, a list of instrument observation locations and times to which to match the IASI data. | A binary and a NetCDF file containing the observed IASI L1CT data collocated and saved at those specified locations. |

# Global Matchups Unit Flow

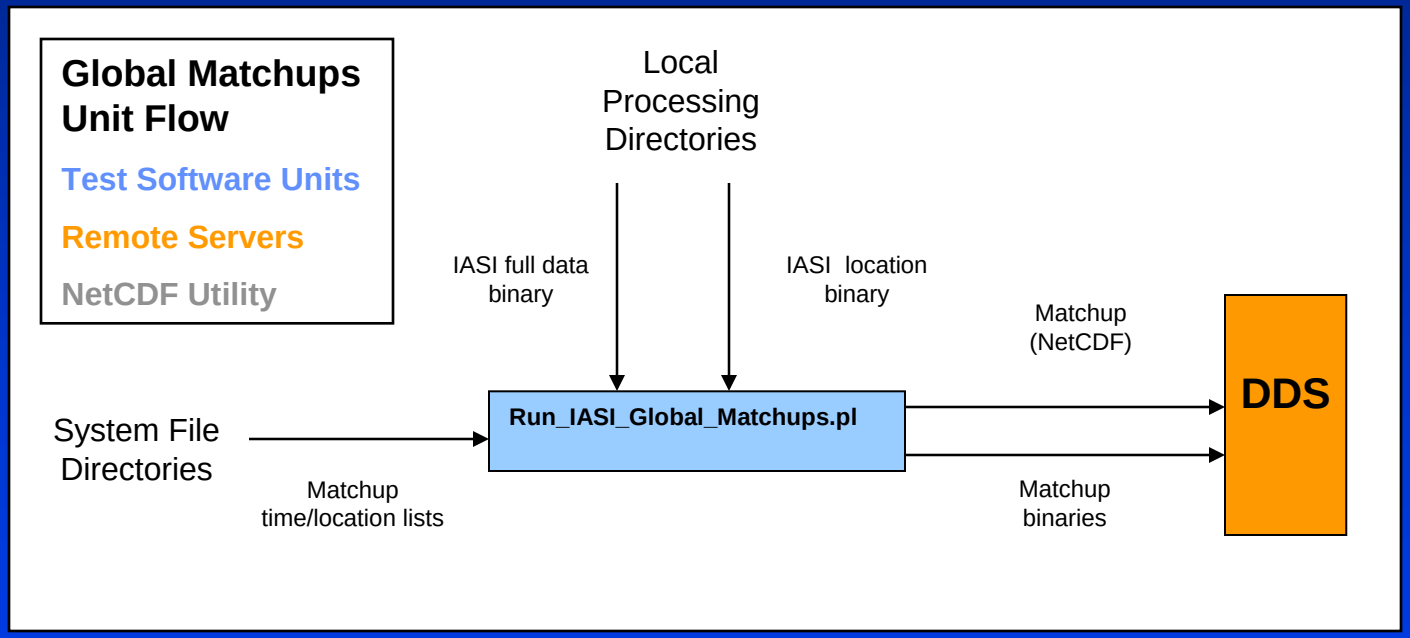

# Project Baseline Report

- The project's baseline and change history is maintained in a Project Baseline Report (PBR)
  - » The PBR includes the change history, approval status, and location of every Configuration Item in the project's baseline, including every item presented in this System Description.
  - » PBR v2r0, an SRR artifact, can be accessed at **TBS**

1. INTRODUCTION
2. TEST READINESS REVIEW REPORT
3. SYSTEM REQUIREMENTS
4. SYSTEM DESCRIPTION
5. SYSTEM READINESS
6. RISKS AND ACTIONS
7. SUMMARY AND CONCLUSIONS

# Section 5 – System Readiness

Presented by

Zhaohui Cheng and
Tom King
PSGS

# Demonstration of System Readiness

- System readiness for operations is demonstrated by verification and validation, accomplished by unit tests and a system test
- The results of unit testing and system testing, documented in the Verification and Validation Report (VVR), should provide a complete demonstration of system readiness

# Verification and Validation Report

- The VVR documents the results of testing to ensure that the requirements specified for the product processing system are satisfied by the completed system (VERIFICATION) and that the final developed system will satisfy the users' needs and expectations (VALIDATION)
- In a well-designed system, users' needs and expectations are completely captured by the requirements allocation – in that case, there is no meaningful distinction between verification and validation
- The IASI L1CT VVR is available at **TBS**
- The VVR will be referred to often in the following sections, as we report on:
  - » System Readiness for Users
  - » System Readiness for Operations and Maintenance

# System Readiness – User Needs

Presented by

Tom King
PSGS

# Product Users (1)

| User | Contact | Product Components |
|---|---|---|
| CLASS | Constantino Cremidis<br>Constantino.Cremidis@noaa.gov | •EUMETSAT PFS IASI L1C Radiance<br>•IASI granule metadata (FGDC-RSE)<br>•3.0 x 3.0 degree global grids of full resolution thinned IASI radiances |
| NCEP | John Derber<br>John.Derber@noaa.gov | IASI L1CT BUFR granule files |
| FNMOC/NRL | Yiping Wang<br>Yiping Wang@navy.mil,<br><br>Jim Vermeulen<br>james.vermeulen@navy.mil<br><br>Ben Ruston<br>Ben.ruston@navy.mil | IASI L1CT BUFR granule files |
| GMAO | Emily Hui-Chun Liu<br>Eliu@gmao.gsfc.nasa.gov | IASI L1CT BUFR granule files |

# Product Users (2)

| User | Contact | Product Components |
|---|---|---|
| JCSDA | Lars Peter Riishojgaard<br>Larsps@gmao.gsfc.nasa.gov<br><br>Yong Han<br>Yong.Han@noaa.gov | IASI L1CT BUFR granule files |
| AFWA | Daniel George<br>Daniel.George@afwa.af.mil<br>Aspoc@afwa.af.mil | EUMETSAT Level 2 data files in BUFR format |
| STAR | Chris Barnet<br>Chris.Barnet@noaa.gov<br>Changyong Cao<br>Changyong.Cao@noaa.gov<br><br>Zhaohui Cheng<br>Zhaohui.Cheng@noaa.gov<br><br>Aleksandar Jelenak<br>Aleksandar.Jelenak@noaa.gov | •IASI daily global grids radiances<br>•IASI daily global grids RR/PCs<br>•IASI daily global grids GFS radiances/forecast<br>•IASI daily global grids GDAS radiances/forecast<br>•IASI daily global binary radiance locations<br>•IASI daily radiances matchups<br>•IASI daily 2-scan thinned radiances |

# User Needs

- Products
  - » Quality, latency, formats, metadata
  - » Validation of products will be presented in detail in the next subsection of this SRD
- Delivery procedures
- Tools and training
- Support services
- Documentation

# User Needs – CLASS (1)

- CLASS needs IASI data and metadata, for the associated data products, from the IASI L1CT system made available to them via the DDS.
- CLASS wanted the IASI development team and CLASS to work together and follow the steps outlined in the *Producer-Archive Interface Methodology Abstract Standard (PAIMAS) (CCSDS, 2004)*
  - » Preliminary Phase – Identify what products should be archived.
  - » Formal Definition Phase – Creation of a CLASS Data Submission Agreement.
  - » Transfer Phase – This is a test of the actual transfer of data and metadata files to DDS and CLASS prior to operational distribution.
  - » Validation Phase – The final step is validation of the transferred files.

# User Needs – CLASS (2)

- The IASI development team contacted CLASS and began a series of meeting to start the PAIMAS process.
- The following items were identified for the archive:
  - » EUMETSAT PFS IASI L1C Radiance in EUMETSAT Binary format.
  - » IASI granule metadata (FGDC-RSE) in xml format.
  - » 3.0 x 3.0 degree global grids of full resolution thinned IASI radiances in gridded binary format.
  - » Metadata file for both ascending and descending 3 x 3 IASI global grids.
  - » Reader software for the EUMETSAT PFS IASI L1C files.

# User Needs - CLASS (3)

- A Data Submission Agreement was developed with CLASS and IASI developers: *Producer Archive Submission Agreement for IASI Products (NESDIS/STAR/CLASS, 2006)*:
  - » Format (data and metadata)
  - » Content (content and standards)
  - » Size (data and metadata)
  - » Name structure (of all archived items)
  - » Frequency of transfer
  - » Data file quality information
  - » Server and protocol of transfer (ftp pull to CLASS from DDS)
  - » Technical/management points of contact for all stakeholders

# Validation of CLASS Needs

- Metadata were generated for the archived data products.
- The content and format of these metadata were reviewed and approved for CLASS by Anna Milan at NGDC. She helped the development team determine which metadata fields would be most useful for the archive and the users.
- Transfer tests were conducted for getting the data from the IASI development machine to the DDS and to CLASS were conducted.
  - » Cathy Nichols (DDS)
  - » Sharon Munns (CLASS)
- Data and metadata files were successfully received. The transfer of these products for CLASS has been ongoing continuously since March, 2007.
- CLASS is already distributing IASI data and users have been requesting and accessing these data successfully.

# User Needs - NCEP

- NCEP requested product:
  - » IASI L1CT 616 channels for the warmest IASI FOV/FOR
  - » IASI L1CT 616 channel subset containing all 4 IASI FOVs/FOR
  - » Files in BUFR format. BUFR records to be smaller than 50 KB.
  - » Latency: no later than 36 hours.
- Delivery must be made through the ESPC/DDS.
- BUFR table, list of subset channels and their frequencies.
- Early release of data so they can begin to test their ingesting and reading software.
- IASI system must be flexible to changes in user request for subset types. Data assimilation tests have to be conducted to reveal the optimum subset product type.

# Validation of NCEP Needs (1)

- IASI development team worked with Simon Elliott at EUMETSAT and Jack Woollen at NCEP to develop the BUFR table and software to read/write the BUFR data.
- BUFR table, list of subset channels and their frequencies were delivered to Jim Jung and Dennis Keyser at NCEP in October, 2005.
- NCEP has been ingesting, reading, and processing the IASI BUFR files and has provided feedback on the content of these products
- NCEP product requirements were adjusted, based on their feedback

# Validation of NCEP Needs (2)

- The BUFR table was validated and approved by the WMO at a meeting in Dubai in January of 2006.
- Because the DDS was not ready, distribution via the DDS cannot be validated.
  - » The IASI development team has made near real time test and pre-operational BUFR files available through a temporary ftp server (nanuk – the AIRS data server).
    - – The access method is the same as DDS. NCEP has been successfully pulling these data.
  - » Arrangements were made with the DDS managers to conduct a short term test on the DDS Test server. NCEP was able to successfully pull data from this server.
  - » The data transfers met their timeliness requirements.

# User Needs – FNMOC / NRL

- FNMOC/NRL requested product:
  - » IASI L1CT 616 channel for all 4 IASI FOVs/FOR
  - » Files in BUFR format
  - » Latency: no later than 36 hours
- Delivery must be made through the DOD Shared Processing Network (SPN).
- BUFR table, list of subset channels and their frequencies.
- Early release of data so they can begin to test their ingesting and reading software.
- IASI system must be flexible to changes in user request for subset types. Data assimilation tests have to be conducted to reveal the optimum subset product type.

# Validation of FNMOC / NRL Needs (1)

- Supplied Ben Ruston at NRL and Yiping Wang at FNMOC with the following:
  - » Some Fortran BUFR reader code
  - » The BUFR library
  - » BUFR table
  - » Subset channel and frequency list
  - » A program to byte swap BUFR control records.
- The IASI development team has participated in a DOD/SPSRB sponsored Technical Interchange Meeting to help DOD users to obtain information about IASI products so they can refine their requests.

# Validation of FNMOC / NRL Needs (2)

- Because access to the SPN has not been established, the transfer cannot be validated.
  - » Establishing access to the SPN is currently being handled by A.K. Sharma and Vince Tabor.
  - » The IASI development team has made available a temporary distribution server (nanuk, the AIRS data server) so they may access the near real time test and pre-operational data.
  - » Correspondence with FNMOC and NRL has indicated that they have been able to successfully ingest, read, and process IASI L1CT data within their latency window.

# User Needs – GMAO

- GMAO requested product:
  - » IASI L1CT 616 channels for all 4 IASI FOVs/FOR
  - » Files in BUFR format
  - » Latency: no later than 36 hours
- Delivery must be made through the ESPC/DDS.
- BUFR table, list of subset channels and their frequencies.
- Early release of data so they can begin to test their ingesting and reading software.
- IASI system must be flexible to changes in user request for subset types. Data assimilation tests have to conducted to reveal the optimum subset product type.

# Validation of GMAO Needs

- Supplied Emily Hui-Chun Liu with the following:
  - » Some Fortran BUFR reader code
  - » The BUFR library
  - » BUFR table
  - » Subset channel and frequency list
- Because the DDS was not ready, distribution via the DDS cannot be validated.
  - » The IASI development team has made near real time test and pre-operational BUFR files available through a temporary ftp server (nanuk, the AIRS data server). The access method is the same as DDS. GMAO has been successfully pulling these data.
  - » Arrangements were made with the DDS managers to conduct short term test on the DDS Test server. GMAO was able to successfully pull data from this server.
  - » Correspondence with GMAO has indicated that they have been able to successfully ingest, read, and process IASI L1CT data within their latency window.

# User Needs - JCSDA

- JCSDA requested product:
  - » IASI L1CT BUFR granule files in BUFR format
  - » Latency: no later than 36 hours
- JCSDA get their data via NCEP.
- IASI system must be flexible to changes in user request for subset types. Data assimilation tests have to be conducted to reveal the optimum subset product type.

# Validation of JCSDA Needs

- JCSDA personnel conducting tests on IASI data are the same as those for NCEP (Jim Jung) and GMAO (Emily Hui-Chun Liu), but these tests are conducted under the supervision of Lars Peter Riishogaard.
- Because JCSDA ingest and process IASI data on the NCEP hardware, the validation results for NCEP apply to JCSDA.
- The IASI development team has been communicating with Lars Peter Riishogaard to provide information about the IASI instrument, L1CT processing sequence and methods, and the L1CT products themselves.

# User Needs - AFWA

- AWFA requested product:
  - » EUMETSAT Level 2 data files in BUFR format
  - » Latency not specified. We assume there is no special latency requirement that would need additional system capability.
- They must have products available to them on the DOD Shared Processing Network (SPN).
- Early release of data so they can begin to test their ingesting and reading software.

# Validation of AFWA Needs

- AFWA user needs cannot be validated at this time.
  - » IASI EUMETSAT Level 2 are not yet available from EUMETSAT
  - » A NOAA server, and a method by which these data will be transferred to this server, has not yet been identified.
  - » Access to the SPN by the IASI system has not yet been established.
  - » Therefore, ingest, processing, distribution, and timeliness cannot be validated.
- Early release of data cannot be granted since it's not yet available.
- Establishing access to the EUMETSAT Level 2 data and to the SPN is being handled by A.K. Sharma and Vince Tabor.
- The IASI development team has participated in a DOD/SPSRB sponsored Technical Interchange Meeting to help DOD users to obtain information about IASI products so they can refine their requests.

# User Needs – STAR (1)

- STAR requested product:
  - » IASI daily global grids radiances in Gridded binary format
  - » IASI daily global grids RR/PCs in Gridded binary format
  - » IASI daily global grids GFS radiances/forecast in Gridded binary format
  - » IASI daily global grids GDAS radiances/forecast in Gridded binary format
  - » IASI daily global binary radiances in binary format
  - » IASI daily global binary radiances location (input for matchups) in binary format
  - » IASI daily radiances matchups (radiosondes) in binary and NETCDF format
  - » IASI daily 2-scan binary thinned radiances in binary format
  - » Latency: 1 day delay

# User Needs – STAR (2)

- Pre-operational data must be made available for validation products so validation methods can be developed and refined.
- Data products must be available from the DDS server to the STAR collaborative environment.
- Requested list of data fields to the validation team.
- Implement updates to eigenvector coefficient files in the IASI system.

# Validation of STAR Needs (1)

- Confirmation that the requested products for validation are correctly generated by the IASI system:
  - » IASI daily global grids radiances in Gridded binary format
  - » IASI daily global grids RR/PCs in Gridded binary format
  - » IASI daily global grids GFS forecast in Gridded binary format
  - » IASI daily global grids GDAS forecast in Gridded binary format
  - » IASI daily global binary radiances in binary format
  - » IASI daily global binary radiances location (input for matchups) in binary format
  - » IASI daily radiances matchups (radiosondes) in binary and NETCDF format
  - » IASI daily 2-scan binary thinned radiances in binary format
  - » Latency: 1 day delay
- Validation of these product needs will be presented in the next subsection of this SRD.

# Validation of STAR Needs (2)

- The validation team has made requests for additional fields in the products and the development team has been responsive to their requests by adding the new fields.
- Eigenvector file updates have been made successfully in the development system. A method of easily updating these files has been established in the production system.
- Because the DDS is not ready, distribution via the DDS cannot be validated.
  - » The IASI development team has made near real time test and pre-operational validation product files available through a temporary ftp server (nanuk, the AIRS data server). The access method is the same as DDS (ftp).
  - » STAR has been successfully pulling these data since they were first available.
  - » Regular contact with the STAR validation team has indicated that they have been able to ingest, read, and process these products.

# Validation of User Needs - Tools and Training

- For training purpose, IASI development team gives the product earlier to the users and allow them look at the product. The reader for each product is also available.
  - » This training procedure was described for each user in the previous slides
  - » Each customer has communicated satisfaction with the application of this procedure
- SRR disposition of Exit Criteria # 11
  - » “The delivery procedures, tools, training, support services, and documentation available to the users are satisfactory.”

# Validation of User Needs - Documentation

- Users Manual (UM) is to be reviewed by the IASI L1CT System Readiness Review (SRR) team

- SRR disposition of Exit Criteria # 11
  - » "The delivery procedures, tools, training, support services, and documentation available to the users are satisfactory."

# Documentation Needs – The Users Manual

- The Users Manual (UM) is the primary source to satisfy the users' documentation needs.
- The UM provides the identified users with the information needed to acquire and use the product
  - » The product includes all project artifacts (documentation, code, test data and reports) that are intended for product testers and end users.
- The UM provides a product overview with sufficient detail so that the user understands how this product came to be created.
- The UM provides a product description with sufficient detail so that the user understands how to locate and use the product files and to evaluate the product quality.
- The IASI L1CT UM is available to authorized users at http://www.orbit.nesdis.noaa.gov/smcd/spb/iosspdt/qadocs/IASI_UM_1.0.doc

# System Readiness – Products

Presented by

Tom King and Zhaohui Cheng
PSGS

# Validation of Products – EUMETSAT PFS IASI L1C Radiance

- EUMETSAT IASI PFS L1C data are pulled from the GFT using Get_L1C_Files.pl. These transfers have been conducted successfully in system and unit tests. Pulls generated no errors and pulled files could be successfully processed by downstream units and users.
- EUMETSAT IASI PFS L1C files are pushed to the DDS for retrieval by CLASS using *Put_L1C_Files.pl*.
- After the files are sent to the *push* directory, they are visible in the *pull* directory after the transfer has successfully occurred.
- Unit tests verified that files sent to the DDS were transferred successfully by pulling them back to the IASI development machine and compared with the original (using the binary comparison *cmp* function).
- System tests indicate successful transfers as well. The development team has worked with Cathy Nichols at the DDS and Sharon Munns at CLASS to verify that transfers (IASI machine to DDS to CLASS) were successful.

# Validation of Products – Granule and Grid Metadata (1)

- Developed Metadata template files using USGS *tkme* tool and checked with their *mp* tool.
- Worked with Anna Milan at NGDC to determine which metadata fields would be most useful to the NCDC/CLASS archive. She has reviewed and approved all IASI L1C metadata content.
- Wrote scripts to read data files and use the templates to build dynamic metadata files.
- Conducted unit tests on metadata scripts to verify that files were built correctly.
- Unit test results, documented in the VVR, demonstrate that the metadata generation is correct

# Validation of Products – Granule and Grid Metadata (2)

- System tests demonstrated that EUMETSAT IASI L1C PFS files could be ingested, metadata could be generated, and both data and metadata files could be successfully distributed to CLASS.
- System test results, documented in the IASI L1CT VVR, demonstrate the successful addition of metadata and distribution to CLASS.
- CLASS has been receiving EUMETSAT IASI L1C PFS data and metadata files since March, 2007.
- The generation, but not the transfer of IASI L1CT 3X3 grid and metadata files cannot be validated because the DDS is not ready to receive these files.

# Validation of Products – IASI L1CT BUFR Granule Files

- Unit tests demonstrate that the EUMETSAT L1C files were read, subset, and converted to BUFR format by the L1C Subsetter unit.
- Dumps of the NetCDF files that were generated from the BUFR files indicated that:
  - » All IASI FOVs in the file were completely filled with data (file was completely read)
  - » Content of the output NetCDF files matched that of the input NetCDF files.
- System tests demonstrate that EUMETSAT files could be ingested in near real time, subset, converted to BUFR, and distributed in a timely manner.
- Users have  been able to successfully retrieve, ingest, read, and process these files from the IASI system to their servers and data processing hardware.

# Validation of Products – EUMETSAT Level 2 Data Files

- The acquisition and transfer of this product cannot be tested or validated at this time because the acquisition and distribution servers have not been identified and established.
- EUMETSAT Level 2 data is not available now. IASI development team cannot validate this product.
- The validation will be deferred to when EUMETSAT Level 2 data are in operations.

# Validation of Products – Global Grids Data Files (1)

- Unit tests to demonstrate that all the user requested global grids files could be generated and transferred to a server for retrieval by the IASI validation team. The following methods were used to demonstrate success of the unit test results.
- *Observed Radiances Test* :
  - » Open control file of the IASI radiance (IAGG file or IAFGG file)
  - » Plot the global radiances for any interested channel. Browse the plot, the brightness temperature should be in the reasonable range.
- *Reconstructed Radiances (RRs) Test* :
  - » Open control file of the IASI radiance (IAGG file)
  - » Open control file of the reconstructed radiances (IA1PC or IA3PC files)
  - » Plot the difference between the real and reconstructed radiances. Differences should be small globally.

# Validation of Products – Global Grids Data Files (2)

- *Reconstruction Scores Test* :
  - » Open the control file of the reconstructed radiances (IA1PC or IA3PC files)
  - » Generate the global plot the Reconstruction Scores. Typically these values should be below 1.7 for a successful reconstruction.
- *RMS Test* :
  - » Compute the RMS between the real and reconstructed radiances, output the RMS and noise for each channel.
  - » Plot the RMS vs. noise by using IDL.
- *Forecast data (GFS or GDAS Grids):*
  - » Generate coverage plots of gridded forecast data fields by using GrADS.
  - » Look at the map and check if the values are reasonable for all levels.

# Validation of Products – Global Grids Data Files (3)

- Retrieval of all global grids data files through the DDS could not be validated since it is not yet ready for validation products.
  - » **A temporary server was used to test distribution (nanuk, the AIRS data server).**
- **System tests reveal that the EUMETSAT IASI PFS L1C data can be ingested, read, subset, and written into NetCDF in a near real time manner. The system can generate daily gridded products and distributed them successfully.**

# Validation of Products – Global Grids Data Files (4)

- IASI development team had developed a data visualization system to monitor the IASI global grids data online.
- The customers/users can use the following URL to browse the validation results of global grids data.

http://www.orbit.nesdis.noaa.gov/smcd/spb/iosspdt/iosspdt.php

- Examples are shown in the next five slides

# Global Grids Data – Observed Radiances

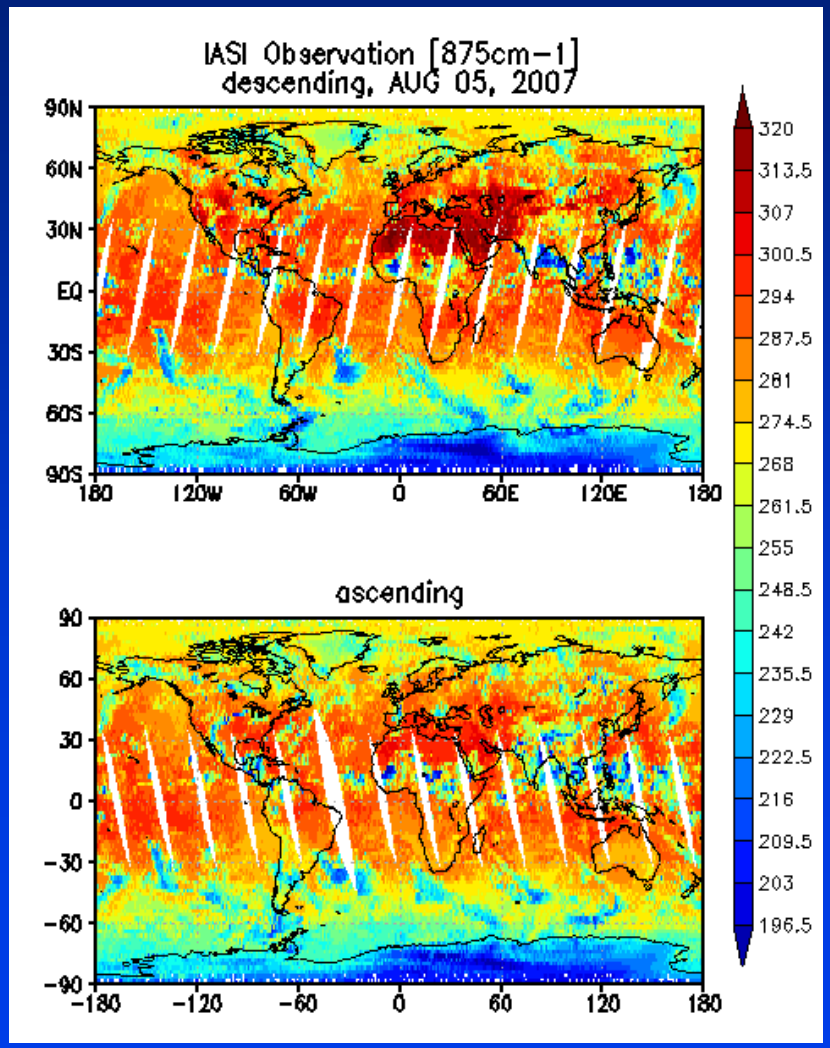


- The plot is the IASI observations at the window channel. We can see some surface and cloud characteristics from this plot.
- The IASI observed brightness temperature (BT) range is reasonable. The IASI observations basically reflect the global climate characteristics.
- The spatial patterns of BT match the land mask which demonstrates the geolocation of IASI data is correct

# Global Grids Data - Reconstructed Radiances

## Reconstructed BT

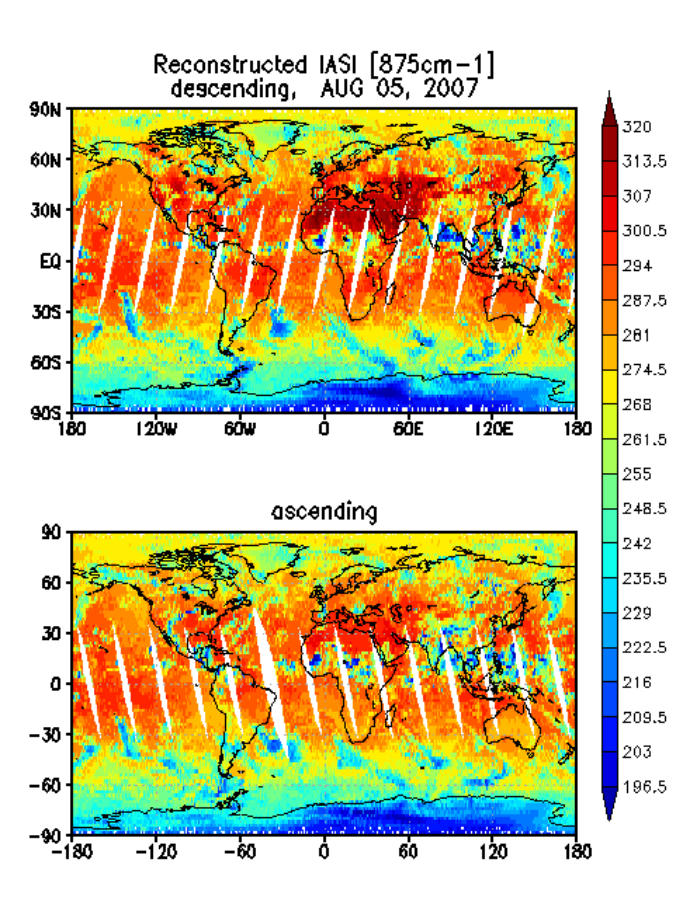


## (OBS – REC) BT

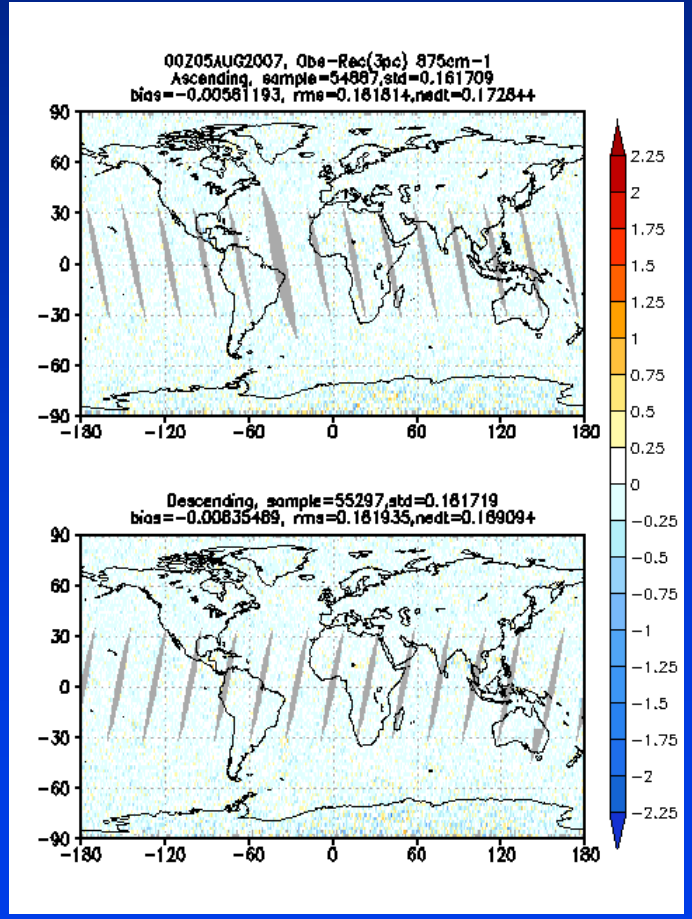


- Comparing with the observed BT, the reconstructed BT shows the same pattern
- The value of the difference between observed and reconstructed BT is small globally, the RMS is only 0.18K

# Global Grids Data - Reconstruction Scores

- ***Reconstruction Scores Test***

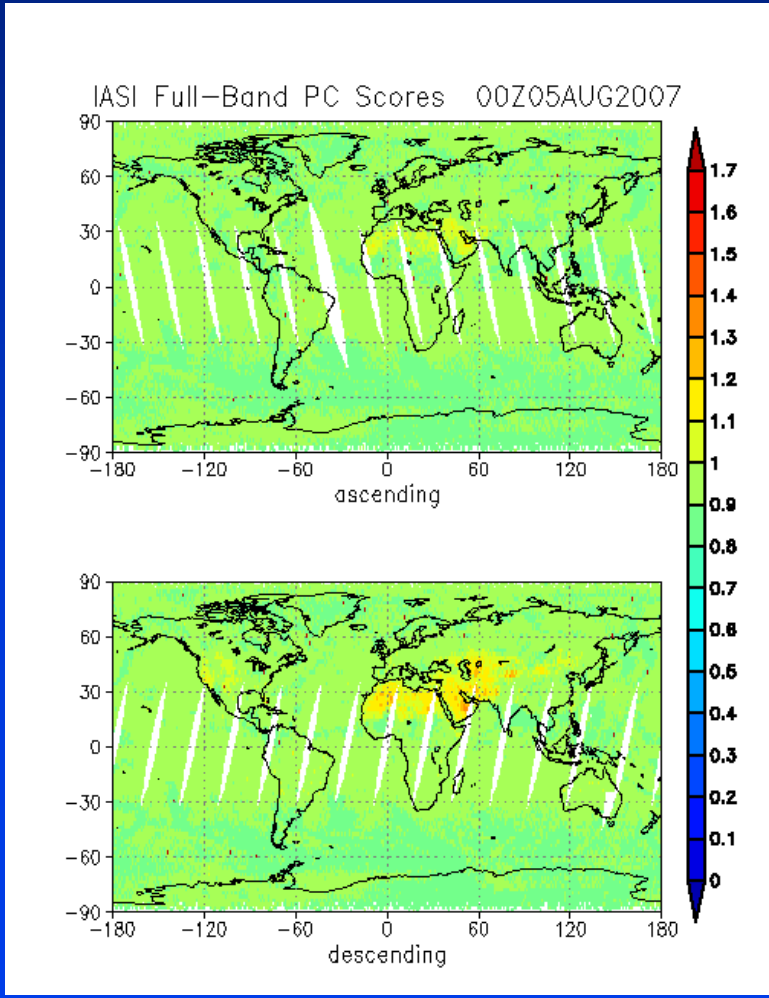


- The plot shows the global reconstruction scores for full-band.

- The values are less than 1.7 which demonstrates the reconstruction is successful

# Global Grids Data – RMS

- ***RMS Test Example***

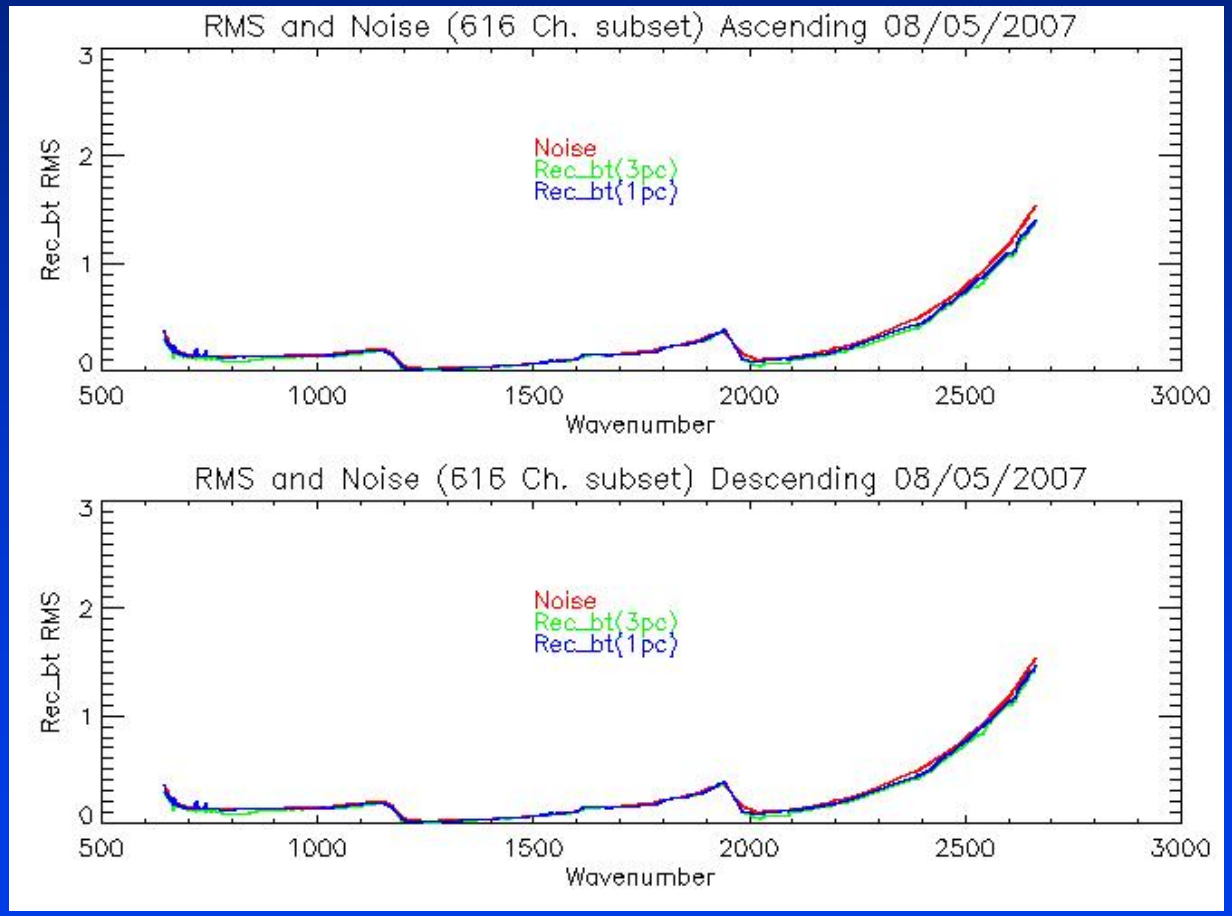


- The plot compares the reconstructed RMS (blue line) with Noise (red line).
- The RMS should be under the noise level. Large reconstructed error can be used to identify the suspicious data.
- The plot shows this test is successful.

# Global Grids Data – GFS and GDAS Forecasts

## Temperature

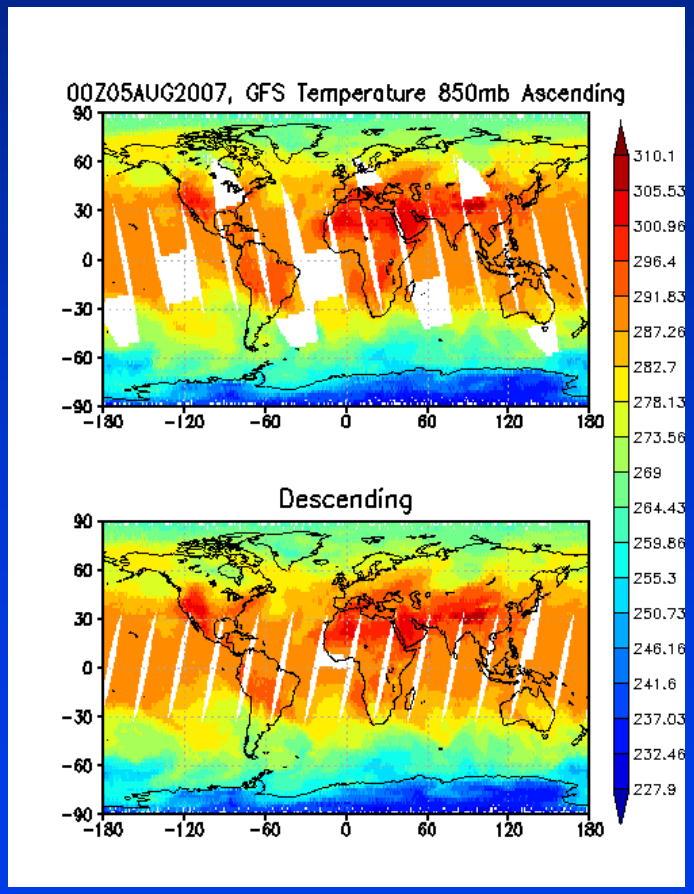


## Water Vapor

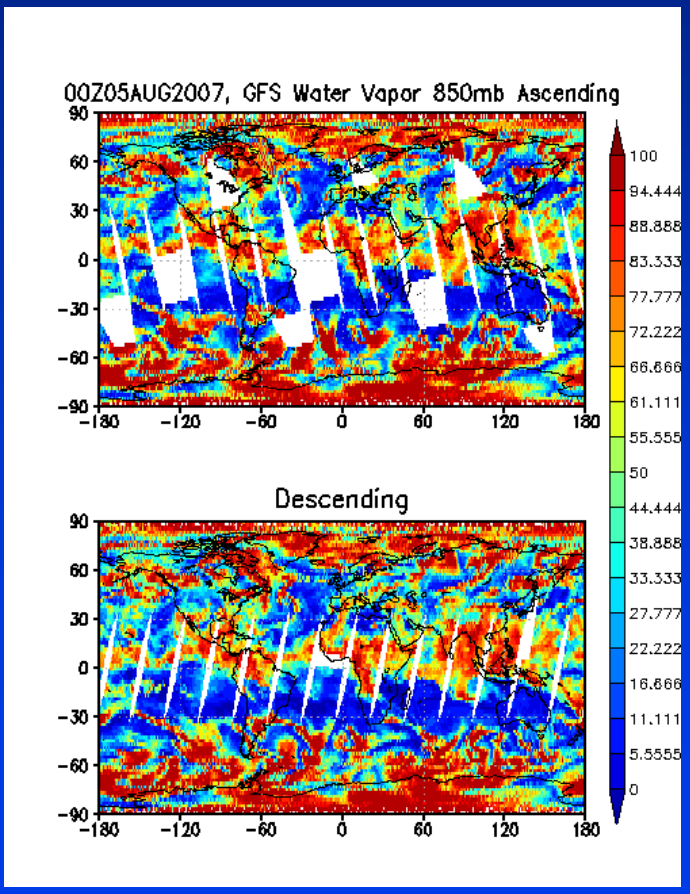


- GFS Forecast Temperature and Water Vapor at 850mb from data file output of the Global Grids unit test
- Manual inspection of these maps demonstrates that they are a reasonable, expected unit output

# Validation of Products – Global 2-scan Binary Files (1)

- Unit tests verified that the 2-scan global binary files were properly generated by plotting out the global coverage of the globally gridded reconstructed radiances and principal components
  - These files are derived from the eigenvector files which are, in turn, generated from the 2-scan binary.

# Validation of Products – Global 2-scan Binary Files (2)

- System tests, documented in the VVR, demonstrated that EUMETSAT IASI L1C PFS files could be ingested, read, processed, and converted into NetCDF in near real time. The system can then generate the 2-scan binary one day later and distribute the file to the server.
- In addition, the validation team could retrieve them from the server, read the files, and successfully generate the eigenvector coefficient files.

# Validation Results – Global 2-scan Binary Data

**Eigenvector #1 ~ #5 generated by using IASI global 2-scan binary data on April 29, 2007**

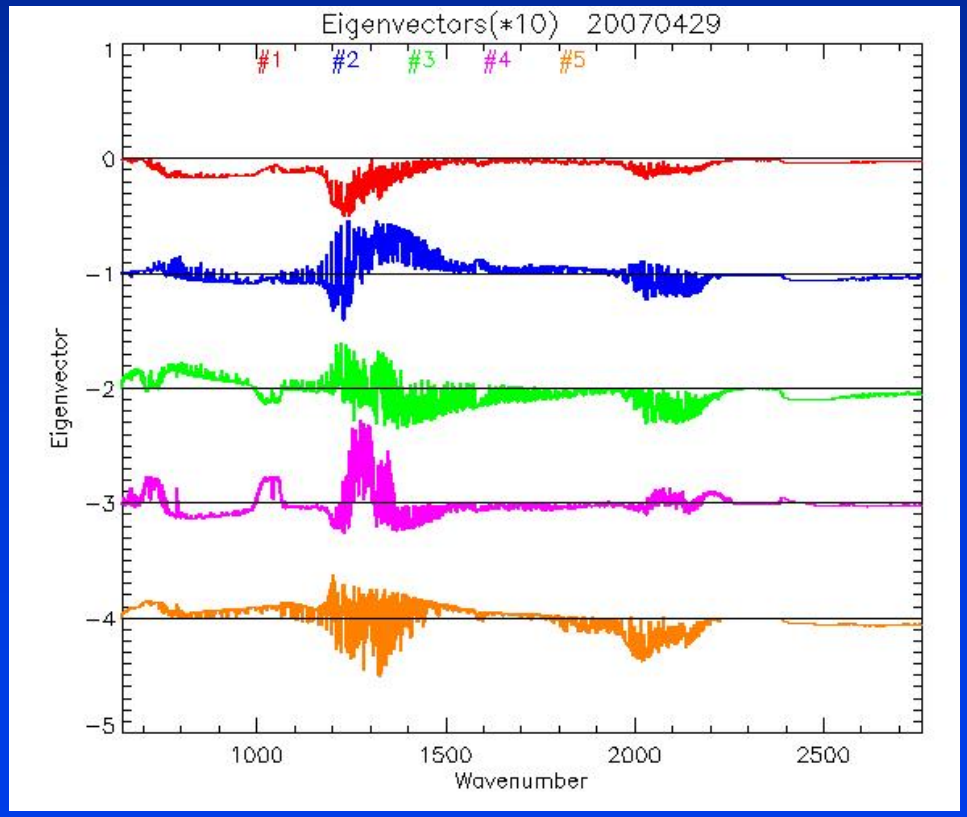


- Successfully read and process the global 2-scan binary data to generate the eigenvector files demonstrates the good data quality.

# Validation of Products – Global Matchup Files

- Unit test validation consisted of spot checks to data records dumped to the screen.
- System test validation consisted of:
  - » Check that Global binaries output from the global binaries unit were ingested into the matchup unit
  - » Check that the matchups processing ran and generated the required output files.
  - » Check that the output files were distributed to a distribution server.
  - » Confirm that the customer has received the file and indicated satisfaction with the product.

# Unit Test Results – Global Matchup Files

- Unit test results, documented in the IASI L1CT VVR, indicate that the unit performed successfully.
  - » Dumps of the matchup records contain the IASI satellite observation lat/lon and time matched to the radiosonde lat/lon and time.
  - » They also contain the actual distance of the satellite observation to the radiosonde observation.
  - » These times and distances were within the assigned tolerances (3 hours, 100km).
  - » No errors were generated in the output logs.
  - » These result indicate that the matchups were successfully generated.

# System Test Results – Global Matchup Files

- System test results, documented in the IASI L1CT VVR, demonstrated that:
  - » Global binaries output from the global binaries unit were ingested into the matchup unit
  - » The matchups processing ran and generated the required output files.
  - » The output files were distributed to a distribution server.
  - » The customer has received the file and indicated satisfaction with the product.

# System Readiness – Readiness for Operations and Maintenance

Presented by
Tom King
PSGS

# IASI Level 1 Products – Operations

- The IASI system will run in the NOAA operations at OSDPD.
- Tianxu Yu and Deyong Xu are the OSDPD operations technical support staff. They will install, operate, provide system monitoring, and support this system during the production phase.
- OSDPD operators will monitor the product generation status using the OPUS monitoring tool.
- The IASI development team will provide all updates to system code, system files, and new products. These updates will be delivered with never versions of the IASI system.
- The IASI development team will provide the necessary system documentation, training and support. Updates to this documentation will be provided with each new system delivery.
- The IASI development team will work with the OSDPD operations technical support staff to test new versions of the system in operations.

# Operator Needs (1)

- The operations team need an IASI L1CT product generation and distribution system.
- Technical operations staff needs include:
  - » Procedures for installation and startup
  - » Procedures for normal operations
  - » Procedures for special operations
  - » Maintenance procedures
  - » Monitoring and diagnostic procedures
  - » Interpretation of error messages
  - » Security procedures
  - » Tools and training for operations and maintenance
  - » Delivery and notification procedures
  - » System control procedures
  - » Documentation

# Operator Needs (2)

- **SPSRB set of required system and operations documentation**
  - » Operations Manual
  - » System Description Document
  - » Metadata Document
  - » Interface Control Document
  - » System Maintenance Manual
  - » Users Manual

# Operator Needs (3)

- Operations and Maintenance training and support
- They need to receive log files for their monitoring system (OPUS or other)
- All the IASI system code must be able to run on operational target platform (IBM P570, AIX 5.3)
- Operational code must be stable and robust such that it can handle errors in the data stream and exit gracefully.

# Validation of Operator Needs – Documentation

- SPSRB documents to be reviewed by the IASI L1CT System Readiness Review (SRR) team
  - » Operations Manual
  - » System Description Document
  - » Metadata Document
  - » Interface Control Document
  - » System Maintenance Manual
- SRR review team to review these documents and dispose of Exit Criteria # 6 - 10

# Validation of Operator Needs – Document Access

- All of these documents are available from the online IASI L1CT project artifact repository at:
- IASI L1CT Operations Manual:
  http://www.orbit.nesdis.noaa.gov/smcd/spb/iosspdt/qadocs/IASI_OM_1.0.doc
- IASI L1CT System Maintenance Manual:
  http://www.orbit.nesdis.noaa.gov/smcd/spb/iosspdt/qadocs/IASI_SMM_1.0.doc
- IASI L1CT System Description Document:
  http://www.orbit.nesdis.noaa.gov/smcd/spb/iosspdt/qadocs/IASI_SDD_1.0.doc
- IASI L1CT Metadata Document:
  http://www.orbit.nesdis.noaa.gov/smcd/spb/iosspdt/qadocs/IASI_MDD_1.0.doc
- IASI L1CT Interface Control Document:
  http://www.orbit.nesdis.noaa.gov/smcd/spb/iosspdt/qadocs/IASI_ICD_1.0.doc

# Validation of Operator Needs – Operations Manual

- The Operations Manual (OM) is the primary source to satisfy operations documentation needs.
- The OM provides the operators with the information needed to operate the product processing system
  - How and when to schedule and initiate job runs
  - Hardware and software requirements for product processing
  - Input, output, and intermediate file specifications
  - Installation procedures
  - Run procedures (passive and interactive)
  - Error handling
  - Monitoring, diagnosis, and recovery procedures
  - Security procedures
  - Product distribution procedures
  - Backup procedures
  - System shutdown and startup procedures
  - Training procedures

# Validation of Operator Needs – System Maintenance Manual

- The System Maintenance Manual (SMM) is the primary source to satisfy maintenance documentation needs.
- The SMM provides maintenance programmers with the information needed to understand the programs, the operating environment and maintenance procedures
  - » Overview of the product processing system and operating environment
  - » Hardware configuration, including primary and backup machines
  - » Hardware problems under stressing conditions
  - » Operating system description and possible problems
  - » Program languages; available manuals and training documents
  - » File distribution protocols and software packages that are used for primary and backup transfer of input and output files.
  - » Installation and build procedures
  - » Procedures for QA, reactive maintenance, and science maintenance

# Validation of Operator Needs – System Description Document

- The System Description Document (SDD) complements the Operations Manual and System Maintenance Manual
- The SDD describes the key components of the product processing system at a level of detail necessary to effectively perform system administrative and reactive maintenance functions
  - » Description of system hardware
  - » Description of program units
  - » Description of system interfaces (external and internal)
  - » Operational scenario (job scheduling and execution)
  - » Resource requirements
  - » Maintenance, monitoring and troubleshooting procedures

# Validation of Operator Needs – Interface Control Document

- The Interface Control Document (ICD) is a critical reference document for the operational maintenance of the product processing system
- The ICD provides a description of each input, intermediate and output data set at a level of detail sufficient for maintenance personnel to locate it and identify processing errors associated with it.
  - » Purpose and function
  - » File name and description
  - » Data format/type, range of values, and special error values
  - » Access
  - » Agreements with data providers and data users

# Validation of Operator Needs – Metadata Document

- The Metadata Document (MDD) complements the System Description Document and Interface Control Document
- The MDD provides a description of the FGDC-compliant metadata generated by the product processing system
  - » The system components that generate metadata and how they operate.
  - » The metadata files, where they are, and their format.
  - » Distribution methods, where the data are transferred, and who the users are.
  - » How the metadata were conceived and validated.

# Validation of Operator Needs – Training and Support

- Review and reading the SPSRB documents
- Attendance and participation in the project review process:
  - » PDR
  - » CDR
  - » TRR (review of UTP)
  - » SRR (review of VVR)
- Hands-on installation and operation of a delivered processing system. Users can read the documentation while having complete access to the system in the test environment. The development team will provide all assistance necessary.
- Working with the development team to install and operate the system.

# Validation of Operator Needs – Monitoring Log Files

- The system is currently generating monitoring log files for OPUS.
- A machine to which these files are to be transferred has been very recently (August 24, 2007) identified (Balmy).
- Tests have not yet been conducted to demonstrate the transfer of log files to this machine so the file transfer and content have not yet been validated.
  - » Validation will be simple and straightforward once we have connectivity to Balmy and a file transfer protocol has been established (see Risk # 36)

# Validation of Operator Needs - Code

- The operational target platform (IBM P570, 16 CPUs, 2GB/CPU, 3TB SAN, running AIX 5.3)
- The pre-operational code on the IASI development machine (iasidev1) has been run extensively with real EUMETSAT input data.
  - » Excellent simulation of the normal expected range of operating conditions
  - » The development machine is identical with respect to hardware and configuration (system and external).
  - » **System output is pushed to a test server with greater capability than the current DDS – See Risk # 35**
- Check the error handling of operational codes in the event of an error that arise due to problems with the file or a limitation of the code (see next 2 slides).

# Validation of Operator Needs – Error Handling (1)

- System tests were conducted to check error handling capabilities using corrupted and actual data near real time data flows (good and bad).
- Corrupted EUMETSAT IASI L1C PFS files were made by:
  - » Manually removing or adding randomly selected characters from the ASCII headers. These contain pointer information to the data records.
  - » Randomly typing extra characters into the binary data records of the files.
- The corrupted files were dropped into the staging directory where the system then tried to process them.
  - » Corruptions to the data records were easily caught by the read statements or the range checks if they were successfully read.
  - » Corruptions to the headers caused problems because the readers obtain information about how much memory to allocate when reading a given file.
  - » A number of header checks were added as well as limits check for the number of expected data records.
  - » Subsequent tests caught the corruptions.
  - » All errors with reading and subsetting files are directed from the low-level processing to the high-level scripts such that these errors can be directed to emails and to the OPUS logs.

# Validation of Operator Needs – Error Handling (2)

- A number of errors and unexpected results have been caught in the actual data flows. The appropriate corrections have been made for:
  - » Larger than the number of expect scan lines have been seen in files. These have been successfully rejected by the system.
  - » File transfer failures to and from the external servers. Changed all transfer scripts to Perl from Ksh so error handling checks could be installed after every ftp command.
  - » Errors while binning the granules into the system data processing tree have been corrected because of drifting granule coverage time windows. This occurs because some granules are smaller than usual.
  - » Error have occurred because of defunct processes exceeded that allowed by the user. Seen during a system stress test. This was fixed by having Perl scripts harvest all dead child processes after forking a new job.
  - » Damaged to system files (CPU status) has occurred because jobs were killed prematurely or because the file was corrupted when the machine exceeded the number of allowable forked jobs. Easily fixed by adding in maintenance scripts that kill and release hung jobs and by having the system check the size, health, and existence of critical system files.
  - » The return status of all system calls are checked.

1. INTRODUCTION
2. TEST READINESS REVIEW REPORT
3. SYSTEM REQUIREMENTS
4. SYSTEM DESCRIPTION
5. SYSTEM READINESS
6. RISKS AND ACTIONS
7. SUMMARY AND CONCLUSIONS

# Section 6 –
# Risks and Actions

Presented by

Zhaohui Cheng
PSGS

# IASI L1CT – Risks Closed By TRRR (1)

- **Risk # 1 - The project plan does not take into account all customer needs and expectations**
  - » **Status: Closed.** The TRD confirms that the project objectives are in line with customer needs and expectations. If international customer requirements come in later, they will be addressed as O&M (SPSRB process)
- **Risk # 16 - Possible problems with IASI hardware and the machine's operating system**
  - » **Status: Closed.** This is a PGD-level responsibility. The risk has been transferred to OSDPD.

# IASI L1CT – Risks Closed By TRRR (2)

- **Risk # 19 - No Data Submission Agreement (DSA) for the EUMETSAT Level 2 IASI data**
  - » **Status: Closed.** CLASS is not archiving the Level 2 IASI data.
- **Risk # 22 - Possibility that both the production and backup machines are not available**
  - » **Status: Closed.** This is an OSD responsibility.
- **Risk # 24 - Excessive user requests for data**
  - » **Status: Closed.** Data distribution policy is required, but this must be done at the PGD level. No IASI actions.
- **Risk # 26 - Possibility that system security is compromised**
  - » **Status: Closed.** PGD level responsibility. No IASI actions.

# IASI L1CT – Risks Closed By TRRR (3)

- **Risk # 27 - Possibility of data denial**
  - » **Status: Closed.** PGD level responsibility. No IASI actions.
- **Risk # 28 - Potential lack of access to IASI products on the DDS by the IASI validation and verification team**
  - » **Status: Closed.** PGD level responsibility. No IASI actions.
- **Risk # 29 - Changes to the operational system are not adequately controlled**
  - » **Status: Closed.** This is a PGD-level responsibility. The risk has been transferred to OSDPD.
- **Risk # 30 - IASI data distribution through the Shared Processing Network (SPN) is not established**
  - » **Status: Closed.** PGD level responsibility. No IASI actions.

# IASI L1CT Risks at SRR

- There are 25 remaining IASI L1CT risks to be reviewed at the SRR, including 4 new risks
- The following slides contain, for each risk item:
  - » A risk statement
  - » Risk assessment (Severity and Likelihood)
  - » Risk mitigation recommendation
  - » Status of actions identified to mitigate the risk

# Risks from the TRR Report – Risk # 2

- **RISK # 2 - The project requirements do not take into account all customer needs and expectations**
- **TRR Assessment: MEDIUM (Severity = MEDIUM, Likelihood = LOW)**
- **Risk Mitigation:**
  - » Revise the Requirements Allocation Document (RAD), based on FNMOC and AFWA needs and expectations – **ACTIONS CDR 12.6**
  - » Review and approve the project requirements allocation and the RAD at the TRR **– ACTION TRR 1.7.6.5**
- **Status:** Action CDR 12.6 has been completed. Risk can be closed upon SRR approval of RAD v1r1

# Completed Actions – CDR 12.6

- ACTION: CDR 12.6 - Contact FNMOC to determine the types of IASI data that may interest their center.
- CLOSURE CRITERIA: Data requirements from FNMOC are developed and documented.
- STATUS: **Completed.** IASI Development Team reports that FNMOC has been contacted and they have been added to the users list. NRL will get the IASI data from FNMOC. Points of contact have been identified in RAD v1r1. Basic requirements for FNMOC and AFWA have been documented in RAD v1r1.

# Open Actions – TRR 1.7.6.5

- ACTION: TRR 1.7.6.5 - Review and approve the project requirements allocation and the RAD at the SRR.
- CLOSURE CRITERIA: Confirmation that the project requirements, as documented in RAD v1r1 and presented at the SRR, are derived from customer needs and expectations
- STATUS: **Open.** To be disposed of by the SRR reviewers at the SRR.

# Risks from the TRR Report – Risk # 3

- **RISK # 3 - Project stakeholders are not identified or involved in the project plan and its implementation**
- **TRR Assessment: LOW (Severity = LOW, Likelihood = LOW)**
- **Risk Mitigation:**
  - » Conduct regular meetings between the IASI Development Team and IASI Operations personnel **– ACTION TRR 1.3.3.1**
- **Status:** Risk is being reduced through implementation of ACTION TRR 1.3.3.1.

# Open Actions – TRR 1.3.3.1

- ACTION: TRR 1.3.3.1 - Conduct regular meetings between the IASI Development Team and IASI Operations personnel
- CLOSURE CRITERIA: Operational technical contacts meet regularly with the IASI Development team until transition to operations has been completed.
- STATUS: **Open.** Regular meetings are being held, and will continue after SRR.

# Risks from the TRR Report – Risk # 4

- **RISK # 4 - The algorithm is not able to meet the project requirements**
- **TRR Assessment: MEDIUM (Severity = HIGH, Likelihood = LOW)**
- **Risk Mitigation:**
  - » **Document the algorithm theoretical basis, ideally in an Algorithm Theoretical Basis Document (ATBD), alternatively in a Verification and Validation Report (VVR). – ACTION CDR 1.7.9.1**
  - » **Review and approve the algorithm theoretical basis at the System Readiness Review (SRR) – ACTION 1.7.9.2**
- **Status: ACTION CDR 1.7.9.1 is completed. Risk can be closed upon SRR approval of the algorithm descriptions in the VVR and UM.**

# Completed Actions – CDR 1.7.9.1

- ACTION: CDR 1.7.9.1 - Document the algorithm theoretical basis
- CLOSURE CRITERIA:
  - » A Verification and Validation Report (VVR) and Users Manual (UM) that document the algorithm theoretical basis is in the project baseline.
  - » All documents referenced in the VVR and UM are in the project baseline.
- STATUS: Completed.

# Open Actions – CDR 1.7.9.2

- ACTION: CDR 1.7.9.2 - Review and approve the algorithm theoretical basis at the System Readiness Review (SRR).
- CLOSURE CRITERIA:
  - » SRR approval of the algorithm theoretical basis as documented in the VVR and UM
- STATUS: Open. To be disposed of by the SRR reviewers at the SRR.

# Risks from the TRR Report – Risk # 5

- **RISK # 5 - The external interfaces in the design are not available or sufficient to meet project requirements**
- **CDR Assessment: HIGH (Severity = HIGH, Likelihood = MEDIUM)**
- **Risk Mitigation:**
  - » **Write an Interface Control Document (ICD) for the IASI L1CT project, following STAR EPL standards – ACTION CDR 1.7.13.1**
  - » **In the ICD, document or refer to all agreements with external suppliers and users of data**
  - » **At the SRR, confirm that the ICD describes all external input and output datasets at the detailed design level, including details on data format/type, range of values and special error values – ACTION CDR 1.7.13.2**
  - » **Address external interfaces risks and actions at SRR – ACTION CDR 1.7.13.3**
- **Status: ACTIONs CDR 1.7.13.1 and CDR 12.1 are completed. Risk can be closed upon SRR approval of the ICD**

# Completed Actions – CDR 1.7.13.1

- ACTION: CDR 1.7.13.1 - Write an Interface Control Document (ICD) for the IASI L1CT project, following STAR EPL standards.
- CLOSURE CRITERIA:
  - » An ICD that describes all external input and output datasets at the detailed design level, including details on data format/type, range of values and special error values is in the project baseline
  - » The ICD documents or refers to all agreements with data suppliers and data users
- STATUS: Completed.

# Completed Actions – CDR 12.1

- ACTION: CDR 12.1 - Finalize the IASI Level 1C archive process.
- CLOSURE CRITERIA: Agreement on whether IASI data will be sent to CLASS in granules or orbits and from which system it will be sent is reached and documented.
- STATUS: **Completed.** The resulting document, "Producer-Archive Submission Agreement for IASI Products"; document number NOAA-CLASS/OSD-2006-0030R0. " can be found in the project artifact repository at **http://www.orbit.nesdis.noaa.gov/smcd/spb/iosspdt/qadocs/1135_Producer_Archive_Submission_Agreement_for_IASI_Products.doc**

# Completed Actions – TRR 1.7.7.3

- ACTION: TRR 1.7.7.3 - Make clear how the Level 2 processing can be turned off (c.f. slide 42 of the TRD).
- CLOSURE PLAN:
  - » Remove from the delivery the scripts that run the L2 units
- STATUS: **Completed.**

# Open Actions – CDR 1.7.13.2

- ACTION: CDR 1.7.13.2 - Confirm that the ICD describes all external input and output datasets at the detailed design level
- CLOSURE CRITERIA:
  - » SRR approval of the ICD.
- STATUS: Open. To be disposed of by the SRR reviewers at the SRR.

# Open Actions – CDR 1.7.13.3

- ACTION: CDR 1.7.13.3 - Address external interfaces risks and actions at the SRR
- CLOSURE CRITERIA:
  - » SRR disposition of external interfaces risks and actions
- STATUS: Open. To be disposed of by the SRR reviewers at the SRR.

# Risks from the TRR Report – Risk # 6

- **RISK # 6 - Project metadata do not meet customer requirements**
- **CDR Assessment: MEDIUM (Severity = HIGH, Likelihood = LOW)**
- **Risk Mitigation:**
  - » Produce a Metadata Document (MDD) that describes project metadata that will meet customer requirements – ACTION CDR 1.7.17.1
  - » In the MDD and the SRD, describe the Federal Geographic Data Committee (FGDC) metadata for each archived product and demonstrate how the FGDC metadata design meets the requirements for FGDC metadata.
  - » At the SRR, confirm that the MDD describes metadata for each archived product and demonstrates how the FGDC metadata design meets the requirements for FGDC metadata – ACTION CDR 1.7.17.2
  - » Review metadata risks and actions at SRR – ACTION CDR 1.7.17.3
- **Status: MDD has been placed in the project artifact repository for review at SRR. Risk can be closed upon SRR approval of the MDD.**

# Completed Actions – CDR 1.7.17.1

- ACTION: CDR 1.7.17.1 - Produce an IASI L1CT Metadata Document (MDD) for review at SRR, following STAR EPL standards
- CLOSURE CRITERIA:
  - » An MDD that describes the Federal Geographic Data Committee (FGDC) metadata for each archived product and demonstrates how the FGDC metadata design meets the requirements for FGDC metadata is in the project baseline
- STATUS: **Completed.**

# Open Actions – CDR 1.7.17.2

- ACTION: CDR 1.7.17.2 - Confirm that the MDD describes the Federal Geographic Data Committee (FGDC) metadata for each archived product and demonstrates how the FGDC metadata design meets the requirements for FGDC metadata
- CLOSURE CRITERIA:
  - » SRR approval of the MDD
- STATUS: Open. To be disposed of by the SRR reviewers at the SRR.

# Open Actions – CDR 1.7.17.3

- ACTION: CDR 1.7.17.3 - Address metadata risks and actions at the SRR
- CLOSURE CRITERIA:
  - » Metadata risks and actions are presented in the SRD
  - » SRR disposition of metadata risks and actions
- STATUS: **Open.** To be disposed of by the SRR reviewers at the SRR.

# Risks from the TRR Report – Risk # 7

- **RISK # 7 - The design documentation is insufficient to ensure that the code will make products that meet project requirements**
- **TRR Assessment: MEDIUM (Severity = HIGH, Likelihood = LOW)**
- **Risk Mitigation:**
  - » **Produce a System Description Document (SDD) that fully defines the structure and capabilities of the software product components down to the Sub-Unit Level – ACTION CDR 1.7.19.1**
  - » **Describe the design documentation in the TRD and the SRD.**
  - » **Review and approve the SDD at the SRR – ACTION CDR 1.7.19.2**
- **Status: SDD has been placed in the project artifact repository for review at SRR. Risk can be closed upon SRR approval of the SDD.**

# Completed Actions – CDR 1.7.19.1

- **ACTION: TRR 3.1.1.1 - Produce a System Description Document (SDD) for review at the SRR**
- CLOSURE PLAN:
  - » Write an SDD, following STAR EPL standards.
  - » In the SDD, fully define the structure and capabilities of the software product components at the Unit Level and the Sub-Unit level
  - » In the SDD, fully describe all Look-Up Tables, parameter files, system control files, input/intermediate/output data files, and ancillary data files in the algorithm design
  - » In the SDD, list and describe all software elements of the product processing system
- STATUS: **Completed.**

# Open Actions – CDR 1.7.19.2

- **ACTION: CDR 1.7.19.2 - Review and approve the system description at the SRR**
- CLOSURE PLAN:
  - » In the System Readiness Document (SRD), describe the SDD and provide a pointer to the SDD.
  - » Distribute the SDD and SRD to the SRR reviewers
  - » Confirm that the SDD fully defines the structure and capabilities of the software product components at the Unit Level and the Sub-Unit level
  - » Confirm that the SDD fully describes all Look-Up Tables, parameter files, system control files, input/intermediate/output data files, and ancillary data files in the algorithm design
  - » Confirm that the SDD lists and describes all software elements of the product processing system
- STATUS: **Open.** To be disposed of by the SRR reviewers at the SRR.

# Risks from the TRR Report – Risk # 8

- **RISK # 8 - Requirements are not completely allocated to system components and product components**
- **TRR Assessment: MEDIUM (Severity = HIGH, Likelihood = LOW)**
- **Risk Mitigation:**
  - » **In the Requirements Allocation Document (RAD), provide an allocation of all requirements to system components and product components – ACTIONS TRR 1.7.6.1, TRR 1.7.6.2, TRR 1.7.6.3, TRR 1.7.6.4 and TRR 4.4.1.2**
  - » **At the SRR, confirm that the RAD contains the correct allocation of the requirements to system components and product components – ACTION TRR 1.7.6.5**
- **Status: Risk has been reduced by upgrade to RAD v1.1**

# Completed Actions – TRR 1.7.6.1

- ACTION: TRR 1.7.6.1 - Add test environment requirements to the RAD.
- CLOSURE CRITERIA: Confirmation that test environment requirements are sufficiently documented in RAD v1r1.
- STATUS: Completed.

# Completed Actions – TRR 1.7.6.2

- ACTION: TRR 1.7.6.2 - Add resource requirements, for each sub system layer, to the RAD.
- CLOSURE CRITERIA: Confirmation that resource requirements for each sub system layer are sufficiently documented in RAD v1r1.
- STATUS: **Completed.** New derived requirements 5.5.1 and 5.5.2 added to the RAD (see Section 3 of this SRD).

# Completed Actions – TRR 1.7.6.3

- ACTION: TRR 1.7.6.3 - Allocate requirement 1.4 to main_iasi_level1c_subsetter.cpp
- CLOSURE CRITERIA: Confirmation that RAD v1r1 allocates requirement 1.4 to main_iasi_level1c_subsetter.cpp
- STATUS: Completed. RAD v1r1 includes this allocation.

# Withdrawn Actions – TRR 1.7.6.4

- ACTION: TRR 1.7.6.4 - Add to the RAD a derived requirement that reprocessed granule files are processed by Check_L1C and overwrite the old file.
- CLOSURE CRITERIA: Confirmation that RAD v1r1 includes a derived requirement that reprocessed granule files are processed by Check_L1C and overwrite the old file.
- STATUS: Withdrawn.

# Open Actions – TRR 4.4.1.2

- ACTION: TRR 4.4.1.2 - Make the RAD, UTP and TRD consistent and correct. Make filenames in UTP, RAD and TRD consistent with PBR.
- CLOSURE CRITERIA:
  - » Confirmation that the RAD, UTP and TRD consistent and correct
  - » Confirmation that filenames in the UTP, RAD and TRD are consistent with the PBR
- STATUS: **Open.** To be completed after SRR but before SPSRB briefing.

# Open Actions – TRR 4.9.1.4

- ACTION: TRR 4.9.1.4 - Document allocation of requirements 2.0, 2.1, 2.2, 4.2 and 5.6 consistently in the RAD, UTP, and TRD.
- CLOSURE CRITERIA:
  - » Confirmation that the RAD, UTP, and TRD consistently document allocation of requirements 2.0, 2.1, 2.2, 4.2 and 5.6
- STATUS: Open. To be completed after SRR but before SPSRB briefing

# Open Actions – TRR 1.7.6.5

- **ACTION: TRR 1.7.6.5 - Review and approve the project requirements allocation and the RAD at the SRR.**
- CLOSURE PLAN:
  - » Distribute the Requirements Allocation Document (RAD v1r1) to the SRR reviewers
  - » Confirm that the RAD satisfactorily documents the project requirements, based on customer needs and expectations
  - » Confirm that the requirements are satisfactorily allocated to system components and product components.
- STATUS: **Open**. To be disposed of by the SRR reviewers at the SRR.

# Risks from the TRR Report – Risk # 9

- **RISK # 9 - Changes to the project baseline are not controlled**
- **TRR Assessment: MEDIUM (Severity = HIGH, Likelihood = LOW)**
- **Risk Mitigation:**
  - » **Establish and maintain a project baseline under configuration management (CM).**
  - » **Place the unit test configuration (on iasidev1) under RCS control – ACTION TRR 1.7.13.2**
  - » **Produce a Project Baseline Report (PBR) that identifies each configuration item in the project baseline and documents its change history and the CM/DM tools used to control changes to the project baseline**
  - » **Review the PBR at the SRR**
- **Status: Must determine the status of ACTION TRR 1.7.13.2. Inconsistencies between PBR and other documents must be resolved.**

# Open Actions – TRR 1.7.13.1

- ACTION: TRR 1.7.13.1 - Revise the UTP and/or the PBR to correct inconsistencies.
- CLOSURE CRITERIA:
  - » EUMETSAT PFS L1C file is in the project baseline and documented in the PBR
  - » Config files are correctly and consistently documented in the UTP and PBR
- STATUS: Open. To be completed after SRR but before SPSRB briefing

# Open Actions – TRR 1.7.13.2

- ACTION: TRR 1.7.13.2 - Place the unit test configuration (on iasidev1) under RCS control.
- CLOSURE CRITERIA:
  - » Confirmation that the unit test configuration is on iasidev1 under RCS control.
- STATUS: Open. Can this action be withdrawn?

# Open Actions – TRR 4.4.1.2

- ACTION: TRR 4.4.1.2 - Make the RAD, UTP and TRD consistent and correct. Make filenames in UTP, RAD and TRD consistent with PBR.
- CLOSURE CRITERIA:
  - » Confirmation that the RAD, UTP and TRD consistent and correct
  - » Confirmation that filenames in the UTP, RAD and TRD are consistent with the PBR
- STATUS: **Open.** To be completed after SRR but before SPSRB briefing

# Risks from the TRR Report – Risk # 10

- **RISK # 10 - Project requirements and products are not adequately verified and validated**
- **TRR Assessment: HIGH (Severity = HIGH, Likelihood = MEDIUM)**
- **Risk Mitigation:**
  - » **In a Verification and Validation Report (VVR), document the results from unit testing and system testing. Review the VVR at the SRR.**
  - » **Demonstrate, based on the results from performance testing, that the predicted algorithm performance will satisfy requirements, with reference to the RAD. Document this in the VVR. – ACTION CDR 5.12.1.1.**
  - » **At the SRR, confirm that the VVR and System Readiness Document (SRD) describe the predicted algorithm performance and quality of the products derived from analysis and tests with simulated and/or proxy test data. – ACTION CDR 5.12.1.2.**

# Risks from the TRR Report – Risk # 10

- **Risk Mitigation (continued):**
  - » **Identify performance risks in the VVR. Review performance risks at the SRR – ACTION CDR 5.12.1.3.**
  - » **Address system verification and validation risks and actions at the SRR. – ACTION CDR 1.7.21.6**
- **Status:** Necessary actions have been completed. Risk can be closed upon SRR approval of the VVR.

# Completed Actions – CDR 5.12.1.1

- ACTION: CDR 5.12.1.1 - Document the predicted algorithm performance and quality of the products for review at the SRR
- CLOSURE PLAN:
  - » Write a Verification and Validation Report (VVR), following STAR EPL standards
  - » In the VVR and SRD, demonstrate, based on the results from unit testing and system testing, that the product system will satisfy product quality requirements, with reference to the RAD
  - » Place the VVR and SRD in the project artifact repository.
- STATUS: **Completed**

# Completed Actions – TRR 1.7.12.1

- **ACTION: TRR 1.7.12.1 - Add test data and test sequences that will exercise the error handling functions. Document in UTP and TRD revision.**
- **CLOSURE PLAN**:
  - » Add test data and test sequences that will exercise the error handling functions.
  - » Desirable to have input files with mixed good/bad data, to test whether good data are processed. Desirable to have a stress test, where a larger than usual number of files are in the GFT to test unit level resources.
  - » **Document in UTP and TRD revision – Deleted from closure plan**
  - » **Document in the VVR – Added to closure plan**
- **STATUS: Completed.**

# Completed Actions – TRR 1.7.12.2

- **ACTION: TRR 1.7.12.2 – Include test data and truth data for all unit tests and system test in the SDD**
- **CLOSURE CRITERIA:**
  - » **Confirmation that the SDD includes test data and truth data for all unit tests and system test – Old criteria**
  - » **Confirmation that the VVR describes test data and truth data for all unit tests and system test – New criteria**
- **STATUS: Completed**

# Completed Actions – TRR 4.5.1.1

- ACTION: TRR 4.5.1.1 - **Place the EUMETSAT IASI Level 1 Product Format Specification (2004) and other relevant referenced documents in the project artifact repository**
- CLOSURE CRITERIA:
  - » The EUMETSAT IASI Level 1 Product Format Specification (2004) and other relevant referenced documents in the project artifact repository
- STATUS: **Completed.**

# Completed Actions – TRR 4.9.1.1

- ACTION: TRR 4.9.1.1 - Provide a table for the error codes and their corresponding descriptions.
- CLOSURE CRITERIA:
  - » Confirmation that a table for the error codes and their corresponding descriptions has been provided
- CLOSURE PLAN:
  - » Document this in the OM
- STATUS: Completed.

# Completed Actions – TRR 4.9.1.2

- ACTION: TRR 4.9.1.2 - Test error handling (e.g. interruption of ftp on GFT side). Stress test number of files processed (stress test resources).
- CLOSURE CRITERIA:
  - » Confirmation that the system test tests error handling (e.g. interruption of ftp on GFT side).
  - » Confirmation that the system test includes a stress test of the number of files processed (stress test resources)
- STATUS: Completed.

# Completed Actions – TRR 4.9.1.3

- ACTION: TRR 4.9.1.3 - Add manual inspection of swath and grid images to the test sequence for the Global Grids unit
- CLOSURE CRITERIA:
  - » Confirmation that the test sequence for the Global Grids unit includes manual inspection of swath and grid images
- STATUS: Completed. This is documented in the VVR.

# Open Actions – CDR 5.12.1.2

- ACTION: CDR 5.12.1.2 - Review and approve the predicted algorithm performance and quality of the products at the SRR
- CLOSURE PLAN:
  - » Distribute the Verification and Validation Report (VVR v1r0) to the SRR reviewers
  - » Confirm that the VVR satisfactorily demonstrates, based on the results from unit testing and system testing, that the product system will satisfy product quality requirements, with reference to the RAD
- STATUS: **Open.** To be disposed of by the SRR reviewers.

# Open Actions – CDR 5.12.1.3

- **ACTION: CDR 5.12.1.3 - Address algorithm performance and product quality risks and actions at the SRR**
- **CLOSURE PLAN**:
  - » In the SRD, document all risks and actions associated with algorithm performance and product quality
  - » Distribute the SRD to the SRR Review Team
  - » Review the algorithm performance risks and actions
  - » Review the product quality risks and actions
  - » Discuss algorithm performance and product quality risks and actions with project stakeholders
  - » Address algorithm performance and product quality risks and actions at the SRR
- **STATUS: Open. To be disposed of by the SRR reviewers at the SRR.**

# New Action – TRR 4.10.1.1

- ACTION: TRR 4.10.1.1 - **Evaluate the risk of throwing out good data with mixed bad data. Add to TRD slide 72.**
- CLOSURE CRITERIA:
  - » An evaluation of the risk of throwing out good data with mixed bad data has been added to TRD slide 72.
- STATUS: **Open.** Evaluation completed. There is no risk. TRD revision will be made after SRR and before SPSRB briefing.

# New Action – TRR 4.10.1.2

- ACTION: TRR 4.10.1.2 - **Request DDS size increase. Specify IASI needs in the operations documents.**
- CLOSURE CRITERIA:
  - » IASI resource requirements have been specified in the SDD
  - » Confirmation that the DDS size is sufficient to meet the IASI resource requirements
- STATUS: **Open.** Resource requirements have been specified in the SDD. Increase in DDS size is still needed.

# New Action – TRR 4.10.1.3

- ACTION: TRR 4.10.1.2 - **Add a sub-bullet to TRD slide 148 3rd bullet, noting that spot checking is acceptable**
- CLOSURE CRITERIA:
  - » Revision of TRD slide 148 to note that spot checking is acceptable.
- STATUS: Open. Will be closed after SRR, but before SPSRB briefing.

# Risks from the TRR Report – Risk # 11

- **RISK # 11 - Operator needs are not adequately validated**
- **TRR Assessment: HIGH (Severity = HIGH, Likelihood = MEDIUM)**
- **Risk Mitigation:**
  - » **In the VVR, identify operator needs (operations, maintenance) to be validated – ACTION CDR 8.4.3.1**
  - » **At the SRR, confirm that the project artifacts consistently identify operator needs to be validated – ACTION CDR 8.4.3.2**
  - » **In the Operations Manual (OM), identify the tools and training available for O&M – ACTION CDR 8.4.4.1**
  - » **At the SRR, ensure that the tools and training available for O&M are satisfactory – ACTION CDR 8.4.4.2**
- **Status:** ACTIONs CDR 8.4.3.1, CDR 8.4.4.1 and CDR 12.8 have been completed. Risk can be closed upon SRR approval of the VVR and OM.

# Completed Actions – CDR 8.4.3.1

- ACTION: CDR 8.4.3.1 - Identify and confirm Operations and Maintenance (O&M) needs to be validated.
- CLOSURE PLAN:
  - » Identify O&M needs, including standard operation procedures. Document in the VVR.
  - » Identify the tools and training available for O&M. Document in the OM.
  - » Place the VVR and the OM in the project baseline
  - » Review the VVR and the OM. Approve or state required actions
- STATUS: **Completed**

# Completed Actions – CDR 8.4.4.1

- ACTION: CDR 8.4.4.1 - Develop and/or identify the tools and training available for Operations and Maintenance (O&M)
- CLOSURE CRITERIA:
  - » A VVR that identifies operator training needs is in the project baseline
  - » An OM that identifies the tools and training available for O&M is in the project baseline
- STATUS: **Completed**

# Completed Actions – CDR 12.8

- ACTION: CDR 12.8 - Provide information on how long (number of CPUs) each processing step in the IASI subsetting and distribution system takes. Describe how data is processed; parallel verses sequential processing and processing of blind orbits and missing granules.
- CLOSURE PLAN:
  - » Determine the CPU load and the processing sequence.
  - » Include this information in the Operations Manual (Section 6) and the System Description Document (Section 4)
- STATUS: **Completed.**

# Open Actions – CDR 8.4.3.2

- ACTION: CDR 8.4.3.2 - Address Operations and Maintenance (O&M) risks and actions at the SRR
- CLOSURE PLAN:
  - » In the SRD, document all risks and actions associated with O&M
  - » Distribute the SRD to the SRR Review Team
  - » Review the O&M risks and actions
  - » Discuss O&M risks and actions with project stakeholders
  - » Address O&M risks and actions at the SRR
- STATUS: **Open.** To be disposed of by the SRR reviewers at the SRR.

# Open Actions – CDR 8.4.4.2

- ACTION: CDR 8.4.4.2 - Confirm that the tools and training available for O&M are satisfactory
- CLOSURE CRITERIA:
  - » SRR approval of the tools and training available for O&M
- STATUS: **Open.** To be disposed of by the SRR reviewers at the SRR.

# Risks from the TRR Report – Risk # 12

- **RISK # 12 - User needs are not adequately validated**
- **TRR Assessment: HIGH (Severity = HIGH, Likelihood = MEDIUM)**
- **Risk Mitigation:**
  - » **In the VVR and the SRD, identify user needs (training, support, use of products) to be validated. – ACTION CDR 8.4.6.1**
  - » **In the Users Manual (UM), identify the tools, training, and support services available to users, and the procedures for delivering these to the intended users – ACTION CDR 8.4.6.1**
  - » **At the SRR, confirm that the project artifacts consistently identify user needs to be validated, the tools, training, and support services available to the user, and the procedure for delivering these to the intended users – ACTION CDR 8.4.6.1**
- **Status:** Risk can be closed upon SRR approval of the VVR and UM.

# Open Actions – CDR 8.4.6.1

- ACTION: CDR 8.4.6.1 - Identify and confirm user needs to be validated.
- CLOSURE CRITERIA:
  - » A VVR that identifies user needs is in the project baseline
  - » A UM that identifies the tools, training, and support services available to the user, and the procedure for delivering these to the intended users, is in the project baseline
  - » SRR approval of the VVR and the UM
- STATUS: **Open.** To be disposed of by the SRR reviewers at the SRR.

# Open Actions – CDR 8.4.6.2

- ACTION: CDR 8.4.6.2 - Address user risks and actions at the SRR
- CLOSURE CRITERIA:
  - » SRR disposition of user needs risks and actions
- STATUS: **Open.** To be disposed of by the SRR reviewers at the SRR.

# New Action – SRR 0.4.1

- ACTION: SRR 0.4.1 - Write an ftp script to transfer METOP instrument Level 2 products (temperature and moisture profiles) in BUFR format to the Shared Processing Network (SPN).
- CLOSURE CRITERIA:
  - » The ftp script is added to the IASI L1CT product processing system code and documented in the operations documents
- STATUS: **Open.** This script cannot be used until the Level 2 products are available. It will be written for a future release.

# Risks from the TRR Report – Risk # 13

- **RISK # 13 - Project risks are not properly reviewed and mitigated**
- **TRR Assessment: LOW (Severity = LOW, Likelihood = LOW)**
- **Risk Mitigation:**
  - » **Continue to monitor risks and actions after the TRR – ACTION TRR 0.3.1**
- **Status:** ACTION TRR 0.3.1 has been implemented. Risk is greatly reduced.

# Completed Actions – TRR 0.3.1

- ACTION: TRR 0.3.1 - Monitor risks and actions after the TRR
- CLOSURE CRITERIA: Updated status of risks and actions is documented in the System Readiness Document for approval at the System Readiness Review
- CLOSURE PLAN:
  - » Hold IASI team meetings on a regular basis
  - » Address the status of risks and actions at these meetings
  - » Update status of risks and actions in the System Readiness Document for review at SRR.
- STATUS: **Completed**

# Risks from the TRR Report – Risk # 14

- **Risk # 14: Calibration or geolocation errors in the IASI data that are not in the QC flags.**
- **TRR Assessment: MEDIUM (Severity = HIGH, Likelihood = LOW)**
- **Impact: Incorrect QC flagged data sent to the users**
- **Mitigation:**
  - » **Implement an extensive validation system to check both radiances and products – ACTION CDR 12.14**
  - » **Document this in the Verification and Validation Report – ACTION TRR 0.2.1**
- **Status:** ACTIONs CDR 12.14 and TRR 0.2.1 have been completed. Risk can be closed upon SRR approval of the VVR.

# Completed Actions – CDR 12.14

- ACTION: CDR 12.14 - Implement a validation system to check for geolocation and calibration errors
- CLOSURE CRITERIA:
  - » An off-line validation system to check for geolocation and calibration errors is developed, tested, and implemented.
- CLOSURE PLAN:
  - » Execute geolocation and calibration error tests in the system test.
  - » Document results in the IASI L1CT VVR.
- STATUS: **Completed.**

# Completed Actions – TRR 0.2.1

- ACTION: TRR 0.2.1 - Document the IASI validation system in the System Test Plan (STP) and the Verification and Validation Report (VVR)
- CLOSURE CRITERIA: The IASI validation system has been documented in the VVR
- CLOSURE PLAN:
  - » Document the IASI validation system in the VVR
- STATUS: **Completed.**

# Risks from the TRR Report – Risk # 15

- **Risk # 15: STAR EPL pathfinder project activities introduce schedule risk**
- **TRR Assessment: MEDIUM (Severity = MEDIUM, Likelihood = LOW)**
- **Impact: Quality and/or timeliness of planned tasks will be compromised**
- **Mitigation:**
  - » **Determine pathfinder tasks so that IASI L1CT schedule risk is acceptable - ACTION CDR 12.15**
  - » **Integrate pathfinder tasks into project plan - ACTION CDR 12.15**
  - » **Review and approve project plan at the TRR - ACTION CDR 12.15**
  - » **Monitor project status weekly to identify and relieve schedule delays.**
- **Status: Completion of ACTION CDR 12.15 closes this risk.**

# Completed Actions – CDR 12.15

- ACTION: CDR 12.15 - Determine pathfinder tasks so that the IASI L1CT schedule risk is acceptable.
- CLOSURE CRITERIA: A revised project plan that includes the selected pathfinder tasks is determined to have a low risk impact on the IASI L1CT schedule.
- STATUS: Completed. Tasks are documented in the project plan that was presented in Section 1.

# Risks from the TRR Report– Risk # 17

- **Risk # 17: Possibility of a large backlog of processing**
- **IASI Team Assessment: HIGH (Severity = MEDIUM, Likelihood = HIGH)**
- **Impact: Data distribution to customers would be delayed.**
- **Mitigation (ACTION CDR 12.18):**
  - » **Clarify with the users how fresh their data can be. Translate into latency requirements.**
  - » **Perhaps refine latency requirements, using expected latency performance and customer needs as input data for analysis.**
  - » **Document the operations strategy for backlogs in the Operations Manual**
- **Status: Can be closed. Strategy for backups is integrated into the system architecture. No operator actions are required. This is documented in the OM.**

# Completed Actions – CDR 12.18

- ACTION: CDR 12.18 - Clarify and specify latency requirements
- CLOSURE PLAN:
  - » Discuss latency requirement with customers.
  - » Clarify with the users how fresh the data can be. Will they accept data older than 3 hours? How much older is acceptable?
  - » Put clarified user needs into the RAD.
  - » Document the operations strategy for backlogs into the Operations Manual.
- STATUS: **Completed.** Latency requirements have been added in RAD v1r1. Strategy for backups is integrated into the system architecture. No operator actions are required. This is documented in the OM.

# Risks from the TRR Report – Risk # 18

- **Risk # 18: Problems with transition to operations due to a lack of personnel on the operations side**
- **TRR Assessment: MEDIUM (Severity = HIGH, Likelihood = LOW)**
- **Impact: Possible delay in the scheduled beginning of operational production of IASI L1CT products**
- **Mitigation (ACTION TRR 1.3.3.1):**
  - » **IASI Development team meetings with IASI operations team members on a regular basis**
  - » **Provide operational contacts with draft versions of the IASI operations documents**
  - » **invite operational contacts to participate in the remaining IASI Technical Reviews, beginning with Test Readiness Review.**
- **Status: ACTION TRR 1.3.3.1 has been completed. This risk can be closed.**

# Completed Actions – TRR 1.3.3.1

- ACTION: TRR 1.3.3.1 - Meet with IASI Operations team on a regular basis
- CLOSURE PLAN:
  - » Include IASI Operations personnel in regular meetings of the IASI Development team (ideally weekly meetings) leading up to SRR.
  - » Develop a plan and schedule for contacts between the Development team and Operations personnel after SRR
- STATUS: **Completed.** Regular weekly meetings have been held. A plan to continue these meetings after SRR has been included in the project plan, as discussed in Section 1 of this SRD.

# Risks from the TRR Report – Risk # 20

- **Risk # 20: No confirmed date for briefing to SPSRB**
- **IASI Team Assessment: HIGH (Severity = HIGH, Likelihood = MEDIUM)**
- **Impact: Delay in briefing may delay the commencement of operations**
- **Mitigation:**
  - » **Work with SPSRB to confirm a Sept. 21 date for the SPSRB briefing – ACTION TRR 0.1.1**
- **Status:** Sept 21 date is confirmed. This risk can be closed.

# Completed Actions – TRR 0.1.1

- ACTION: TRR 0.1.1 - Finalize dates for the SRR and the SPSRB briefing
- CLOSURE CRITERIA:
  - » Dates have been set for the SRR and the SPSRB briefing at least 2 weeks after the SRR
- CLOSURE PLAN:
  - » A.K. Sharma to arrange a Sept 19 briefing with SPSRB
  - » TRR Review Team to confirm an Aug 30 date for the SRR
- STATUS: **Completed.** Date is set for Sept 21, 2007.

# Risks from the TRR Report – Risk # 21

- **Risk # 21: Possibility that the EUMETSAT data are not available for operations**
- **TRR Assessment: MEDIUM (Severity = HIGH, Likelihood = LOW)**
- **Impact: No products of any kind would be produced by the system**
- **Mitigation:**
  - » **Procedure is to contact ESPC (who manage the GFT) or possibly EUMETSAT to determine why data are not available.**
  - » **Identify a POC for the GFT – ACTION TRR 5.3.2.1**
  - » **Document the procedure in the OM – ACTION TRR 0.4.2**
- **Status:** ACTIONs TRR 5.3.2.1 and TRR 0.4.2 have been completed. Risk can be closed upon SRR approval of the OM.

# Completed Actions – TRR 0.4.2

- ACTION: TRR 0.4.2 - Document the procedure to handle EUMETSAT data unavailability in the Operations Manual (OM)
- CLOSURE CRITERIA: The procedure to handle EUMETSAT data unavailability has been documented in the OM for review at the System Readiness Review
- CLOSURE PLAN:
  - » Document the procedure to handle EUMETSAT data unavailability in the OM
- STATUS: **Completed.**

# Completed Actions – TRR 5.3.2.1

- ACTION: TRR 5.3.2.1 – Provide a POC for GFT
- CLOSURE CRITERIA:
  - » A POC for GFT has been identified and documented in the OM
- CLOSURE PLAN:
  - » Identify a POC for GFT.
  - » Document GFT POC in the OM.
- STATUS: **Completed.** Vince Tabor is the POC.

# Risks from the TRR Report – Risk # 23

- **Risk # 23: Instrument quality degradation**
- **TRR Assessment: MEDIUM (Severity = MEDIUM, Likelihood = MEDIUM)**
- **Impact: Degraded IASI L1C data could be sent to users.**
- **Mitigation:**
  - » **Design the IASI validation system to detect instrument quality degradation - Done**
  - » **Create a web site that contains the near real-time status information for the wellness of the IASI instrument - Done**
  - » **Put in place a procedure to notify EUMETSAT and IASI users when instrument quality degradation is detected – ACTION TRR 0.6.2**
  - » **Document the instrument quality degradation validation and notification procedures – ACTION TRR 0.6.3**
- **Status: All actions have been completed. This risk can be closed upon SRR approval of the SMM, OM and VVR.**

# Completed Actions – TRR 0.6.2

- ACTION: TRR 0.6.2 - Put in place a procedure to notify EUMETSAT and IASI users when instrument quality degradation is detected.
- CLOSURE PLAN:
  - » Establish a EUMETSAT contact
  - » Establish user contacts
  - » Work out with these contacts an instrument quality degradation notification procedure
- STATUS: **Completed.** Documented in the OM and VVR.

# Completed Actions – TRR 0.6.3

- ACTION: TRR 0.6.3 - Document the instrument quality degradation validation and notification procedures
- CLOSURE PLAN:
  - » Document the procedure for detecting instrument quality degradation in the Verification and Validation Report for review at SRR.
  - » Document the instrument quality degradation notification procedure in the System Maintenance Manual (SMM) and the Operations Manual (OM)
  - » Document validation of notification procedures in the VVR
- STATUS: **Completed.**

# Risks from the TRR Report – Risk # 25

- **Risk # 25: Possibility of unexpected changes in the input data formats we received from EUMETSAT (L1C), NOAA/OSDPD (L1B), or NOAA/NCEP (GFS forecasts)**
- **TRR Assessment: MEDIUM (Severity = HIGH, Likelihood = LOW)**
- **Impact: Unpredictable behavior of the system, resulting in bad products or no products**
- **Mitigation:**
  - » **Obtain an agreement with each data provider that ensures timely notification of data format changes – ACTION TRR 0.7.1**
  - » **Document the agreements in the Interface Control Document – ACTION TRR 0.7.2**
  - » **Refer to MOU between EUMETSAT and NOAA in the ICD**
  - » **Subscribe to input data source distribution list (NCEP) – ACTION TRR 1.7.7.4**
- **Status: Open.** MOU needs to be found. ICD will need update when this is found.

# Open Actions – TRR 0.7.1

- ACTION: TRR 0.7.1 - Obtain an agreement with each data provider that ensures timely notification of data format changes
- CLOSURE CRITERIA:
  - » An agreement that ensures timely notification of data format changes is obtained with each data provider
- STATUS: Open.

# Open Actions – TRR 0.7.2

- ACTION: TRR 0.7.2 - In the Interface Control Document (ICD), document agreements with data providers that ensure timely notification of data format changes
- CLOSURE CRITERIA:
  - » Agreements with data providers that ensure timely notification of data format changes are documented in the ICD
- STATUS: **Open.**

# Completed Actions – TRR 1.7.7.4

- ACTION: TRR 1.7.7.4 – Subscribe to input data source distribution list (NCEP)
- CLOSURE CRITERIA:
  - » IASI Operations and Validation teams are on the NCEP distribution list
- STATUS: Completed. Individuals must subscribe. Messages have been sent to the appropriate individuals.

# Risks from the TRR Report – Risk # 31

- **Risk # 31: The scheduler for the IASI subsetting and distribution system is not established**
- **TRR Assessment: MEDIUM (Severity = MEDIUM, Likelihood = LOW)**
- **Impact: Run schedule problems**
- **Mitigation:**
  - » **Describe the Perl script scheduler in operations documentation**
  - » **Verify the scheduler in the System Test – ACTION TRR 5.3.2.2**
  - » **Review and approve the scheduler documentation and testing at the SRR – ACTION TRR 5.3.2.3**
- **Status:** Risk can be closed upon SRR approval of the VVR.

# Completed Actions – TRR 5.3.2.2

- ACTION: TRR 5.3.2.2 – Verify the scheduler
- CLOSURE PLAN:
  - » Test the scheduler in the System Test
  - » Report test results in the VVR
- STATUS: Completed.

# Open Actions – TRR 5.3.2.3

- ACTION: TRR 5.3.2.3 – Review and approve the scheduler at the SRR
- CLOSURE PLAN:
  - » Review the results of the test of the scheduler, as documented in the VVR
  - » Approve the scheduler or recommend actions
- STATUS: Open. To be disposed of by the SRR reviewers.

# New Risks – Risk # 32

- **Risk # 32: Unit test results have not been reviewed and approved**
- **Assessment: HIGH (Severity = HIGH, Likelihood = HIGH)**
- **Impact: Software units fail to meet requirements**
- **Mitigation:**
  - » **Document unit test results for review at SRR – ACTION SRR 0.1.1**
  - » **Review and approve unit test results at the SRR – ACTION SRR 0.1.2**
- **Status:** Action SRR 0.1.1 has been completed. Risk can be closed upon SRR approval of the VVR.

# Open Actions – SRR 0.1.1

- ACTION: SRR 0.1.1 – Document unit test results in SRR project artifacts
- CLOSURE PLAN:
  - » Report the results from unit tests in the VVR
- STATUS: Open. This will be completed after SRR, but before SPSRB briefing.

# Open Actions – SRR 0.1.2

- ACTION: SRR 0.1.2 – Review and approve unit test results at the SRR
- CLOSURE PLAN:
  - » Review the results of the unit tests, as documented in the VVR
  - » Approve the unit test results or recommend actions
- STATUS: Open. To be disposed of by the SRR reviewers.

# New Risks – Risk # 33

- **Risk # 33: A system test plan has not been reviewed and approved**
- **Assessment: HIGH (Severity = HIGH, Likelihood = HIGH)**
- **Impact: System fails to meet requirements**
- **Mitigation:**
  - » **Describe the system test for review at SRR – ACTION SRR 0.2.1**
  - » **Review and approve the system test at the SRR – ACTION SRR 0.2.2**
- **Status: Action SRR 0.2.1 has been completed. Risk can be closed upon SRR approval of the VVR.**

# Open Actions – SRR 0.2.1

- ACTION: SRR 0.2.1 – Describe the system test in SRR project artifacts
- CLOSURE PLAN:
  - » Describe the system test in the VVR
- STATUS: Open. This will be completed after SRR, but before SPSRB briefing.

# Open Actions – SRR 0.2.2

- ACTION: SRR 0.1.2 – Review and approve the system test at the SRR
- CLOSURE PLAN:
  - » Review the system test description, as documented in the VVR
  - » Approve the system test or recommend actions
- STATUS: Open. To be disposed of by the SRR reviewers.

# New Risks – Risk # 34

- **Risk # 34: Operations test environment is not available for system test**
- **Assessment: MEDIUM (Severity = HIGH, Likelihood = LOW)**
- **Impact: System test results are not reproduced in the operations environment**
- **Mitigation:**
  - » **Write a CCR for connectivity**
  - » **CCR approval**
- **Status:** This risk can be closed.

# Completed Actions – SRR 0.3.1

- ACTION: SRR 0.3.1 – Establish connectivity from iasitest1 and iasiprod1 to GFT and DDS.
- CLOSURE PLAN:
  - » Write a CCR
  - » Russ Lancaster establishes connectivity
- STATUS: **Completed.**

# New Risks – Risk # 35

- **Risk # 35: DDS lacks the disk space and bandwidth to be able to accept or distribute BUFR files and global grid files**
- **Assessment: HIGH (Severity = HIGH, Likelihood = HIGH)**
- **Impact: Customer requirements will not be satisfied**
- **Mitigation:** Work with Cathy Nichols to upgrade DDS size
- **Status:** PGD level. No IASI actions, **but it is important to close this risk.**

# New Risks – Risk # 36

- **Risk # 36: File transfer protocol for monitoring log files has not been established**
- **Assessment: LOW (Severity = LOW, Likelihood = LOW)**
- **Impact: 24/7 monitoring can not be performed**
- **Mitigation:**
  - » Submit a CCR to get connectivity from IASI machines to Balmy
  - » Establish file transfer protocol
  - » Write a script to do the file transfer to Balmy – **ACTION SRR 0.5.1**
- **Status: Open.**

# Open Actions – SRR 0.5.1

- ACTION: SRR 0.5.1 – Write a script to do the file transfer to Balmy
- CLOSURE PLAN:
  - » Obtain connectivity to Balmy
  - » Obtain file transfer protocol
  - » Write the script
- STATUS: Open.

# Risk Summary

- **26** risks have been addressed at the SRR
  - » 7 HIGH risks
  - » 16 MEDIUM risks
  - » 3 LOW risks
- **5** risks have been closed by completion of all associated actions prior to SRR
- **12** risks can be closed when SRR exit criteria have been passed by the SRR reviewers
- **9** risks will remain open after SRR.

# Risks Closed Since TRR

- **Risk # 15 – STAR EPL pathfinder project activities introduce schedule risk**
  - » **Status: Closed.** A revised project plan that includes the selected pathfinder tasks is determined to have a minimal impact on the IASI L1CT schedule.
- **Risk # 17 – Possibility of a large backlog of processing**
  - » **Status: Closed.** Strategy for backups is integrated into the system architecture. No operator actions are required. This is documented in the OM.
- **Risk # 18 – Problems with transition to operations due to a lack of personnel on the operations side**
  - » **Status: Closed.** Ongoing weekly meetings with OSDPD have eliminated this risk.
- **Risk # 20 – No confirmed date for briefing to SPSRB**
  - » **Status: Closed. Sept 21 date is confirmed.**
- **Risk # 34 – Operations test environment is not available for system test**
  - » **Status: Closed. C**onnectivity has been established from iasitest1 and iasiprod1 to GFT and DDS.

# Risks That Can Be Closed (1)

- **Risk # 2 – The project requirements do not take into account all customer needs and expectations**
  - » **Status: Approval of RAD v1r1 can close this risk.**
- **Risk # 4 – The algorithm is not able to meet the project requirements**
  - » **Status: Approval of the algorithm descriptions in VVR v1r0 and UM v1r0 can close this risk.**
- **Risk # 5 – The external interfaces in the design are not available or sufficient to meet project requirements**
  - » **Status: Approval of ICD v1r0 can close this risk.**

# Risks That Can Be Closed (2)

- **Risk # 6 – Project metadata do not meet customer requirements**
  - » **Status:** Approval of MDD v1r0 can close this risk.
- **Risk # 7 – The design documentation is insufficient to ensure that the code will make products that meet project requirements**
  - » **Status:** Approval of SDD v1r0 can close this risk.
- **Risk # 10 – Project requirements and products are not adequately verified and validated**
  - » **Status:** Approval of VVR v1r0 can close this risk.

# Risks That Can Be Closed (3)

- **Risk # 11 – Operator needs are not adequately validated**
  - » **Status:** Approval of VVR v1r0 and OM v1r0 can close this risk.
- **Risk # 13 – Project risks are not properly reviewed and mitigated**
  - » **Status:** Disposal of risks in the SRR Report can close this risk.
- **Risk # 14 – Calibration or geolocation errors in the IASI data that are not in the QC flags.**
  - » **Status:** Approval of VVR v1r0 can close this risk.

# Risks That Can Be Closed (4)

- **Risk # 21 – Possibility that the EUMETSAT data are not available for operations**
  - » **Status:** Approval of OM v1r0 can close this risk.
- **Risk # 23 – Instrument quality degradation**
  - » **Status:** Approval of SMM v1r0, OM v1r0 and VVR v1r0 can close this risk.
- **Risk # 31 – The scheduler for the IASI subsetting and distribution system is not established**
  - » **Status:** Approval of VVR v1r0 can close this risk.

# Risks That Remain Open – Risk # 3

- **RISK # 3 - Project stakeholders are not identified or involved in the project plan and its implementation**
- **Assessment: LOW (Severity = LOW, Likelihood = LOW)**
- **Open Actions:**
  - » ACTION: TRR 1.3.3.1 - Conduct regular meetings between the IASI Development Team and IASI Operations personnel

# Risks That Remain Open – Risk # 8

- **RISK # 8 - Requirements are not completely allocated to system components and product components**
- **Assessment: LOW (Severity = LOW, Likelihood = LOW)**
- **Open Actions:**
  - » ACTION: TRR 4.4.1.2 - Make the RAD, UTP and TRD consistent and correct. Make filenames in UTP, RAD and TRD consistent with PBR.
  - » ACTION: TRR 4.9.1.4 - Document allocation of requirements 2.0, 2.1, 2.2, 4.2 and 5.6 consistently in the RAD, UTP, and TRD.

# Risks That Remain Open – Risk # 9

- **RISK # 9 - Changes to the project baseline are not controlled**
- **Assessment: MEDIUM (Severity = MEDIUM, Likelihood = LOW)**
- **Open Actions:**
  - » ACTION: TRR 1.7.13.2 - Place the unit test configuration (on iasidev1) under RCS control.
  - » ACTION: TRR 4.4.1.2 - Make the RAD, UTP and TRD consistent and correct. Make filenames in UTP, RAD and TRD consistent with PBR.

# Risks That Remain Open – Risk # 12

- **RISK # 12 - User needs are not adequately validated**
- **Assessment: LOW (Severity = LOW, Likelihood = LOW)**
- **Open Actions:**
  - » ACTION: SRR 0.4.1 - Write an ftp script to transfer METOP instrument Level 2 products (temperature and moisture profiles) in BUFR format to the Shared Processing Network (SPN).

# Risks That Remain Open – Risk # 25

- **RISK # 25 - Possibility of unexpected changes in the input data formats we received from EUMETSAT (L1C), NOAA/OSDPD (L1B), or NOAA/NCEP (GFS forecasts)**
- **Assessment: MEDIUM (Severity = HIGH, Likelihood = LOW)**
- **Open Actions:**
  - » ACTION: TRR 0.7.1 - Obtain an agreement with each data provider that ensures timely notification of data format changes
  - » ACTION: TRR 0.7.2 - In the Interface Control Document (ICD), document agreements with data providers that ensure timely notification of data format changes

# Risks That Remain Open – Risk # 32

- **Risk # 32 – Unit test results have not been reviewed and approved**
- **Assessment: HIGH (Severity = HIGH, Likelihood = HIGH)**
- **Open Actions:**
  - » ACTION: SRR 0.1.1 - Document unit test results in SRR project artifacts

# Risks That Remain Open – Risk # 33

- **Risk # 33 – A system test plan has not been reviewed and approved**
- **Assessment: HIGH (Severity = HIGH, Likelihood = HIGH)**
- **Open Actions:**
  - » ACTION: SRR 0.2.1 - Describe the system test in SRR project artifacts

# Risks That Remain Open – Risk # 35

- **RISK # 35 - DDS lacks the disk space and bandwidth to be able to accept or distribute BUFR files and global grid files**
- **Assessment: HIGH (Severity = HIGH, Likelihood = HIGH)**
- **Open Actions:**
  - » PGD level. No IASI actions, **but it is important to close this risk.**

# Risks That Remain Open – Risk # 36

- **Risk # 36: File transfer protocol for monitoring log files has not been established**
- **Assessment: LOW (Severity = LOW, Likelihood = LOW)**
- **Open Actions:**
  - » ACTION: SRR 0.5.1 – Write a script to do the file transfer to Balmy

1. INTRODUCTION
2. TEST READINESS REVIEW REPORT
3. SYSTEM REQUIREMENTS
4. SYSTEM DESCRIPTION
5. SYSTEM READINESS
6. RISKS AND ACTIONS
7. SUMMARY AND CONCLUSIONS

# Section 7 –
# Summary and Conclusions

Presented by

Lihang Zhou
PSGS

# Review Objectives Have Been Addressed

- Test Readiness Review Report has been reviewed
  - » SRR entry and exit criteria established
  - » 10 risks closed, 25 risks to be addressed by the SRR
- System requirements have been reviewed
  - » Updated requirements and requirements allocations reduce risks
- System description has been reviewed
  - » System description documentation reduces risks
- System readiness has been reviewed
  - » Code, documentation, and validation results reduce risks
- Risks and actions have been reviewed
  - » 29 risks are closed or can be closed
  - » 6 open risks can be closed with well-defined, manageable actions

# Next Steps

- Reduction of risks
  - » Complete actions that remain open after SRR
- Code transition to operations
  - » Deliver code to OSDPD
  - » OSDPD Contractor Staff Training for IASI Products System
- SPSRB Briefing (Sept. 21)
  - » Brief IASI L1CT capability for operations
  - » Assist OSDPD to prepare for the briefing
- Commence IASI L1CT operations (Sept. 28)
  - » OSD updates Satellite Products database

# Open Discussion

- The review is now open for free discussion

# NOAA NESDIS
# CENTER for SATELLITE APPLICATIONS and RESEARCH

# INFRARED ATMOSPHERIC SOUNDING INTERFEROMETER (IASI)

## IASI LEVEL 1 PRODUCTS

## SYSTEM READINESS REVIEW REPORT

## Version 1.1

Hardcopy Uncontrolled

TITLE: IASI LEVEL 1 PRODUCTS SYSTEM READINESS REVIEW REPORT VERSION 1.0

AUTHORS:

Ken Jensen (Raytheon Information Solutions)

Awdhesh Sharma (OSDPD)

David Donahue (OSDPD)

Shuang Qiu (PSGS/QSS)

Deyong Xu (OSDPD)

Tianxu Yu (OSDPD)

APPROVAL SIGNATURES:

_____October 30, 2007__.
Awdhesh Sharma (OSDPD) Date
IASI System Readiness Review Lead

IASI LEVEL 1 PRODUCTS SYSTEM READINESS REVIEW REPORT
VERSION HISTORY SUMMARY

| Version | Description | Revised Sections | Date |
|---|---|---|---|
| 1.0 | New Document by IASI L1CT System Readiness Review Team | New Document | 10/12/2007 |
| 1.1 | Updated status of entry and exit criteria, risks and actions | All | 10/30/07 |

## TABLE OF CONTENTS

Page

LIST OF TABLES ..... 9

LIST OF ACRONYMS ..... 11

PREFACE ..... 13

PREFACE ..... 13

1. SRR ENTRY CRITERIA ..... 15

2. SRR RISKS ..... 17

3. SRR ACTIONS ..... 29

3.1 Completed TRR Actions ..... 29

3.2 Open TRR Actions ..... 48

3.3 New Actions ..... 52

4. SRR EXIT CRITERIA ..... 58

APPENDIX A – SRR CHECKLIST DISPOSITION ..... 60

## LIST OF TABLES

Page

Table A.1 – IASI L1CT SRR checklist disposition ..... 60

## LIST OF ACRONYMS

| | |
|---|---|
| AFWA | Air Force Weather Agency |
| AIRS | Atmospheric Infrared Sounder |
| ATBD | Algorithm Theoretical Basis Document |
| CDR | Critical Design Review |
| CDRR | Critical Design Review Report |
| CICS | Cooperative Institute for Climate Studies |
| CIMSS | Cooperative Institute for Meteorological Satellite Studies |
| CIOSS | Cooperative Institute for Oceanographic Satellite Studies |
| CIRA | Cooperative Institute for Research in the Atmosphere |
| CLASS | Comprehensive Large-Array Stewardship System |
| CLI | Check List Item |
| CM | Configuration Management |
| CM/DM | Configuration Management/Data Management |
| CPU | Central Processing Unit |
| CREST | Cooperative Remote Sensing and Technology Center |
| CUTR | Code Unit Test Review |
| DSA | Data Submission Agreement |
| EPL | Enterprise Product Lifecycle |
| ESPC | Environmental Satellite Processing Center |
| EUMETSAT | European Organisation for the Exploitation of Meteorological Satellites |
| FGDC | Federal Geographic Data Committee |
| FNMOC | Fleet Numerical Meteorology and Oceanography Center |
| GFS | Global Forecast System |
| GFT | Generic File Transfer |
| IASI | Infrared Atmospheric Sounding Instrument |
| ICD | Interface Control Document |
| L1CT | Level 1C Thinned Radiances |
| LUT | Look-Up Table |
| MDD | Metadata Document |
| MOU | Memorandum of Understanding |
| N/A | Not Applicable |

| | |
|---|---|
| NCEP | National Centers for Environmental Prediction |
| NESDIS | National Environmental Satellite, Data, and Information Service |
| NOAA | National Oceanic and Atmospheric Administration |
| NRL | Naval Research Laboratory |
| NRT | Near Real Time |
| O&M | Operations and Maintenance |
| OCD | Operations Concept Document |
| OM | Operations Manual |
| OSD | Office of Systems Development |
| OSDPD | Office of Satellite Data Processing and Distribution |
| PAL | Process Asset Library |
| PBR | Project Baseline Report |
| PGD | Product Generation and Delivery |
| POC | Point of Contact |
| RAD | Requirements Allocation Document |
| RCS | Revision Control System |
| RPP | Research Project Plan |
| SDD | System Description Document |
| SMM | System Maintenance Manual |
| SPSRB | Satellite Products and Services Review Board |
| STAR | Center for Satellite Applications and Research |
| STP | System Test Plan |
| SRD | System Readiness Document |
| SRR | System Readiness Review |
| TRD | Test Readiness Document |
| TRR | Test Readiness Review |
| TRRR | Test Readiness Review Report |
| UM | Users Manual |
| UTP | Unit Test Plan |
| VVR | Verification and Validation Report |

## PREFACE

The NOAA/NESDIS Center for Satellite Applications and Research (STAR) develops a diverse spectrum of complex, often interrelated, environmental algorithms and software systems. These systems are developed through extensive research programs, and transitioned from research to operations when a sufficient level of maturity and end-user acceptance is achieved. Progress is often iterative, with subsequent deliveries providing additional robustness and functionality. Development and deployment is distributed, involving STAR, the Cooperative Institutes (CICS, CIMSS, CIOSS, CIRA, CREST) distributed throughout the US, multiple support contractors, and NESDIS Operations.

NESDIS/STAR is implementing an increased level of process maturity to support the exchange of these software systems from one location or platform to another. The System Readiness Review Report (SRRR) is one component of this process.

An SRRR is produced following a project's System Readiness Review (SRR). It is a required project artifact of the STAR Enterprise Product Lifecycle (EPL). The intended target audiences are program management, the product development team, and the Satellite Products and Services Review Board (SPSRB).

This SRRR contains the following sections:

Section 1.0 - SRR Entry Criteria
Section 2.0 - SRR Risks
Section 3.0 - SRR Actions
Section 4.0 - SRR Exit Criteria
Appendix A - SRR Check List Disposition

**Formatted:** French (France)

## 1. SRR ENTRY CRITERIA

- Entry # 1 - A Test Readiness Review Report (TRRR) has been written. The SRR reviewers have access to the approved version of the TRRR.
  - STATUS: PASS
- Entry # 2 - High level tasks and project milestones have been documented in a Microsoft Project file. The SRR reviewers have access to the approved version of the project file.
  - STATUS: PASS
- Entry # 3 - A revised Requirements Allocation Document (RAD v1r1) has been written. The SRR reviewers have access to the approved version of RAD v1r1. Open actions on the requirements allocation have been documented in the TRRR.
  - STATUS: PASS
- Entry # 4 - An Interface Control Document (ICD v1r0) has been written. The SRR reviewers have access to the approved version of the ICD. Open actions on the external interfaces have been documented in the TRRR..
  - STATUS: PASS
- Entry # 5 - A System Description Document (SDD v1r0) has been written. The SRR reviewers have access to the approved version of the SDD. Open actions on the system description have been documented in the TRRR.
  - STATUS: PASS
- Entry # 6 - A Metadata Document (MDD v1r0) has been written. The SRR reviewers have access to the approved version of the MDD. Open actions on the metadata description have been documented in the TRRR.
  - STATUS: PASS
- Entry # 7 - An Operations Manual (OM v1r0) has been written. The SRR reviewers have access to the approved version of the OM. Open actions on the operations documentation have been documented in the TRRR.
  - STATUS: PASS

- Entry # 8 - A System Maintenance Manual (SMM v1r0) has been written. The SRR reviewers have access to the approved version of the SMM. Open actions on the maintenance documentation have been documented in the TRRR.
    - STATUS: PASS

- Entry # 9 - A Users Manual (UM v1r0) has been written. The SRR reviewers have access to the approved version of the UM. Open actions on the users documentation have been documented in the TRRR.
    - STATUS: PASS

- Entry # 10 - Pre-operational code units, external interfaces, ancillary data, and system test data have been integrated into a product processing system in the operational test environment. The SRR reviewers have access to the product processing system. Open actions on the product processing system have been documented in the TRRR.
    - STATUS: CONDITIONAL PASS.
        - System test data are missing from the system delivered to operations. Action SRR 2.5.14.1 has been added (c.f. Section 3.3 of this SRRR). This action is still open, but closure is not needed for commencement of operations.

- Entry # 11 - A Verification and Validation Report (VVR v1r0) has been written. The TRR reviewers have access to the approved version of the VVR. Open actions on verification and validation have been documented in the TRRR.
    - STATUS: PASS

- Entry # 12 - A Project Baseline Report (PBR v2r0) has been written. The TRR reviewers have access to the approved version of PBR v2r0.
    - STATUS: PASS

- Entry # 13 - A System Readiness Document (SRD) has been written. SRR review objectives are clearly stated in the SRD. Deviations from the STAR EPL standard objectives for an SRR have been approved.
    - STATUS: PASS

## 2. SRR RISKS

This section itemizes and reports on the project risks that have been identified during the product lifecycle through SRR (step 14 of the STAR EPL). All risks should be associated with one or more Check List Items (CLIs) from the STAR EPL reviews. Risks evaluated as HIGH or MEDIUM should have a mitigation plan that is associated with one or more review actions. The associated actions will be discussed in Section 3 of this SRRR.

Risks # 1 - 13 were identified in the CDRR. Risks # 14 – 31 were added during preparations for TRR. Of the 31 risks identified prior to the TRR, 13 were categorized as HIGH risk, 17 were categorized as MEDIUM risk, and 1 was categorized as LOW risk.

Actions to prepare for TRR resulted in a considerable improvement in the risks status. Ten risks were closed. Of the remaining 21 risks, 4 were categorized as HIGH risk, 15 were categorized as MEDIUM risk, and 2 were categorized as LOW risk.

Five new risks (Risks # 32 – 36 were added during preparations for SRR. Three of these are categorized as HIGH risk, one as MEDIUM risk, and one as LOW risk.

Actions to prepare for SRR resulted in considerable improvement in the status of the remaining 26 risks. The development team reported at SRR that five risks are closed. Of the remaining 21 risks, 13 are closed by approval of SRR artifacts and by post-SRR action closures, 7 can be closed upon completion of the remaining open IASI actions, and one will require PGD-level action.

Details follow for each of the 26 risks that were addressed at the SRR.

---
-

**RISK # 2 - The project requirements do not take into account all customer needs and expectations**

- Risk History: Identified in the CDRR as a HIGH risk. Reduced to a MEDIUM risk in the TRRR. Documentation of FNMOC needs was requested.
- Risk Assessment: NONE. Approval of RAD v1r1 closes this risk.
- Risk Mitigation:
  - None
- Open Actions:
  - None

---
-

**RISK # 3 – Project stakeholders are not identified or involved in the project plan and its implementation**

- Risk History: Identified in the CDRR as a MEDIUM risk. Reduced to LOW in the TRRR, as regular meetings between the IASI Development Team and IASI Operations were initiated.
- Risk Assessment: LOW (Impact = LOW, Likelihood = LOW). The SRR reviewers are keeping this risk open, as it is believed that regular meetings between the IASI Development Team and IASI Operations personnel should continue until transition to operations is completed.
- Risk Mitigation:
  - Conduct regular meetings between the IASI Development Team and IASI Operations personnel
  - Place the project plan file in the project artifact repository.
- Open Actions:
  - TRR 1.3.3.1

---
-

**RISK # 4 - The algorithm is not able to meet the project requirements**

- Risk History: Identified in the CDRR as a MEDIUM risk
- Risk Assessment: NONE. Approval of the algorithm descriptions in VVR v1r0 and UM v1r0 closes this risk.
- Risk Mitigation:
  - None
- Open Actions:
  - None

---
-

**RISK # 5 – The external interfaces in the design of the IASI L1C product processing system are not available or sufficient to meet project requirements**

- Risk History: Identified in the CDRR as a HIGH risk
- Risk Assessment: NONE. Approval of ICD v1r1 closes this risk.
- Risk Mitigation:
  - None
- Open Actions:
  - None

---
-

**RISK # 6 – Project metadata do not meet customer requirements**

- Risk History: Identified in the CDRR as a MEDIUM risk
- Risk Assessment: NONE. Approval of MDD v1r1 closes this risk.
- Risk Mitigation:
  - None
- Open Actions:
  - None

---
-

**RISK # 7 – The design documentation is insufficient to describe how to write the product processing code or to ensure that the code will make products that meet project requirements.**

- Risk History: Identified in the CDRR as a MEDIUM risk
- Risk Assessment: NONE. Approval of SDD v1r1 closes this risk.
- Risk Mitigation:
  - None
- Open Actions:
  - None

---
-

**RISK # 8 – Requirements are not completely allocated to system components and product components**

- Risk History: Identified in the CDRR as a HIGH risk. Reduced to MEDIUM risk in the TRRR, as RAD v1r0 demonstrated that most customer needs and expectations had been allocated to system and product components.
- Risk Assessment: LOW (Impact = LOW, Likelihood = LOW). RAD v1r1 has added the documentation of additional requirements and requirements allocation, thereby reducing this risk. The risk can be closed upon completion of two associated actions that remain open.
- Risk Mitigation:
  - Make the RAD consistent with the UTP and the PBR.
  - Review and approve a revised RAD (v1r2)
- Open Actions:
  - TRR 4.4.1.2
  - TRR 4.9.1.4

---
-

**RISK # 9 – Changes to the project baseline are not controlled**

- Risk History: Identified in the CDRR as a MEDIUM risk. TRRR kept it as a MEDIUM risk, as there were inconsistencies between the PBR and other project artifacts and there was a desire to place the pre-operational system under Revision Control System (RCS) control.
- Risk Assessment: LOW (Impact = LOW, Likelihood = LOW). Delivery of the PPS to operations greatly reduces this risk.
- Risk Mitigation:
  - Maintain a project baseline under configuration management (CM).
  - Produce a PBR that identifies each configuration item in the project baseline and documents its change history and the CM tools used to control changes to the project baseline.
  - Review the PBR at the SRR.
- Open Actions:
  - TRR 1.7.13.1
  - TRR 4.4.1.2

---
-

**RISK # 10 – Project requirements and products are not adequately verified and validated**

- Risk History: Identified in the CDRR as a HIGH risk. Reduced to a MEDIUM risk in the TRRR, due to the development of a sound unit test plan (UTP).
- Risk Assessment: LOW (Impact = LOW, Likelihood = LOW). Completion of twelve associated actions after TRR has further reduced this risk. Six associated actions remain open.
- Risk Mitigation:
  - Make and approve revisions to the UTP and TRD
  - Add manual inspection of swath and grid images to the test sequence for the Global Grids unit.
  - At the SRR, confirm that the VVR and SRD describe the predicted algorithm performance and quality of the products derived from analysis and tests with simulated and/or proxy test data.
  - Identify performance risks in the VVR. Review performance risks at the SRR.
  - Add the system test data to the delivered PPS.
- Open Actions:
  - TRR 1.7.10.1
  - TRR 4.9.1.4
  - TRR 4.9.1.5
  - TRR 4.10.1.1
  - TRR 4.10.1.3
  - SRR 2.5.14.1

---
-

**RISK # 11 – Operator needs are not adequately validated**

- Risk History: Identified in the CDRR as a HIGH risk
- Risk Assessment: LOW (Impact = LOW, Likelihood = LOW). Two actions remain.
- Risk Mitigation:
  - None

- Open Actions:
  - SRR 2.6.12.1

---
-

**RISK # 12 – User needs are not adequately validated**

- Risk History: Identified in the CDRR as a HIGH risk
- Risk Assessment: NONE. Approval of UM v1r1 closes this risk.
- Risk Mitigation:
  - None
- Open Actions:
  - None

---
-

**RISK # 13 – Project risks are not properly reviewed and mitigated**

- Risk History: Identified in the CDRR as a HIGH risk
- Risk Assessment: LOW (Impact = LOW, Likelihood = LOW). The TRR has begun a proper process of risk review and mitigation, thereby greatly reducing this risk. The risk has been further reduced by SRR review of risks and mitigating actions. A residual LOW risk remains, as some risk mitigation actions remain open.
- Risk Mitigation:
  - Continue to track risks and actions after the SRR
- Open Actions:
  - SRR 7.2.1.1

---
-

**RISK # 14 – Calibration or geolocation errors in the IASI data that are not in the QC flags.**

- Risk History: Identified after the CDR as a HIGH risk. Reduced to MEDIUM risk, due to the demonstration, at TRR, that an extensive validation system has been developed.

- Risk Assessment: NONE. Documentation of the validation system in VVR v1r0 closes this risk.
- Risk Mitigation:
  - None
- Open Actions:
  - None

---
-

**RISK # 15 – STAR EPL pathfinder project activities introduce schedule risk**

- Risk History: Identified after the CDR as a HIGH risk. Reduce to MEDIUM by TRR approval of a project plan that included pathfinder tasks.
- Risk Assessment: NONE. Approval of the updated project plan presented at SRR closes this risk.
- Risk Mitigation:
  - None
- Open Actions:
  - None

---
-

**RISK # 17 – Possibility of a large backlog of processing**

- Risk History: Identified after the CDR as a HIGH risk
- Risk Assessment: NONE. Latency requirements have been documented in RAD v1r1. Strategy for backups is integrated into the system architecture. No operator actions are required. This is documented in the OM.
- Risk Mitigation:
  - None
- Open Actions:
  - None

---
-

**RISK # 18 – Problems with transition to operations due to a lack of personnel on the operations side**

- Risk History: Identified after the CDR as a HIGH risk. Reduced to MEDIUM at TRR, as OSDPD contacts became involved through participation in meetings and reviews.
- Risk Assessment: LOW (Impact = LOW, Likelihood = LOW). Complete participation by OSDPD reduces this risk. One associated action is kept open to ensure communication between the IASI development team and operations personnel until transition to operations has been completed.
- Risk Mitigation:
  - Operational technical contacts meet regularly with the IASI Development team until transition to operations has been completed.
- Open Actions:
  - TRR 1.3.3.1

---

**RISK # 20 – No confirmed date for briefing to SPSRB**

- Risk History: Identified after the CDR as a HIGH risk. Reduced to MEDIUM at TRR with a plan to arrange the briefing for Sept 19.
- Risk Assessment: NONE. A Sept. 21 date has been confirmed.
- Risk Mitigation:
  - None
- Open Actions:
  - None

---

**RISK # 21 – Possibility that the EUMETSAT data are not available for operations**

- Risk History: Identified after the CDR as a MEDIUM risk
- Risk Assessment: NONE. The OM documents the procedure to handle EUMETSAT data unavailability.
- Risk Mitigation:

- None
- Open Actions:
  - None

---
-

**RISK # 23 – Instrument quality degradation**

- Risk History: Identified after the CDR as a MEDIUM risk
- Risk Assessment: NONE. Contacts between NOAA and EUMETSAT are established and will be maintained.
- Risk Mitigation:
  - None
- Open Actions:
  - None

---
-

**RISK # 25 – Possibility of unexpected changes in the input data formats we received from EUMETSAT (L1C), NOAA/OSDPD (L1B), or NOAA/NCEP (GFS forecasts)**

- Risk History: Identified after the CDR as a MEDIUM risk
- Risk Assessment: NONE. Contacts between NOAA and EUMETSAT are established and will be maintained.
- Risk Mitigation:
  - None
- Open Actions:
  - None

---
-

**RISK # 31 – The scheduler for the IASI subsetting and distribution system is not established**

- Risk History: Identified after the CDR as a MEDIUM risk
- Risk Assessment: NONE. Approval of VVR v1r1 closes this risk.

- Risk Mitigation:
  - None
- Open Actions:
  - None

---
-

**RISK # 32 – Unit test results have not been reviewed and approved**

- Risk History: Identified at the SRR as a HIGH risk
- Risk Assessment: NONE. Approval of VVR v1r1 closes this risk.
- Risk Mitigation:
  - None
- Open Actions:
  - None

---
-

**RISK # 33 – A system test plan has not been reviewed and approved**

- Risk History: Identified at the SRR as a HIGH risk
- Risk Assessment: NONE. Approval of VVR v1r1 closes this risk.
- Risk Mitigation:
  - None
- Open Actions:
  - None

---
-

**RISK # 34 – Operations test environment is not available for system test**

- Risk History: Identified at the SRR as a MEDIUM risk
- Risk Assessment: NONE. Operations test environment availability was obtained.
- Risk Mitigation:

        - None
    - Open Actions:
        - None

---
-

**RISK # 35 – DDS lacks the disk space and bandwidth to be able to accept or distribute BUFR files and global grid files**

- Risk History: Identified at the SRR as a HIGH risk
- Risk Assessment: HIGH (Impact = HIGH, Likelihood = MEDIUM).
- Risk Mitigation:
    - Resolve at the PGD level
- Open Actions:
    - None. This risk is assigned to OSDPD.

---
-

- **RISK # 36 – File transfer protocol for monitoring log files has not been established**
    - Risk History: Identified at the SRR as a LOW risk
    - Risk Assessment: NONE. Approval of VVR v1r1 closes this risk.
    - Risk Mitigation:
        - None
    - Open Actions:
        - None

---
-

## 3. SRR ACTIONS

This section itemizes and reports on the actions recommended to mitigate the risks that were identified in Section 2 of this SRRR.

### 3.1 Completed TRR Actions

Actions are completed because the closure criteria have been met or because they have been determined to be not applicable to the IASI L1CT Development Team.

The following 49 actions from the TRR can be closed or withdrawn.

---

**ACTION: CDR 1.7.9.2 - Review and approve the algorithm theoretical basis at the System Readiness Review (SRR).**

- Closure Criteria
  - SRR approval of the algorithm theoretical basis as documented in the VVR and referenced documents
- Status: **Closed**

---

**ACTION: CDR 1.7.13.1 - Write an Interface Control Document (ICD) for the IASI L1CT project, following STAR EPL standards.**

- Closure Criteria
  - An ICD that describes all external input and output datasets at the detailed design level, including details on data format/type, range of values and special error values, is in the project baseline
- Closure Plan
  - Write an ICD that describes all external input and output datasets at the detailed design level, including details on data format/type, range of values and special error values
  - In the ICD, document or refer to all agreements with data suppliers and data users. In particular, add references to the “Producer-Archive

Submission Agreement for IASI Products" and the MOU between EUMETSAT and NOAA
    - Place the ICD and references in the project artifact repository
- Status: **Closed.** ICD v1.1 provides the needed information.

---

**ACTION: CDR 1.7.13.2 - Confirm that the ICD describes all external input and output datasets at the detailed design level, including details on data format/type, range of values and special error values.**

- Closure Criteria
    - SRR approval of the ICD
- Status: **Closed.** ICD v1r1 is approved.

---

**ACTION: CDR 1.7.13.3 - Address external interfaces risks and actions at the SRR.**

- Closure Criteria
    - SRR disposition of external interfaces risks and actions
- Status: **Closed.**

---

**ACTION: CDR 1.7.17.1 - Produce an IASI L1CT Metadata Document (MDD) for review at SRR, following STAR EPL standards.**

- Closure Criteria
    - An MDD that describes the FGDC metadata for each archived product and demonstrates how the FGDC metadata design meets the requirements for FGDC metadata is in the project baseline
    - The MDD describes collection level and granule level metadata
- Status: **Closed.** MDD v1.1 provides the needed information.

---

**ACTION: CDR 1.7.17.2 - Confirm that the MDD describes the Federal Geographic Data Committee (FGDC) metadata for each archived product and demonstrates how the FGDC metadata design meets the requirements for FGDC metadata.**

- Closure Criteria
  - SRR approval of the MDD
- Status: **Closed.** MDD v1r1 is approved.

---

**ACTION: CDR 1.7.17.3 - Address metadata risks and actions at the SRR.**

- Closure Criteria
  - SRR disposition of SRR metadata risks and actions
- Status: **Closed**

---

**ACTION: CDR 1.7.19.1 - Produce a System Description Document (SDD) for review at the SRR.**

- Closure Criteria
  - An SDD that fully defines the structure and capabilities of the software product components at the Unit Level and the Sub-Unit level, and fully describes all Look-Up Tables (LUTs), parameter files, system control files, input/intermediate/output data files, and ancillary data files, in the project baseline.
- Closure Plan
  - Modify the SDD to satisfy SRR reviewer comments provided in “IASI SDD Review Comments.doc”
- Status: **Closed.**

---

**ACTION: CDR 1.7.19.2 – Review and approve the system description at the SRR.**

- Closure Criteria
  - SRR approval of the system description

- Closure Plan
  - In the SRD, describe the SDD and provide a pointer to the SDD.
  - Distribute the SDD and SRD to the SRR reviewers
  - Confirm that the SDD fully defines the structure and capabilities of the software product components at the Unit Level and the Sub-Unit level
  - Confirm that the SDD fully describes all LUTs, parameter files, system control files, input/intermediate/output data files, and ancillary data files in the algorithm design
  - Confirm that the SDD lists and describes all software elements of the product processing system
- Status: **Closed.**

---

**ACTION: CDR 1.7.21.6 - Address system verification and validation risks and actions at the SRR.**

- Closure Criteria
  - SRR disposition of system verification and validation risks and actions
- Status
  - **Closed.**

---

**ACTION: CDR 5.12.1.1 - Document the predicted algorithm performance and quality of the products for review at the SRR.**

- Closure Criteria
  - A VVR that demonstrates, based on the results from unit testing and system testing, that the product system will satisfy product quality requirements, with reference to the RAD, is in the project baseline.
- Status
  - **Closed.**

---

**ACTION: CDR 5.12.1.2 - Review and approve the predicted algorithm performance and quality of the products at the SRR.**

- Closure Criteria
  - SRR approval of the predicted algorithm performance and quality of the products
- Status
  - **Closed.**

---

**ACTION: CDR 5.12.1.3 - Address algorithm performance and product quality risks and actions at the SRR.**

- Closure Criteria
  - SRR disposition of algorithm performance and product quality risks and actions
- Status
  - **Closed.**

---

**ACTION: CDR 8.4.3.1 - Identify and confirm Operations and Maintenance (O&M) needs to be validated.**

- Closure Criteria
  - A VVR that identifies O&M needs is in the project baseline
  - An OM that identifies the tools and training available for O&M is in the project baseline
  - SRR approval of the VVR and the OM
- Closure Plan
  - Identify O&M needs, including standard operation procedures. Document in the VVR.
  - Identify the tools and training available for O&M. Document in the OM.
  - Place the VVR and the OM in the project baseline
  - Review the VVR and the OM. Approve or state required actions.
- Status
  - **Closed.**

---

**ACTION: CDR 8.4.3.2 - Address Operations and Maintenance (O&M) risks and actions at the SRR.**

- Closure Criteria
  - SRR disposition of O&M risks and actions
- Status
  - **Closed.**

---

**ACTION: CDR 8.4.4.1 - Develop and/or identify the tools and training available for Operations and Maintenance (O&M).**

- Closure Criteria
  - An OM that identifies the tools and training available for O&M is in the project baseline
- Closure Plan
  - Discuss operator needs at weekly meetings.
  - Document operator training needs in the VVR.
  - Write an OM that documents standard operation procedures, training and tools for monitoring.
  - Place the VVR and the OM in the project baseline
- Status
  - **Closed**

---

**ACTION: CDR 8.4.4.2 - Confirm that the tools and training available for O&M are satisfactory.**

- Closure Criteria
  - SRR approval of the tools and training available for O&M
- Status
  - **Closed**

---

**ACTION: CDR 8.4.6.2 - Address user needs risks and actions at the SRR.**

- Closure Criteria
  - SRR disposition of user needs risks and actions
- Status
  - **Closed.**

---

**ACTION: CDR 8.4.6.1 - Identify and confirm user needs to be validated.**

- Closure Criteria
  - A VVR that identifies user needs is in the project baseline
  - A UM that identifies the tools, training, and support services available to the user, and the procedure for delivering these to the intended users, is in the project baseline
  - SRR approval of the VVR and the UM
- Closure Plan
  - Identify user needs for tools, training, and support services. Document in the VVR.
  - Write a UM that identifies the tools, training, and support services available to the user, and the procedure for delivering these to the intended users.
  - Place the VVR and the UM in the project baseline
  - Review the VVR and the UM. Approve or state required actions.
- Status
  - **Closed.**

---

**ACTION: CDR 12.8 - Provide information on how long (number of CPUs) each processing step in the IASI subsetting and distribution system takes. Describe how data is processed; parallel verses sequential processing and processing of blind orbits and missing granules.**

- Closure Criteria

- Documentation of operational scenarios and run procedures in the operations documents.

- Closure Plan
  - Determine the CPU load and the processing sequence.
  - Include this information in Section 6 of the OM and Section 4 of the SDD.

- Status
  - **Closed**

---

-**ACTION: CDR 12.14 - Implement a validation system to check for geolocation and calibration errors.**

- Closure Criteria
  - An off-line validation system to check for geolocation and calibration errors is developed, tested, and implemented.

- Closure Plan
  - Include current IASI validation activities, including Chris Barnet's, in the system test
  - Execute geolocation and calibration error tests in the system test.
  - Document results in the VVR

- Status
  - **Closed**

---
-

**ACTION: CDR 12.15 – Determine pathfinder tasks so that the IASI L1CT schedule risk is acceptable.**

- Closure Criteria
  - A revised project plan that includes the selected pathfinder tasks is determined to have a low risk impact on the IASI L1CT schedule.

- Closure Plan

- Balance IASI recommended actions and schedule constraints to develop an updated plan and schedule of tasks leading up to IASI L1CT operations.
- Document the updated plan and schedule in a revised project plan.

o Status
- **Closed.**

---

**ACTION: CDR 12.18 – Clarify and specify latency requirements**

o Closure Criteria
- Specific latency requirements have been clarified with the customers and documented.

o Closure Plan
- Discuss latency requirement with customers.
- Clarify with the users how fresh the data can be. Will they accept data older than 3 hours? How much older is acceptable?
- Perhaps refine the requirement, using expected latency performance and customer needs as input data for analysis.
- Put clarified user needs into the RAD.
- Document the operations strategy for backlogs in the OM.

o Status
- **Closed**

---

**ACTION: TRR 0.1.1 – Finalize dates for the SRR and the SPSRB briefing**

o Closure Criteria
- Dates have been set for the SRR and the SPSRB briefing at least 2 weeks after the SRR.

o Closure Plan

- A.K. Sharma to arrange a Sept 19 briefing with SPSRB
- TRR Review Team to confirm an Aug 30 date for the SRR

o Status
- **Closed.**

---

**ACTION: TRR 0.2.1 - Document the IASI validation system in the Verification and Validation Report (VVR)**

o Closure Criteria
- The IASI validation system has been documented in the VVR

o Closure Plan
- Document the IASI validation system in the VVR

o Status
- **Closed**

---

**ACTION: TRR 0.3.1 – Monitor risks and actions after the TRR.**

o Closure Criteria
- Updated status of risks and actions is documented in the SRD for approval at the SRR

o Closure Plan
- Hold IASI team meetings on a regular basis
- Address the status of risks and actions at these meetings
- Update the status of risks and actions in the SRD for review at SRR.

o Status
- **Closed.**

---

**ACTION: TRR 0.4.2 – If appropriate, document the procedure to handle EUMETSAT data unavailability in the Operations Manual (OM)**

- Closure Criteria
  - The procedure to handle EUMETSAT data unavailability has been documented in the OM for review at the SRR
- Closure Plan
  - Document the procedure to handle EUMETSAT data unavailability in the OM
- Status
  - **Closed**

---

**ACTION: TRR 0.6.2 – Put in place a procedure to notify EUMETSAT and IASI users when instrument quality degradation is detected.**

- Closure Criteria
  - A procedure is in place to notify EUMETSAT and IASI users when instrument quality degradation is detected.
- Closure Plan
  - Establish a EUMETSAT contact
  - Establish user contacts
  - Work out with these contacts an instrument quality degradation notification procedure
- Status
  - **Withdrawn.** There will be no formal notification procedure, as there is no requirement for one. This matter will be handled through informal contacts between the IASI validation team, EUMETSAT, and the users.

---

**ACTION: TRR 0.6.3 – Document the instrument quality degradation validation and notification procedures**

- Closure Criteria
  - The capability to detect instrument quality degradation has been added to the IASI validation system.

- Closure Plan
  - Document the procedure for detecting instrument quality degradation in the VVR for review at SRR.
  - Document the instrument quality degradation notification procedure in the SMM and the UM
- Status
  - **Withdrawn.** There will be no formal notification procedure, as there is no requirement for one. This matter will be handled through informal contacts between the IASI validation team, EUMETSAT, and the users.

---

**ACTION: TRR 0.7.1 – Obtain an agreement with each data provider that ensures timely notification of data format changes**

- Closure Criteria
  - An agreement that ensures timely notification of data format changes is obtained with each data provider
- Status
  - **Withdrawn.** There will be no formal notification procedure, as there is no requirement for one. This matter will be handled through contacts between the IASI validation team, NCEP and EUMETSAT.

---

**ACTION: TRR 0.7.2 – In the Interface Control Document (ICD), document agreements with data providers that ensure timely notification of data format changes**

- Closure Criteria
  - Agreements with data providers that ensure timely notification of data format changes are documented in the ICD.
- Status
  - **Withdrawn.** There will be no formal notification procedure, as there is no requirement for one. This matter will be handled through informal contacts between the IASI validation team, EUMETSAT, and the users.

---
-

**ACTION: TRR 1.7.6.1 - Add test environment requirements to the RAD.**

- Closure Criteria
  - Confirmation that test environment requirements are sufficiently documented in RAD v1r1.
- Status
  - **Closed**

---

**ACTION: TRR 1.7.6.2 - Add resource requirements, for each sub system layer, to the RAD.**

- Closure Criteria
  - Confirmation that resource requirements for each sub system layer are sufficiently documented in RAD v1r1.
  -
- Status
  - **Closed**

---

**ACTION: TRR 1.7.6.3 - Allocate requirement 1.4 to main_iasi_level1c_subsetter.cpp**

- Closure Criteria
  - Confirmation that RAD v1r1 allocates requirement 1.4 to main_iasi_level1c_subsetter.cpp
- Status
  - **Closed**

---

**ACTION: TRR 1.7.6.4 - Add to the RAD a derived requirement that reprocessed granule files are processed by Check_L1C and overwrite the old file.**

- Closure Criteria

- Confirmation that RAD v1r1 includes a derived requirement that reprocessed granule files are processed by Check_L1C and overwrite the old file.

- Status
  - **Withdrawn.**

---

**ACTION: TRR 1.7.6.5 - Review and approve the project requirements allocation and the RAD at the SRR.**

- Closure Criteria
  - Confirmation that the project requirements, as documented in RAD v1r1 and presented at the SRR, are derived from customer needs and expectations

- Status
  - **Closed**

---

**ACTION: TRR 1.7.7.3 - Make clear how the Level 2 processing can be turned off.**

- Closure Criteria
  - All Level 2 scripts and programs are removed from the IASI L1CT PPS delivered to operations.

- Closure Plan
  - Remove all Level 2 scripts and programs from the IASI L1CT PPS
  - Re-deliver the PPS to operations, with all Level 2 code removed.

- Status: **Closed.**

---

**ACTION: TRR 1.7.7.4 – Subscribe to input data source distribution list (NCEP).**

- Closure Criteria
  - IASI Operations and Validation teams are on the NCEP distribution list.

- Status

- **Closed.** Individuals must subscribe. Messages have been sent to the appropriate individuals.

---

**ACTION: TRR 1.7.12.1 – Add test data and test sequences that will exercise the error handling functions. Document in UTP and TRD revision.**

- Closure Criteria
  - Test data and test sequences that will exercise the error handling functions have been added to the UTP and documented in UTP and TRD revisions.
- Closure Plan
  - Add test data and test sequences that will exercise the error handling functions.
  - Desirable to have input files with mixed good/bad data, to test whether good data are processed. Desirable to have a stress test, where a larger than usual number of files are in the GFT to test unit level resources.
  - Document in the VVR.
- Status
  - **Closed.**

---

**ACTION: TRR 1.7.12.2 – Include test data and truth data for all unit tests and system test in the VVR.**

- Closure Criteria
  - Confirmation that the VVR includes test data and truth data for all unit tests and system test
- Closure Plan
  - In the VVR, describe the test data and truth data for all unit tests and system test
  - Test data and truth data for all unit tests and system test should be delivered to Ops in the DAP. System level resource requirements should be documented for SRR.

- Status
  - **Closed.**

---

**ACTION: TRR 1.7.13.2 - Place the unit test configuration (on iasidev1) under RCS control.**

- Closure Criteria
  - Confirmation that the unit test configuration is on iasidev1 under RCS control.
- Closure Plan
  - Determine how changes to the system during O&M are made and controlled.
  - Add this information to the System Maintenance Manual (SMM).
- Status
  - **Withdrawn.** OSDPD will establish the operational baseline and control changes under RCS control. OSDPD may accept changes that are made on iasidev1 by modifying the operational baseline under RCS control.

---

**ACTION: TRR 4.5.1.1 - Place the EUMETSAT IASI Level 1 Product Format Specification (2004) and other relevant referenced documents in the project artifact repository**

- Closure Criteria
  - The EUMETSAT IASI Level 1 Product Format Specification (2004) and other relevant referenced documents in the project artifact repository
- Status
  - **Closed.**

---

**ACTION: TRR 4.9.1.1 - In the UTP, provide a table for the error codes and their corresponding descriptions.**

- Closure Criteria

- Confirmation that a table for the error codes and their corresponding descriptions has been provided in a revised UTP.

- Status
  - **Closed**

---

**ACTION: TRR 4.9.1.2 - Test error handling (e.g. interruption of ftp on GFT side). Stress test number of files processed (stress test resources).**

- Closure Criteria
  - Confirmation that the unit tests test error handling (e.g. interruption of ftp on GFT side).
  - Confirmation that the unit tests include a stress test of the number of files processed (stress test resources).

- Closure Plan
  - Document procedure for handling ftp interruptions in the OM.

- Status
  - **Closed.** Documented in OM v1r1 section 7.1.

---

**ACTION: TRR 4.9.1.3 - Add manual inspection of swath and grid images to the test sequence for the Global Grids unit.**

- Closure Criteria
  - Confirmation that the test sequence for the Global Grids unit includes spot checking to verify that the nearest neighbor is acquired.

- Closure Plan
  - Add spot checking to verify that the nearest neighbor is acquired to the system test
  - Document test results in the VVR.

- Status
  - **Closed**. Documented in VVR v1r1 section 5.2.1.3.

---

**ACTION: TRR 4.10.1.2 – Request DDS size increase. Specify IASI needs in the operations documents.**

- Closure Criteria
  - IASI resource requirements have been specified in the SDD and OM.
  - A DDS size increase has been made, based on the documented IASI resource requirements.
  - The OM includes a table of needed throughput for each user
- Status
  - **Closed.** OM v1r1 includes the requested information.

---

**ACTION: TRR 5.3.2.1 – Provide a POC for GFT.**

- Closure Criteria
  - A POC for GFT has been identified and documented in the OM.
- Closure Plan
  - Identify a POC for GFT.
  - Document GFT POC in the OM.
- Status
  - **Closed**

---

**ACTION: TRR 5.3.2.2 – Verify the Perl scripts scheduler**

- Closure Criteria
  - The scheduler has been verified in the System Test.
- Closure Plan
  - Test the crontab scheduler in the System Test
  - Report test results in the VVR.
- Status
  - **Closed.** Documented in VVR v1r1 section 5.2.2.

---

**ACTION: TRR 5.3.2.3 – Review and approve the Perl scripts scheduler at the SRR.**

- Closure Criteria
  - The Perl scripts scheduler has been reviewed and approved.
- Closure Plan
  - Review the results of the test of the Perl scripts scheduler, as documented in the VVR
  - Approve the Perl scripts scheduler or recommend actions
- Status
  - **Withdrawn.** Crontab is used for scheduling.

---

### 3.2 Open TRR Actions

There are 9 TRR actions that remain open.

---

**ACTION: CDR 1.7.9.1 - Document the algorithm theoretical basis.**

- Closure Criteria
  - A VVR that documents the algorithm theoretical basis is in the project baseline
  - All documents referenced in the VVR are in the project baseline.
- Closure Plan
  - Document the algorithm theoretical basis in the VVR, through reference to the Atmospheric Infrared Sounder (AIRS) ATBD and relevant EUMETSAT documents.
  - Principal component algorithm can use AIRS ATBD. Cut and paste instrument/calval info from other docs (EUMETSAT, e.g.). Put all of this in an Appendix to the VVR.
  - Make the VVR, the AIRS ATBD, and other relevant documents available to the TRR Review Team in the project artifact repository.

- Status**: Open.** Instrument/calval info from EUMETSAT to be added to the VVR appendix (or referenced in the VVR). Closure of this action is not required before commencement of operations.

---

**ACTION: TRR 1.3.3.1 - Meet with IASI Operations team on a regular basis.**

- Closure Criteria
  - Designated operational technical contacts meet regularly with the IASI Development team until transition to operations has been completed.
- Closure Plan
  - Include IASI Operations personnel in regular meetings of the IASI Development team (ideally weekly meetings) leading up to SRR.
  - Develop a plan and schedule for contacts between the Development team and Operations personnel after SRR.
- Status: **Open.** To be monitored weekly. Operations may commence while meetings are ongoing.

---

**ACTION: TRR 1.7.10.1 – Make and approve specific revisions to UTP v1r0**

- Closure Criteria
  - Confirmation that the UTP has been revised as indicated in the closure plan.
- Closure Plan
  - Add "IASI_Granule_Metadata_Template.xml" and "NRTTEST_CONFIG" files to UTP for Check L1C unit, as listed in TRD.
  - Revise UTP section headers 4.3.1 and 4.4.1 (change f90 to cpp)
  - Add requirements 4.2 and 5.6 to section 7.4 of the UTP.
  - In UTP Section 5, state what is the "truth" data for the Global Grids unit test and explain how GrADS will be used to compare output with "truth".
  - Review and approve these revisions prior to the end of unit testing. Document the approval in a TRR Report revision.

- Status
  - **Open.** Closure of this action is not required before commencement of operations.

---

**ACTION: TRR 1.7.13.1 - Revise the UTP and/or the PBR to correct inconsistencies.**

- Closure Criteria
  - EUMETSAT PFS L1C file is in the project baseline and documented in the PBR
  - Config files are correctly and consistently documented in the UTP and PBR.
- Status
  - **Open.** Closure of this action is not required before commencement of operations.

---

**ACTION: TRR 4.4.1.2 - Make the RAD, UTP and TRD consistent and correct. Make filenames in UTP, RAD and TRD consistent with PBR.**

- Closure Criteria
  - Confirmation that the RAD, UTP and TRD consistent and correct.
  - Confirmation that filenames in the UTP, RAD and TRD are consistent with the PBR.
- Status
  - **Open.** Closure of this action is not required before commencement of operations.

---

**ACTION: TRR 4.9.1.4 - Document allocation of requirements 2.0, 2.1, 2.2, 4.2 and 5.6 consistently in the RAD, UTP, and TRD.**

- Closure Criteria
  - Confirmation that the RAD, UTP, and TRD consistently document allocation of requirements 2.0, 2.1, 2.2, 4.2 and 5.6

- Status
  - **Open.** Low priority, not needed for commencement of operations.

---

**ACTION: TRR 4.9.1.5 - In the TRD, show how the Global Matchups unit test verifies that Requirements 4.2 and 5.6 are satisfied.**

- Closure Criteria
  - The TRD shows how the Global Matchups unit test verifies that Requirements 4.2 and 5.6 are satisfied.
- Status
  - **Open.** TRD revision has been made. Action can be closed upon approval of the revised TRD. Low priority, not needed for commencement of operations.

---

**ACTION: TRR 4.10.1.1 – Evaluate the risk of throwing out good data with mixed bad data. Add to TRD slide 72.**

- Closure Criteria
  - An evaluation of the risk of throwing out good data with mixed bad data has been added to TRD slide 72.
- Status
  - **Open.** Evaluation completed. There is no risk. TRD revision will be made after SRR but before SPSRB briefing. TRD revision has been made. Action can be closed upon approval of the revised TRD. Low priority, not needed for commencement of operations.

---

**ACTION: TRR 4.10.1.3 – Add a sub-bullet to TRD slide 148 3rd bullet, noting that spot checking is acceptable**

- Closure Criteria
  - Revision of TRD slide 148 to note that spot checking is acceptable.
- Status

- **Open.** TRD revision has been made. Action can be closed upon approval of the revised TRD. Low priority, not needed for commencement of operations.

---

### 3.3 New Actions

There are 15 new actions. Nine of these are completed, one is withdrawn, and five remain open.

---

**ACTION: SRR 0.1.1 – Document unit test results in SRR project artifacts**

- Closure Criteria
  - Unit test results are documented in SRR project artifacts
- Closure Plan
  - Report the results from unit tests in the VVR.
- Status:
  - **Closed.** VVR v1r1 includes the requested information.

---

**ACTION: SRR 0.1.2 – Review and approve unit test results at the SRR**

- Closure Criteria
  - SRR approval of the unit test results
- Closure Plan
  - Review and approve the unit test results that are reported in the VVR.
- Status:
  - **Closed.**

---

**ACTION: SRR 0.2.1 – Describe the system test in SRR project artifacts**

- Closure Criteria
  - The system test is described in SRR project artifacts
- Closure Plan
  - Describe the system test in the VVR.
- Status:
  - **Closed.** VVR v1r1 includes the requested information.

---

**ACTION: SRR 0.2.2 – Review and approve the system test at the SRR**

- Closure Criteria
  - SRR approval of the system test
- Closure Plan
  - Review and approve the system test that is described in the VVR.
- Status:
  - **Closed.**

---

**ACTION: SRR 0.3.1 – Establish connectivity from iasitest1 and iasiprod1 to GFT and DDS.**

- Closure Criteria
  - Connectivity from iasitest1 and iasiprod1 to GFT and DDS has been established
- Closure Plan
  - Write a CCR
  - Connectivity established by Russ Lancaster
- Status:
  - **Closed.**

---

**ACTION: SRR 0.4.1 – Write an ftp script to transfer METOP instrument Level 2 products (temperature and moisture profiles) in BUFR format to the Shared Processing Network (SPN)**

- Closure Criteria
  - The ftp script is added to the IASI L1CT product processing system code and documented in the operations documents
- Status:
  - **Withdrawn.** This script cannot be used until the Level 2 products are available. It will be written for a future release.

---

**ACTION: SRR 0.5.1 – Write a script to do the file transfer to Balmy**

- Closure Criteria
  - A script to do the file transfer to Balmy has been written and tested
- Closure Plan
  - Obtain connectivity to Balmy
  - Obtain file transfer protocol
  - Write and test the script
- Status:
  - **Closed.**

---

**ACTION: SRR 2.5.6.1 – Place the Project Plan file in the IASI artifact repository.**

- Closure Criteria
  - The Project Plan file is in the IASI artifact repository.
- Status:
  - **Closed.**

---

**ACTION: SRR 2.6.12.2 – Send fatal error messages to personal email address.**

- Closure Criteria

- Fatal error messages are sent to personal email instead of system mail

- Closure Plan
  - Modify scripts to send fatal error messages to personal email
  - Place the desired email addresses into the config file
  - Verify that fatal error messages are sent to the desired addresses
  - Document in the OM

- Status:
  - **Closed.** Documented in OM v1r1 section 6.2.4.

---

**ACTION: SRR 3.2.1.1 – Change time tag of input data files to show the granule start/end time instead of the orbit start/end time.**

- Closure Criteria
  - The time tag of input data files shows the granule times

- Closure Plan
  - Modify scripts to replace the orbital times with the granule times for input data files
  - Verify that the time tags show the granule times
  - Document in the VVR and the OM

- Status:
  - **Closed.**

---

**ACTION: SRR 2.5.14.1 – Add the static system test data to the delivered PPS.**

- Closure Criteria
  - The PPS delivered to operations includes the static system test data.

- Closure Plan
  - Write a CCR to transfer from iasidev to iasitest.
  - Upon approval, make the transfer

- Status:

- **Open.** Closure of this action is not required before commencement of operations.

---

**ACTION: SRR 2.6.12.1 – Provide the tools for science validation to OSDPD.**

- Closure Criteria
  - The tools for science validation have been provided to OSDPD
  - Resource requirements for these tools have been documented.
- Status:
  - **Open.** Closure of this action is not required before commencement of operations.

---

**ACTION: SRR 4.5.1.1 – Fill out delivery procedure template.**

- Closure Criteria
  - Delivery procedure template has been filled out and delivered to OSDPD.
- Closure Plan
  - Fill out OSDPD's delivery procedure template
  - Deliver filled out template to OSDPD
- Status:
  - **Closed.**

---

**ACTION: SRR 4.6.1.1 – Remove references to OPUS monitoring from the SRD and UTP**

- Closure Criteria
  - The SRD and UTP do no refer to OPUS monitoring
- Status:
  - **Open.** Closure of this action is not required before commencement of operations.

---

**ACTION: SRR 7.2.1.1 – Continue to track risks and actions after the SRR**

- Closure Criteria
  - All risks are closed.
- Status:
  - **Open.** Operations may commence while tracking of risks and actions is ongoing.

---

## 4. SRR EXIT CRITERIA

This section itemizes and reports on the SRR exit criteria.

The SRR exit criteria have been tailored from the STAR EPL standard SRR exit criteria.

- Exit # 1 - TRR "Conditional Pass" items have been satisfactorily disposed of.
  - STATUS: PASS
- Exit # 2 - TRR "Defer" items have been satisfactorily disposed of.
  - STATUS: PASS
- Exit # 3 - The Project Plan is satisfactory
  - STATUS: PASS
- Exit # 4 - The requirements allocation and RAD are satisfactory
  - STATUS: CONDITIONAL PASS.
    - Actions TRR 4.4.1.2 and TRR 4.9.1.4 must be closed. These are low priority actions. Closure is not needed for commencement of operations.
- Exit # 5 - External interfaces and ICD are satisfactory.
  - STATUS: PASS
- Exit # 6 - The system description and SDD are satisfactory.
  - STATUS: PASS
- Exit # 7 - The metadata and MDD are satisfactory.
  - STATUS: PASS
- Exit # 8 - The operations procedures, training, tools, and documentation are satisfactory.

- STATUS: CONDITIONAL PASS.
  - Action SRR 2.6.12.1 must be closed. Closure is not needed for commencement of operations.

- Exit # 9 - The system maintenance procedures and documentation are satisfactory.
  - STATUS: PASS

- Exit # 10 - The delivery procedures, tools, training, support services, and documentation available to the users are satisfactory.
  - STATUS: PASS

- Exit # 11 - System test results and VVR are satisfactory.
  - STATUS: PASS

- Exit # 12 - The project baseline and PBR are satisfactory.
  - STATUS: CONDITIONAL PASS
    - Action TRR 4.4.1.2 must be closed. This is a low priority action. Closure is not needed for commencement of operations.

- Exit # 13 - The SRRR documents updated status of project risks and actions. The risk status is acceptable for commencement of operations.
  - STATUS: PASS

- Exit # 14 - The integrated product processing system is ready for installation in the operations environment.
  - STATUS: PASS

## APPENDIX A – SRR CHECKLIST DISPOSITION

A completed checklist for the IASI L1CT SRR is shown as Table A.1

### Table A.1 – IASI L1CT SRR checklist disposition

| CLI # | Check List Item (CLI) | Disposition | Risk | Action (Y/N) | Comments |
|---|---|---|---|---|---|
| 1.0 | Introduction | | | | |
| 1.1.1 | Project objectives are derived from customer needs and expectations. | PASS | None | N | |
| 1.2.1 | Project stakeholder roles have been identified. | PASS | None | N | |
| 1.2.2 | Project stakeholder personnel have been identified. | PASS | None | N | |
| 1.2.3 | Project stakeholder tasks have been adequately described. | PASS | None | N | |
| 1.3.1 | The description of the project plan includes tasks, resources and schedule of milestones. | PASS | None | N | |
| 1.3.2 | Modifications to the project plan since Test Readiness Review (TRR) are clearly explained, including the rationale and documentation of management concurrence. | PASS | None | N | |
| 1.3.3 | Stakeholders are involved in the project as expected. | WAIVE | Low | N | Late OSDPD involvement in the project added risk. This risk has been greatly reduced by OSDPD involvement in TRR and SRR, and by regular meetings between IASI Development and Operations teams that were begun in May 2007. |
| 1.4.1 | The System Readiness Document (SRD) provides pointers to the SRR Peer Review Guidelines (PRG-14.1) and SRR Checklist (CL-14.1). | PASS | None | N | |
| 1.5.1 | The SRD provides a pointer to the SRR Report Document Guidelines (DG-14.6). | PASS | None | N | |
| 1.6.1 | The SRR review objectives, as stated in the SRD, are satisfactory. | PASS | None | N | |
| 2.0 | Test Readiness Review Report | | | | |
| 2.1.1 | The SRD provides a pointer to the Test Readiness Review Report (TRRR) | PASS | None | N | |
| 2.1.2 | The SRD explains the purposes of the TRRR | PASS | None | N | |
| 2.2.1 | The SRD summarizes the status of check list items (CLIs) from the TRR. | PASS | None | N | |
| 2.2.2 | The SRD provides a rationale and risk assessment for TRR "Waive" items | PASS | None | N | |
| 2.3.1 | The SRD summarizes the status of TRR exit criteria. | PASS | None | N | |
| 2.4.1 | The SRD states the number of open risks and actions from the TRRR | PASS | None | N | |

| CLI # | Check List Item (CLI) | Disposition | Risk | Action (Y/N) | Comments |
|---|---|---|---|---|---|
| **2.0** | **Test Readiness Review Report** | | | | |
| 2.5.1 | SRR entry criteria are listed completely and correctly in the SRD. | PASS | **None** | **N** | |
| 2.5.2 | The SRD provides a satisfactory description of tailored SRR entry criteria | PASS | **None** | **N** | |
| 2.5.3 | The SRD provides a satisfactory description of waived SRR entry criteria | PASS | **None** | **N** | |
| 2.5.4 | Deviations from SRR entry criteria that were established at TRR are approved and documented in the System Readiness Review Report (SRRR). | PASS | **None** | **N** | |
| 2.5.5 | Entry # 1 - A Test Readiness Review Report (TRRR) has been written. The SRR reviewers have access to the approved version of the TRRR. | PASS | **None** | **N** | |
| 2.5.6 | Entry # 2 - High level tasks and project milestones have been documented in a Microsoft Project file. The SRR reviewers have access to the approved version of the project file. | PASS | **None** | **N** | |
| 2.5.7 | Entry # 3 - A revised Requirements Allocation Document (RAD v1r1) has been written. The SRR reviewers have access to the approved version of the RAD v1r1. Open actions on the requirements allocation have been documented in the TRRR. | PASS | **None** | **N** | |
| 2.5.8 | Entry # 4 - An Interface Control Document (ICD v1r0) has been written. The SRR reviewers have access to the approved version of the ICD. Open actions on the external interfaces have been documented in the TRRR. | PASS | **None** | **N** | |
| 2.5.9 | Entry # 5 - A System Description Document (SDD v1r0) has been written. The SRR reviewers have access to the approved version of the SDD. Open actions on the system description have been documented in the TRRR. | PASS | **None** | **N** | |
| 2.5.10 | Entry # 6 - A Metadata Document (MDD v1r0) has been written. The SRR reviewers have access to the approved version of the MDD. Open actions on the metadata description have been documented in the TRRR. | PASS | **None** | **N** | |
| 2.5.11 | Entry # 7 - An Operations Manual (OM v1r0) has been written. The SRR reviewers have access to the approved version of the OM. Open actions on the operations documentation have been documented in the TRRR. | PASS | **None** | **N** | |
| 2.5.12 | Entry # 8 - A System Maintenance Manual (SMM v1r0) has been written. The SRR reviewers have access to the approved version of the SMM. Open actions on the maintenance documentation have been documented in the TRRR. | PASS | **None** | **N** | |
| 2.5.13 | Entry # 9 - A Users Manual (UM v1r0) has been written. The SRR reviewers have access to the approved version of the UM. Open actions on the users documentation have been documented in the TRRR. | PASS | **None** | **N** | |
| 2.5.14 | Entry # 10 - Pre-operational code units, external interfaces, ancillary data, and system test data have been integrated into a product processing system in the operational test environment. The SRR reviewers have access to the product processing system. O | CONDITIONAL PASS | **Low** | **Y** | Missing system test data.<br><br>**NEW ACTION SRR 2.5.14.1 - Add the static system test data to the delivered PPS.** |
| 2.5.15 | Entry # 11 - A Verification and Validation Report (VVR v1r0) has been written. The TRR reviewers have access to the approved version of the VVR. Open actions on verification and validation have been documented in the TRRR. | PASS | **None** | **N** | |
| 2.5.16 | Entry # 12 - A Project Baseline Report (PBR v2r0) has been written. The TRR reviewers have access to the approved version of PBR v2r0. | PASS | **None** | **N** | |
| 2.5.17 | Entry # 13 - A System Readiness Document (SRD) has been written. SRR review objectives are clearly stated in the SRD. Deviations from the STAR EPL standard objectives for an SRR have been approved. | PASS | **None** | **N** | |

| CLI # | Check List Item (CLI) | Disposition | Risk | Action (Y/N) | Comments |
|---|---|---|---|---|---|
| 2.0 | Test Readiness Review Report | | | | |
| 2.6.1 | SRR exit criteria are listed completely and correctly in the SRD. | PASS | None | N | |
| 2.6.2 | The SRD provides a satisfactory description of tailored SRR exit criteria | PASS | None | N | |
| 2.6.3 | The SRD provides a satisfactory description of waived SRR exit criteria | PASS | None | N | |
| 2.6.4 | Deviations from the SRR exit criteria that were established at TRR are approved and documented in the SRRR. | N/A | None | N | There are no deviations. |
| 2.6.5 | Exit # 1 - TRR "Conditional Pass" items have been satisfactorily disposed of. | PASS | None | N | |
| 2.6.6 | Exit # 2 - TRR "Defer" items have been satisfactorily disposed of. | PASS | None | N | |
| 2.6.7 | Exit # 3 - The Project Plan is satisfactory | PASS | None | N | |
| 2.6.8 | Exit # 4 - The requirements allocation and RAD are satisfactory. | CONDITIONAL PASS | Low | Y | ACTIONS TRR 4.4.1.2, TRR 4.9.1.4 |
| 2.6.9 | Exit # 5 - The external interfaces and ICD are satisfactory. | PASS | None | N | |
| 2.6.10 | Exit # 6 - The system description and SDD are satisfactory. | PASS | None | N | |
| 2.6.11 | Exit # 7 - The metadata and MDD are satisfactory. | PASS | None | N | |
| 2.6.12 | Exit # 8 - The operations procedures, training, tools, and documentation are satisfactory. | CONDITIONAL PASS | Low | Y | **NEW ACTION SRR 2.6.12.1 - Provide the tools for science validation to OSDPD.** |
| 2.6.13 | Exit # 9 - The system maintenance procedures and documentation are satisfactory. | PASS | None | N | |
| 2.6.14 | Exit # 10 - The delivery procedures, tools, training, support services, and documentation available to the users are satisfactory. | PASS | None | N | |
| 2.6.15 | Exit # 11 - System test results and VVR are satisfactory. | PASS | None | N | |
| 2.6.16 | Exit # 12 - The project baseline and PBR are satisfactory. | CONDITIONAL PASS | Low | Y | ACTION TRR 4.4.1.2 |
| 2.6.17 | Exit # 13 - The SRRR documents updated status of project risks and actions. The risk status is acceptable for commencement of operations. | PASS | None | N | |
| 2.6.18 | Exit # 14 - The integrated product processing system is ready for installation in the operations environment. | PASS | None | N | |

| CLI # | Check List Item (CLI) | Disposition | Risk | Action (Y/N) | Comments |
|---|---|---|---|---|---|
| 3.0 | System Requirements | | | | |
| 3.1.1 | User needs and expectations are adequately and consistently described in the SRD and other project artifacts | PASS | None | N | |
| 3.2.1 | The SRD describes a timeline scenario for the product that balances customer needs and expectations with operational constraints | PASS | None | N | The lack of an operations concept (ConOps) is a weakness. Risk is greatly mitigated by extensive communication with users and supply of test products to them. |
| 3.3.1 | The SRD provides an overview of the RAD and a pointer to the RAD | PASS | None | N | |
| 3.4.1 | The SRD describes new requirements since TRR. New requirements are approved. | PASS | None | N | |
| 3.4.2 | The SRD describes requirements changes since TRR. Requirements changes are approved. | PASS | None | N | |
| 3.4.3 | The SRD describes requirements allocation changes since TRR. Requirements allocation changes are approved. | PASS | None | N | |
| 4.0 | System Description | | | | |
| 4.1.1 | The SRD describes the purpose of the System Description Document (SDD), Interface Control Document (ICD) and Metadata Document (MDD) | PASS | None | N | |
| 4.1.2 | The SRD provides pointers to the SDD, ICD, and MDD | PASS | None | N | |
| 4.2.1 | The SRD identifies On-Line and Off-Line subsystems | PASS | None | N | |
| 4.2.2 | The SRD identifies the major functional subsystems | WAIVE | None | N | Units are described rather than subsystems, so a system architecture layer has been omitted. This reflects the history of the system architecture development, which did not follow standards. Risk is to optimization of design. This risk is greatly reduced, |
| 4.2.3 | The SRD illustrates the flows between subsystems | WAIVE | None | N | See CLI 4.2.2 |
| 4.3.1 | The SRD lists the requirements for the Ingest subsystem, consistent with the RAD. | WAIVE | None | N | Requirements are listed for units, not subsystems. This reflects the history of the system architecture development, which did not follow standards. Risk is to optimization of design. This risk is greatly reduced, because the design has been optimized thr |
| 4.3.2 | The SRD lists and describes the hardware and software components of the Ingest subsystem, consistent with the SDD, ICD, and MDD. | WAIVE | None | N | Hardware components are described, but not distributed to subsystems. This reflects the history of the system architecture development, which did not follow standards. Risk is to optimization of design. This risk is greatly reduced, because the design ha |
| 4.4.1 | The SRD lists the requirements for the Production subsystem, consistent with the RAD. | WAIVE | None | N | See comments for CLI 4.3.1. |
| 4.4.2 | The SRD lists and describes the hardware and software components of the Production subsystem, consistent with the SDD, ICD, and MDD. | WAIVE | None | N | See comments for CLI 4.3.2. |
| 4.4.3 | The SRD describes the operational sequence, consistent with the SDD. | PASS | None | N | |
| 4.4.4 | The SRD describes the operational production environment, consistent with the SDD. | PASS | None | N | |
| 4.5.1 | The SRD lists the requirements for the Delivery subsystem, consistent with the RAD. | PASS | None | N | |

| CLI # | Check List Item (CLI) | Disposition | Risk | Action (Y/N) | Comments |
|---|---|---|---|---|---|
| 4.0 | System Description | | | | |
| 4.5.2 | The SRD lists and describes the hardware and software components of the Delivery subsystem, consistent with the SDD, ICD, and MDD. | WAIVE | None | N | See comments for CLI 4.3.1. |
| 4.6.1 | The SRD lists the requirements for the Monitoring subsystem, consistent with the RAD. | CONDITIONAL PASS | Low | Y | See comments for CLI 4.3.1. Also: Changes for operational monitoring require SRD modifications (e.g., no reference to OPUS)<br>**NEW ACTION SRR 4.6.1.1 - Remove references to OPUS monitoring in SRD and UTP.** |
| 4.6.2 | The SRD lists and describes the hardware and software components of the Monitoring subsystem, consistent with the SDD, ICD, and MDD. | WAIVE | None | N | See comments for CLI 4.3.1 |
| 4.7.1 | The SRD lists the requirements for the Validation subsystem, consistent with the RAD. | WAIVE | None | N | See comments for CLI 4.3.1. |
| 4.7.2 | The SRD lists and describes the hardware and software components of the Validation subsystem, consistent with the SDD, ICD, and MDD. | WAIVE | None | N | See comments for CLI 4.3.2. |
| 4.8.1 | The SRD lists the requirements for the Maintenance subsystem, consistent with the RAD. | WAIVE | None | N | See comments for CLI 4.3.1. |
| 4.8.2 | The SRD lists and describes the hardware and software components of the Maintenance subsystem, consistent with the SDD, ICD, and MDD. | WAIVE | None | N | See comments for CLI 4.3.2. |
| 4.9.1 | The SRD provides a pointer to the Project Baseline Report (PBR). | PASS | None | N | |
| 5.0 | System Readiness | | | | |
| 5.2.1 | The SRD explains the concepts of verification and validation | PASS | None | N | |
| 5.2.2 | The SRD provides a pointer to the project Verification and Validation Report (VVR) | PASS | None | N | |
| 5.3.1 | The SRD lists the product users and the product components to be delivered to each user, consistent with the RAD. | PASS | None | N | |
| 5.3.2 | The SRD states the identified needs of each user, consistent with the RAD. | PASS | None | N | |
| 5.3.3 | System test results that validate each user need are consistently and satisfactorily presented in the SRD and the VVR | PASS | None | N | |
| 5.3.4 | The SRD describes the purpose and function of the Users Manual (UM) and provides a pointer to the project UM | PASS | None | N | |
| 5.4.1 | The SRD identifies the organization and personnel that will operate and maintain the operational product processing system | PASS | None | N | |
| 5.4.2 | The SRD states the identified operator needs, consistent with the RAD. | PASS | None | N | |
| 5.4.3 | System test results that validate each operator need are consistently and satisfactorily presented in the SRD and the VVR | PASS | None | N | |
| 5.4.4 | The SRD describes the purpose and function of the Operations Manual (OM) and provides a pointer to the project OM | PASS | None | N | |
| 5.4.5 | The SRD describes the purpose and function of the System Maintenance Manual (SMM) and provides a pointer to the project SMM | PASS | None | N | |

| CLI # | Check List Item (CLI) | Disposition | Risk | Action (Y/N) | Comments |
|---|---|---|---|---|---|
| 6.0 | Risks and Actions | | | | |
| 6.1.1 | The SRD correctly reports, in sufficient detail, the status of each risk identified in the TRR Report. | PASS | None | N | |
| | Risk # 2 | PASS | None | N | |
| | Actions associated with Risk # 2 | PASS | None | N | |
| | Risk # 3 | CONDITIONAL PASS | Low | N | |
| | Actions associated with Risk # 3 | CONDITIONAL PASS | Low | Y | ACTION TRR 1.3.3.1 |
| | Risk # 4 | PASS | None | N | |
| | Actions associated with Risk # 4 | PASS | None | N | |
| | Risk # 5 | PASS | None | N | |
| | Actions associated with Risk # 5 | PASS | None | N | |
| | Risk # 6 | PASS | None | N | |
| | Actions associated with Risk # 6 | PASS | None | N | |
| | Risk # 7 | PASS | None | N | |
| | Actions associated with Risk # 7 | PASS | None | N | |
| | Risk # 8 | CONDITIONAL PASS | Low | N | |
| | Actions associated with Risk # 8 | CONDITIONAL PASS | Low | Y | ACTIONS TRR 4.4.1.2, TRR 4.9.1.4 |
| | Risk # 9 | CONDITIONAL PASS | Low | N | |
| | Actions associated with Risk # 9 | CONDITIONAL PASS | Low | Y | ACTIONS TRR 1.7.13.1, TRR 4.4.1.2 |
| | Risk # 10 | CONDITIONAL PASS | Low | N | |
| | Actions associated with Risk # 10 | CONDITIONAL PASS | Low | Y | ACTIONS TRR 1.7.10.1, TRR 4.9.1.4, TRR 4.9.1.5, TRR 4.10.1.1, TRR 4.10.1.3, SRR 2.5.14.1 |
| | Risk # 11 | CONDITIONAL PASS | Low | N | |
| | Actions associated with Risk # 11 | CONDITIONAL PASS | Low | Y | ACTION SRR 2.6.12.1 |
| | Risk # 12 | PASS | None | N | |
| | Actions associated with Risk # 12 | PASS | None | N | |
| | Risk # 13 | CONDITIONAL PASS | Low | N | |
| | Actions associated with Risk # 13 | CONDITIONAL PASS | Low | Y | ACTION SRR 7.2.1.1 |

| CLI # | Check List Item (CLI) | Disposition | Risk | Action (Y/N) | Comments |
|---|---|---|---|---|---|
| 6.0 | Risks and Actions | | | | |
| | Risk # 14 | PASS | None | N | |
| | Actions associated with Risk # 14 | PASS | None | N | |
| | Risk # 15 | PASS | None | N | |
| | Actions associated with Risk # 15 | PASS | None | N | |
| | Risk # 17 | PASS | None | N | |
| | Actions associated with Risk # 17 | PASS | None | N | |
| | Risk # 18 | CONDITIONAL PASS | Low | N | |
| | Actions associated with Risk # 18 | CONDITIONAL PASS | Low | Y | ACTION TRR 1.3.3.1 |
| | Risk # 20 | PASS | None | N | |
| | Actions associated with Risk # 20 | PASS | None | N | |
| | Risk # 21 | PASS | None | N | |
| | Actions associated with Risk # 21 | PASS | None | N | |
| | Risk # 23 | PASS | None | N | |
| | Actions associated with Risk # 23 | PASS | None | N | |
| | Risk # 25 | PASS | None | N | |
| | Actions associated with Risk # 25 | PASS | None | N | |
| | Risk # 31 | PASS | None | N | |
| | Actions associated with Risk # 31 | PASS | None | N | |
| | Risk # 32 | PASS | None | N | |
| | Actions associated with Risk # 32 | PASS | None | N | |
| | Risk # 33 | PASS | None | N | |
| | Actions associated with Risk # 33 | PASS | None | N | |

| CLI # | Check List Item (CLI) | Disposition | Risk | Action (Y/N) | Comments |
|---|---|---|---|---|---|
| **6.0** | **Risks and Actions** | | | | |
| | Risk # 34 | PASS | **None** | **N** | |
| | Actions associated with Risk # 34 | PASS | **None** | **N** | |
| | Risk # 35 | N/A | **High** | **N** | HIGH Risk is assigned to OSDPD, because mitigation plan requires PGD-level action. |
| | Actions associated with Risk # 35 | N/A | **High** | **N** | No IASI actions. |
| | Risk # 36 | PASS | **None** | **N** | |
| | Actions associated with Risk # 36 | PASS | **None** | **N** | |
| 6.1.2 | The SRD reports the status of all actions identified in the TRR Report with sufficient detail to allow the SRR reviewers to assess the current status of the TRR risks and actions | PASS | **None** | **N** | |
| 6.2.1 | The SRD reports, in sufficient detail, the status of each risk that has been identified since the TRR. | PASS | **None** | **N** | |
| 6.2.2 | The SRD reports the status of all new actions with sufficient detail to allow the SRR reviewers to assess the current status of new risks and actions | PASS | **None** | **N** | |
| 6.3.1 | The SRD provides a list of risks that can be closed | PASS | **None** | **N** | |
| 6.4.1 | The SRD provides a list of outstanding risks, in priority order. | PASS | **None** | **N** | |
| 6.4.2 | The SRD lists all actions that must be closed to reduce outstanding risk to an acceptable level, with closure plans and estimated closure dates | PASS | **None** | **N** | |
| 6.4.3 | The SRR reviewers' assessment of outstanding risks and actions is documented in the SRR Report | PASS | **None** | **N** | |
| **7.0** | **Summary and Conclusions** | | | | |
| 7.1.1 | All review objectives have been addressed. | PASS | **None** | **N** | |
| 7.2.1 | The SRD lists all outstanding issues, actions and risks that require attention. | PASS | **Low** | **Y** | Seven LOW risks remain open. Remaining open actions must be closed to eliminate these risks.<br><br>One HIGH risk remains. This risk requires OSDPD action.<br><br>**NEW ACTION SRR 7.2.1.1 - Monitor risks and actions after the SRR.** |
| 7.3.1 | The SRD lists the recommendations of the development team for the next steps after the SRR. | PASS | **None** | **N** | |

END OF DOCUMENT

# IASI L1CT System Readiness Review Check List

## 99 Items in 7 Sections

| CLI # | Check List Item (CLI) | Disposition | | | | | Risk | Action (Y/N) | Comments |
|---|---|---|---|---|---|---|---|---|---|
| | | Pass | Conditional Pass | Defer | Waive | N/A | | | |
| **1.0** | **Introduction** | | | | | | | | |
| 1.1.1 | Project objectives are derived from customer needs and expectations. | X | | | | | None | N | |
| 1.2.1 | Project stakeholder roles have been identified. | X | | | | | None | N | |
| 1.2.2 | Project stakeholder personnel have been identified. | X | | | | | None | N | |
| 1.2.3 | Project stakeholder tasks have been adequately described. | X | | | | | None | N | |
| 1.3.1 | The description of the project plan includes tasks, resources and schedule of milestones. | X | | | | | None | N | |
| 1.3.2 | Modifications to the project plan since Test Readiness Review (TRR) are clearly explained, including the rationale and documentation of management concurrence. | X | | | | | None | N | |
| 1.3.3 | Stakeholders are involved in the project as expected. | | | | X | | Low | N | Late OSDPD involvement in the project added risk. This risk has been greatly reduced by OSDPD involvement in TRR and SRR, and by regular meetings between IASI Development and Operations teams that were begun in May 2007. |
| 1.4.1 | The System Readiness Document (SRD) provides pointers to the SRR Peer Review Guidelines (PRG-14.1) and SRR Checklist (CL 14.1). | X | | | | | None | N | |
| 1.5.1 | The SRD provides a pointer to the SRR Report Document Guidelines (DG-14.6). | X | | | | | None | N | |
| 1.6.1 | The SRR review objectives, as stated in the SRD, are satisfactory. | X | | | | | None | N | |
| **2.0** | **Test Readiness Review Report** | | | | | | | | |
| 2.1.1 | The SRD provides a pointer to the Test Readiness Review Report (TRRR) | X | | | | | None | N | |
| 2.1.2 | The SRD explains the purposes of the TRRR | X | | | | | None | N | |
| 2.2.1 | The SRD summarizes the status of check list items (CLIs) from the TRR. | X | | | | | None | N | |
| 2.2.2 | The SRD provides a rationale and risk assessment for TRR "Waive" items | X | | | | | None | N | |
| 2.3.1 | The SRD summarizes the status of TRR exit criteria. | X | | | | | None | N | |
| 2.4.1 | The SRD states the number of open risks and actions from the TRRR | X | | | | | None | N | |
| 2.5.1 | SRR entry criteria are listed completely and correctly in the SRD. | X | | | | | None | N | |
| 2.5.2 | The SRD provides a satisfactory description of tailored SRR entry criteria | X | | | | | None | N | |

| | | | | | | | | | |
|---|---|---|---|---|---|---|---|---|---|
| 2.5.3 | The SRD provides a satisfactory description of waived SRR entry criteria | X | | | | | **None** | **N** | |
| 2.5.4 | Deviations from SRR entry criteria that were established at TRR are approved and documented in the System Readiness Review Report (SRRR). | X | | | | | **None** | **N** | |
| 2.5.5 | Entry # 1 - A Test Readiness Review Report (TRRR) has been written. The SRR reviewers have access to the approved version of the TRRR. | X | | | | | **None** | **N** | |
| 2.5.6 | Entry # 2 - High level tasks and project milestones have been documented in a Microsoft Project file. The SRR reviewers have access to the approved version of the project file. | X | | | | | **None** | **N** | |
| 2.5.7 | Entry # 3 - A revised Requirements Allocation Document (RAD v1r1) has been written. The SRR reviewers have access to the approved version of the RAD v1r1. Open actions on the requirements allocation have been documented in the TRRR. | X | | | | | **None** | **N** | |
| 2.5.8 | Entry # 4 - An Interface Control Document (ICD v1r0) has been written. The SRR reviewers have access to the approved version of the ICD. Open actions on the external interfaces have been documented in the TRRR. | X | | | | | **None** | **N** | |
| 2.5.9 | Entry # 5 - A System Description Document (SDD v1r0) has been written. The SRR reviewers have access to the approved version of the SDD. Open actions on the system description have been documented in the TRRR. | X | | | | | **None** | **N** | |
| 2.5.10 | Entry # 6 - A Metadata Document (MDD v1r0) has been written. The SRR reviewers have access to the approved version of the MDD. Open actions on the metadata description have been documented in the TRRR. | X | | | | | **None** | **N** | |
| 2.5.11 | Entry # 7 - An Operations Manual (OM v1r0) has been written. The SRR reviewers have access to the approved version of the OM. Open actions on the operations documentation have been documented in the TRRR. | X | | | | | **None** | **N** | |
| 2.5.12 | Entry # 8 - A System Maintenance Manual (SMM v1r0) has been written. The SRR reviewers have access to the approved version of the SMM. Open actions on the maintenance documentation have been documented in the TRRR. | X | | | | | **None** | **N** | |
| 2.5.13 | Entry # 9 - A Users Manual (UM v1r0) has been written. The SRR reviewers have access to the approved version of the UM. Open actions on the users documentation have been documented in the TRRR. | X | | | | | **None** | **N** | |
| 2.5.14 | Entry # 10 - Pre-operational code units, external interfaces, ancillary data, and system test data have been integrated into a product processing system in the operational test environment. The SRR reviewers have access to the product processing system. Open actions on the product processing system have been documented in the TRRR. | | X | | | | **Low** | **Y** | Missing system test data.<br><br>**NEW ACTION SRR 2.5.14.1 - Add the static system test data to the delivered PPS.** |
| 2.5.15 | Entry # 11 - A Verification and Validation Report (VVR v1r0) has been written. The TRR reviewers have access to the approved version of the VVR. Open actions on verification and validation have been documented in the TRRR. | X | | | | | **None** | **N** | |

| | | | | | | | | | |
|---|---|---|---|---|---|---|---|---|---|
| 2.5.16 | Entry # 12 - A Project Baseline Report (PBR v2r0) has been written. The TRR reviewers have access to the approved version of PBR v2r0. | X | | | | | **None** | **N** | |
| 2.5.17 | Entry # 13 - A System Readiness Document (SRD) has been written. SRR review objectives are clearly stated in the SRD. Deviations from the STAR EPL standard objectives for an SRR have been approved. | X | | | | | **None** | **N** | |
| 2.6.1 | SRR exit criteria are listed completely and correctly in the SRD. | X | | | | | **None** | **N** | |
| 2.6.2 | The SRD provides a satisfactory description of tailored SRR exit criteria | X | | | | | **None** | **N** | |
| 2.6.3 | The SRD provides a satisfactory description of waived SRR exit criteria | X | | | | | **None** | **N** | |
| 2.6.4 | Deviations from the SRR exit criteria that were established at TRR are approved and documented in the SRRR. | | | | | X | **None** | **N** | There are no deviations. |
| 2.6.5 | Exit # 1 - TRR "Conditional Pass" items have been satisfactorily disposed of. | X | | | | | **None** | **N** | |
| 2.6.6 | Exit # 2 - TRR "Defer" items have been satisfactorily disposed of. | X | | | | | **None** | **N** | |
| 2.6.7 | Exit # 3 - The Project Plan is satisfactory | X | | | | | **None** | **N** | |
| 2.6.8 | Exit # 4 - The requirements allocation and RAD are satisfactory. | | X | | | | **Low** | **Y** | ACTIONS TRR 4.4.1.2, TRR 4.9.1.4 |
| 2.6.9 | Exit # 5 - The external interfaces and ICD are satisfactory. | X | | | | | **None** | **N** | |
| 2.6.10 | Exit # 6 - The system description and SDD are satisfactory. | X | | | | | **None** | **N** | |
| 2.6.11 | Exit # 7 - The metadata and MDD are satisfactory. | X | | | | | **None** | **N** | |
| 2.6.12 | Exit # 8 - The operations procedures, training, tools, and documentation are satisfactory. | | X | | | | **Low** | **Y** | **NEW ACTION SRR 2.6.12.1 - Provide the tools for science validation to OSDPD.** |
| 2.6.13 | Exit # 9 - The system maintenance procedures and documentation are satisfactory. | X | | | | | **None** | **N** | |
| 2.6.14 | Exit # 10 - The delivery procedures, tools, training, support services, and documentation available to the users are satisfactory. | X | | | | | **None** | **N** | |
| 2.6.15 | Exit # 11 - System test results and VVR are satisfactory. | X | | | | | **None** | **N** | |
| 2.6.16 | Exit # 12 - The project baseline and PBR are satisfactory. | | X | | | | **Low** | **Y** | ACTION TRR 4.4.1.2 |
| 2.6.17 | Exit # 13 - The SRRR documents updated status of project risks and actions. The risk status is acceptable for commencement of operations. | X | | | | | **None** | **N** | |
| 2.6.18 | Exit # 14 - The integrated product processing system is ready for installation in the operations environment. | X | | | | | **None** | **N** | |
| **3.0** | **System Requirements** | | | | | | | | |

| | | | | | | | | | |
|---|---|---|---|---|---|---|---|---|---|
| 3.1.1 | User needs and expectations are adequately and consistently described in the SRD and other project artifacts | X | | | | | **None** | **N** | |
| 3.2.1 | The SRD describes a timeline scenario for the product that balances customer needs and expectations with operational constraints | X | | | | | **None** | **N** | The lack of an operations concept (ConOps) is a weakness. Risk is greatly mitigated by extensive communication with users and supply of test products to them. |
| 3.3.1 | The SRD provides an overview of the RAD and a pointer to the RAD | X | | | | | **None** | **N** | |
| 3.4.1 | The SRD describes new requirements since TRR. New requirements are approved. | X | | | | | **None** | **N** | |
| 3.4.2 | The SRD describes requirements changes since TRR. Requirements changes are approved. | X | | | | | **None** | **N** | |
| 3.4.3 | The SRD describes requirements allocation changes since TRR. Requirements allocation changes are approved. | X | | | | | **None** | **N** | |
| **4.0** | **System Description** | | | | | | | | |
| 4.1.1 | The SRD describes the purpose of the System Description Document (SDD), Interface Control Document (ICD) and Metadata Document (MDD) | X | | | | | **None** | **N** | |
| 4.1.2 | The SRD provides pointers to the SDD, ICD, and MDD | X | | | | | **None** | **N** | |
| 4.2.1 | The SRD identifies On-Line and Off-Line subsystems | X | | | | | **None** | **N** | |
| 4.2.2 | The SRD identifies the major functional subsystems | | | | X | | **None** | **N** | Units are described rather than subsystems, so a system architecture layer has been omitted. This reflects the history of the system architecture development, which did not follow standards. Risk is to optimization of design. This risk is greatly reduced, because the design has been optimized through extensive testing and user feedback. Therefore, we can waive this item without incurring significant risk. |
| 4.2.3 | The SRD illustrates the flows between subsystems | | | | X | | **None** | **N** | See CLI 4.2.2 |
| 4.3.1 | The SRD lists the requirements for the Ingest subsystem, consistent with the RAD. | | | | X | | **None** | **N** | Requirements are listed for units, not subsystems. This reflects the history of the system architecture development, which did not follow standards. Risk is to optimization of design. This risk is greatly reduced, because the design has been optimized through extensive testing and user feedback. Therefore, we can waive this item without incurring significant risk. |
| 4.3.2 | The SRD lists and describes the hardware and software components of the Ingest subsystem, consistent with the SDD, ICD, and MDD. | | | | X | | **None** | **N** | Hardware components are described, but not distributed to subsystems. This reflects the history of the system architecture development, which did not follow standards. Risk is to optimization of design. This risk is greatly reduced, because the design has been optimized through extensive testing and user feedback. Therefore, we can waive this item without incurring significant risk. |
| 4.4.1 | The SRD lists the requirements for the Production subsystem, consistent with the RAD. | | | | X | | **None** | **N** | See comments for CLI 4.3.1. |

| | | | | | | | | | |
|---|---|---|---|---|---|---|---|---|---|
| 4.4.2 | The SRD lists and describes the hardware and software components of the Production subsystem, consistent with the SDD, ICD, and MDD. | | | | X | | None | N | See comments for CLI 4.3.2. |
| 4.4.3 | The SRD describes the operational sequence, consistent with the SDD. | X | | | | | None | N | |
| 4.4.4 | The SRD describes the operational production environment, consistent with the SDD. | X | | | | | None | N | |
| 4.5.1 | The SRD lists the requirements for the Delivery subsystem, consistent with the RAD. | X | | | | | None | N | |
| 4.5.2 | The SRD lists and describes the hardware and software components of the Delivery subsystem, consistent with the SDD, ICD, and MDD. | | | | X | | None | N | See comments for CLI 4.3.1. |
| 4.6.1 | The SRD lists the requirements for the Monitoring subsystem, consistent with the RAD. | | X | | | | Low | Y | See comments for CLI 4.3.1. Also: Changes for operational monitoring require SRD modifications (e.g., no reference to OPUS)<br><br>**NEW ACTION SRR 4.6.1.1 - Remove references to OPUS monitoring in SRD and UTP.** |
| 4.6.2 | The SRD lists and describes the hardware and software components of the Monitoring subsystem, consistent with the SDD, ICD, and MDD. | | | | X | | None | N | See comments for CLI 4.3.1 |
| 4.7.1 | The SRD lists the requirements for the Validation subsystem, consistent with the RAD. | | | | X | | None | N | See comments for CLI 4.3.1. |
| 4.7.2 | The SRD lists and describes the hardware and software components of the Validation subsystem, consistent with the SDD, ICD, and MDD. | | | | X | | None | N | See comments for CLI 4.3.2. |
| 4.8.1 | The SRD lists the requirements for the Maintenance subsystem, consistent with the RAD. | | | | X | | None | N | See comments for CLI 4.3.1. |
| 4.8.2 | The SRD lists and describes the hardware and software components of the Maintenance subsystem, consistent with the SDD, ICD, and MDD. | | | | X | | None | N | See comments for CLI 4.3.2. |
| 4.9.1 | The SRD provides a pointer to the Project Baseline Report (PBR). | X | | | | | None | N | |
| **5.0** | **System Readiness** | | | | | | | | |
| 5.2.1 | The SRD explains the concepts of verification and validation | X | | | | | None | N | |
| 5.2.2 | The SRD provides a pointer to the project Verification and Validation Report (VVR) | X | | | | | None | N | |
| 5.3.1 | The SRD lists the product users and the product components to be delivered to each user, consistent with the RAD. | X | | | | | None | N | |
| 5.3.2 | The SRD states the identified needs of each user, consistent with the RAD. | X | | | | | None | N | |
| 5.3.3 | System test results that validate each user need are consistently and satisfactorily presented in the SRD and the VVR | X | | | | | None | N | |

| | | | | | | | | | |
|---|---|---|---|---|---|---|---|---|---|
| 5.3.4 | The SRD describes the purpose and function of the Users Manual (UM) and provides a pointer to the project UM | X | | | | | None | N | |
| 5.4.1 | The SRD identifies the organization and personnel that will operate and maintain the operational product processing system | X | | | | | None | N | |
| 5.4.2 | The SRD states the identified operator needs, consistent with the RAD. | X | | | | | None | N | |
| 5.4.3 | System test results that validate each operator need are consistently and satisfactorily presented in the SRD and the VVR | X | | | | | None | N | |
| 5.4.4 | The SRD describes the purpose and function of the Operations Manual (OM) and provides a pointer to the project OM | X | | | | | None | N | |
| 5.4.5 | The SRD describes the purpose and function of the System Maintenance Manual (SMM) and provides a pointer to the project SMM | X | | | | | None | N | |
| **6.0** | **Risks and Actions** | | | | | | | | |
| 6.1.1 | The SRD correctly reports, in sufficient detail, the status of each risk identified in the TRR Report. | X | | | | | None | N | |
| | Risk # 2 | X | | | | | None | N | |
| | Actions associated with Risk # 2 | X | | | | | None | N | |
| | Risk # 3 | | X | | | | Low | N | |
| | Actions associated with Risk # 3 | | X | | | | Low | Y | ACTION TRR 1.3.3.1 |
| | Risk # 4 | X | | | | | None | N | |
| | Actions associated with Risk # 4 | X | | | | | None | N | |
| | Risk # 5 | X | | | | | None | N | |
| | Actions associated with Risk # 5 | X | | | | | None | N | |
| | Risk # 6 | X | | | | | None | N | |
| | Actions associated with Risk # 6 | X | | | | | None | N | |
| | Risk # 7 | X | | | | | None | N | |
| | Actions associated with Risk # 7 | X | | | | | None | N | |
| | Risk # 8 | | X | | | | Low | N | |
| | Actions associated with Risk # 8 | | X | | | | Low | Y | ACTIONS TRR 4.4.1.2, TRR 4.9.1.4 |

| | | | | | | | | | |
|---|---|---|---|---|---|---|---|---|---|
| | Risk # 9 | | X | | | | Low | N | |
| | Actions associated with Risk # 9 | | X | | | | Low | Y | ACTIONS TRR 1.7.13.1, TRR 4.4.1.2 |
| | Risk # 10 | | X | | | | Low | N | |
| | Actions associated with Risk # 10 | | X | | | | Low | Y | ACTIONS TRR 1.7.10.1, TRR 4.9.1.4, TRR 4.9.1.5, TRR 4.10.1.1, TRR 4.10.1.3, SRR 2.5.14.1 |
| | Risk # 11 | | X | | | | Low | N | |
| | Actions associated with Risk # 11 | | X | | | | Low | Y | ACTION SRR 2.6.12.1 |
| | Risk # 12 | X | | | | | None | N | |
| | Actions associated with Risk # 12 | X | | | | | None | N | |
| | Risk # 13 | | X | | | | Low | N | |
| | Actions associated with Risk # 13 | | X | | | | Low | Y | ACTION SRR 7.2.1.1 |
| | Risk # 14 | X | | | | | None | N | |
| | Actions associated with Risk # 14 | X | | | | | None | N | |
| | Risk # 15 | X | | | | | None | N | |
| | Actions associated with Risk # 15 | X | | | | | None | N | |
| | Risk # 17 | X | | | | | None | N | |
| | Actions associated with Risk # 17 | X | | | | | None | N | |
| | Risk # 18 | | X | | | | Low | N | |
| | Actions associated with Risk # 18 | | X | | | | Low | Y | ACTION TRR 1.3.3.1 |
| | Risk # 20 | X | | | | | None | N | |
| | Actions associated with Risk # 20 | X | | | | | None | N | |
| | Risk # 21 | X | | | | | None | N | |
| | Actions associated with Risk # 21 | X | | | | | None | N | |
| | Risk # 23 | X | | | | | None | N | |

| | | | | | | | | | |
|---|---|---|---|---|---|---|---|---|---|
| | Actions associated with Risk # 23 | X | | | | | **None** | **N** | |
| | Risk # 25 | X | | | | | **None** | **N** | |
| | Actions associated with Risk # 25 | X | | | | | **None** | **N** | |
| | Risk # 31 | X | | | | | **None** | **N** | |
| | Actions associated with Risk # 31 | X | | | | | **None** | **N** | |
| | Risk # 32 | X | | | | | **None** | **N** | |
| | Actions associated with Risk # 32 | X | | | | | **None** | **N** | |
| | Risk # 33 | X | | | | | **None** | **N** | |
| | Actions associated with Risk # 33 | X | | | | | **None** | **N** | |
| | Risk # 34 | X | | | | | **None** | **N** | |
| | Actions associated with Risk # 34 | X | | | | | **None** | **N** | |
| | Risk # 35 | | | | | X | **High** | **N** | HIGH Risk is assigned to OSDPD, because mitigation plan requires PGD-level action. |
| | Actions associated with Risk # 35 | | | | | X | **High** | **N** | No IASI actions. |
| | Risk # 36 | X | | | | | **None** | **N** | |
| | Actions associated with Risk # 36 | X | | | | | **None** | **N** | |
| 6.1.2 | The SRD reports the status of all actions identified in the TRR Report with sufficient detail to allow the SRR reviewers to assess the current status of the TRR risks and actions | X | | | | | **None** | **N** | |
| 6.2.1 | The SRD reports, in sufficient detail, the status of each risk that has been identified since the TRR. | X | | | | | **None** | **N** | |
| 6.2.2 | The SRD reports the status of all new actions with sufficient detail to allow the SRR reviewers to assess the current status of new risks and actions | X | | | | | **None** | **N** | |
| 6.3.1 | The SRD provides a list of risks that can be closed | X | | | | | **None** | **N** | |
| 6.4.1 | The SRD provides a list of outstanding risks, in priority order. | X | | | | | **None** | **N** | |
| 6.4.2 | The SRD lists all actions that must be closed to reduce outstanding risk to an acceptable level, with closure plans and estimated closure dates | X | | | | | **None** | **N** | |
| 6.4.3 | The SRR reviewers' assessment of outstanding risks and actions is documented in the SRR Report | X | | | | | **None** | **N** | |

| | | | | | | | | | |
|---|---|---|---|---|---|---|---|---|---|
| **7.0** | **Summary and Conclusions** | | | | | | | | |
| 7.1.1 | All review objectives have been addressed. | X | | | | | **None** | **N** | |
| 7.2.1 | The SRD lists all outstanding issues, actions and risks that require attention. | X | | | | | **Low** | **Y** | Seven LOW risks remain open. Remaining open actions must be closed to eliminate these risks.<br><br>One HIGH risk remains. This risk requires OSDPD action.<br><br>**NEW ACTION SRR 7.2.1.1 - Monitor risks and actions after the SRR.** |
| 7.3.1 | The SRD lists the recommendations of the development team for the next steps after the SRR. | X | | | | | **None** | **N** | |