NOAA NESDIS OSD

ML006845

MATRA MARCONI SPACE	MetOp	Ref. MO-IC-MMT-SE-0001 Issue : 2 Rev. : 0 Date June 29th 1998 Page i

MATRA CMT METOP
Reçu : 30 JUIN 1998
Archivage n° : 4977

Title

SPACE ENVIRONMENT MONITOR-2 INSTRUMENT INTERFACE CONTROL DOCUMENT

SEM-2 ICD

	Name and Function	Date	Signature
Prepared by :	METOP Team		
Verified by :	JL. DUQUESNE *Instrument Interface Principal Engineer* JP. GARDELLE *Integrated Payload Module APM*	29/06/98 29/06/98	
Approved by :	D. HERBIN *Product Assurance APM* Ch. BOUSQUET *System Engineering APM*	29/06/98	
Authorized by :	D. PAWLAK *MMS METOP Project Manager*		

	SSST (ESA / EUM)	Instrument Provider	Instrument Supplier	Instrument Supplier?
Application authorized by :	P. G. EDWARDS *METOP Project Manager (ESA)*	M. LANGEVIN *EPS Programme Manager (EUMETSAT)*	H.McCain *POES Project Manager GSFC (NASA)*	M. Mignogno *NOAA POES Program Manager (NOAA)*
	Date : 5.8.98	Date : 17/8/98	Date : Aug 26, 1998	Date : Aug 27, 1998

Document type	Nb WBS	Keywords :

The distribution of this document and applicable / reference documents within Europe and North America is restricted to METOP partners only.

BLANK

DOCUMENT CHANGE LOG

Issue/ Revision	Date	Modification Nb	Modified pages	Observations
Draft	Nov. 1995	-		New document - PR Issue
Draft 2	July 1996		All	Complete revision
Issue 1	Nov. 15th. 1996	-	All	Complete revision
Iss. 1 Rev. A	Dec. 1996	MO-LT-MMT- 1041.96	109	-
Iss. 1 Rev. B	Jan. 1997	MO-FX-MMT4088.97	6	-
C/D Proposal	August 1997	MO-NT-MM-T-SE-0001	85	
Issue 2	June 29th 1998	-	All	Complete revision

PAGE ISSUE RECORD

Issue of this document comprises the following pages at the issue shown

Pages	Issue / Revision	Pages	Issue / Revision	Pages	Issue / Revision	Pages	Issue / Revision
i to xvii	Iss. 2 Rev. 0						
1.1 to 1.28	Iss. 2 Rev. 0						
2.1 to 2.41	Iss. 2 Rev. 0						
3.1 to 3.98	Iss. 2 Rev. 0						
4.1 to 4.18	Iss. 2 Rev. 0						
5.1 to5.21	Iss. 2 Rev. 0						
6.1 to 6.4	Iss. 2 Rev. 0						

DISTRIBUTION LIST

	MMS-F Toulouse
X	P. ARBERET
	J.C. ASTRUC
	J. AUGIER
	S. BARREAU
	P. BELLEAU
	A. BENICHOU
	F. BINTER
	P. BISOGNIN
	R BOTTON
	M. BOUFFARD
X	C BOUSQUET
	S. BRACONNIER
	E. BRUGNERA
	C. BUGE
X	s. CAMILLERI
	F. CARRE
	D. CARRILLIER
X	J. CHAMBON
	A CHAZAL
X	P. CORRADIN
	v. COSCULLUELA
	JP. COUSTY
	G. CROS
	A. DABASSE
	L. DE LA TAILLE
X	M. DELGADO
	F. DIGESU
	JP. DUMAS
X	J.L. DUQUESNE
	C. DURAND
	JF'S. DURAND
	L. DUROU
	JF. ECOBICHON
	E. ESTRADA
	M. FAVREAU
	D. FORET
	D. FOSSE
	A GACH
	J.F. GAJEWSKI
	J. GALAN
	Ph. GALLAND
X	J.P. GARDELLE
	X. GEORJON
	J.M. GOUTOULE
	M. HENAULT
	D. HERBIN
X	F JOUFFROY
X	D LEBRETON
	M LEFEBVRE
	A. MARTIN
X	J.P. MIELLOU
	1. MOLES
	P. MOLLET
X	JM. OBERTO
X	D. PAWLAK
	S. PEDEN
	T. PONCIN
	JJ. PUISSANT
	A. REUILH
	J.P. RIEU
	V. SALMOS
	R TARDIVIER

	MMS-F Toulouse ...
X	J. TISSERANT
	S. TOUZEAU
	B. VATAN

	ESTEC
	K. BUCHLER
	B. BERGAGLIO
	B. BERRUTI
	S.J. BOSMA
	S. CARLIER
	P.G. EDWARDS
	s. FIORILLI
	R FRANCIS
	R GELSTHORPE
	A. HAHNE
	R. HALM
	R. KRUTSCH
	A LEFEBVRE
	s. LOKAS
	Y. MENARD
	B. NAUIAIS
	E. NERI
	N. STRICKER

	EUMETSAT
	P. BLYTHE
	A. BOISSIN
	D. DIEBEL
	S. ERIKSSON
	J. EVANS
	M. LANGEVIN
	G. MASON
	A RUBACH-LARSEN
	W. J. SEYMOUR.

	DORNIER
	R. BELAU
	J. FRITZ
	H. HEIDEMANN
	R HENDRICKS
	A HERTLE
	KO. HIENERWADEL
	HP. HONOLD
	M. HOPFGARTEN
	H KLOSTERMANN
	K. LINDEMANN
	V. LINDEKUGEL
	D. MILLER
	H.J. MULLER
	H. ROMER
	B. SACHSSE
	F. TANNER

X	MMS-SS
	R. BAKER
	E. BRAY
	R. CAHILL
	J. KJLLICK
	AIAING
	S. MITCHELL
	D. PIDOUX
	C. PRIOR
	N. RUFENER
	H. SMITH
	P. SOPPIT
	I. STEWART
	K. TOMKINS
	M. TOWNEND
	J. TRIPP

	ALENIA
	E. CATENA
	P. BIOCCA
	R. BORDI
	A. CAPECE
	A. CAPUZI
	A. RUSSO
	A. SALOME
	C. SCACCHETTI

	DNV
	P.O. ARALDSEN
	J. OSKARSSON
	M. PAHLE

	FOKKER
	N. BADER
	AHENDRIKX
	J. POLEY
	W. SEBEK
	G. VERMIJ
	H. VAN DER BRINK

	AEROJET
	W. MULOOLY

	AS CANNES
	P. PULITINI

	CNES
	G. PORTAS
	G. CHALON

	GALILEO
	R. VERATTI

	ITT
	M. V. BERTIN

	MMS-P
	K. BAKER

	NASA/GSFC
	R. ALEMAN
	G. COLON
	D. CROSBY

	NDH
	J.Y.R. LAPOINTE

	NOAA
	A.M. MUCKLE

	PANAMETRICS
	F.B.SELLERS

TBC / TBD LISTS

This document includes several TBD (to be defined) and TBC (to be confirmed) on the following pages.

TBD_{SEM} on Pages	TBC_{SEM} on Pages
-	-
2.5 2.6 2.25 2.26 2.27 2.39	2.22
3.13 3.36 3.97	3.94
	-
5.9	5.9
6.2 6.3	6.2

TBD_{MET} on Pages	TBC_{MET} on Pages
1.2	1.16 1.17 1.18 1.19 1.20
2.5 2.6 2.20 2.21 2.22 2.32 2.35 2.36 2.37 2.38 2.39 2.40	2.20 2.21 2.35 2.37 2.38
3.36 3.42 3.93	-
-	4.2 4.3 4.13 4.14
5.4	5.13
6.2 6.3	-

TABLE OF CONTENTS

1. GENERAL INFORMATION .....

1.1. GENERAL 1.1

1.1.1. Purpose of the Document ..... 1 . 1

1.1.2. Documentation 1.1

1.1.2.1. Applicable Documentation 1.1

1.1.2.2. Reference Documentation. 1.2

1.1.3. Acronym List 1.3

1.2. INSTRUMENT PRESENTATION 1.6

1.2.1. General 1.6

1.22. Scientific Objectives 1.6

1.2.3. Functional Description 1.8

1.2.3.1. Total Energy Detector (TED) 1.8

1.2.3.2. Medium Energy Proton Electron Detector (MEPED) 1.8

1.2.3.3. Data Processing Unit (DPU) 1.8

1.3. METOP SYSTEM OVERVIEW 1.10

1.3.1. Spacecraft Architecture Concept 1.10

1.3.2. METOP Reference Frames 1.14

1.3.2.1. Satellite Reference Frame.. ..... 1.14

1.3.2.2. Instrument Reference Frame 1.14

1.3.2.2.1. SEM-2 TED and MEPED Sensor Reference Frames 1.14

1.3.2.2.2. SEM-2 DPU Internally Mounted Unit Reference Frame 1.14

1.3.3. Orbital Parameters 1.16

1.3.3.1. Reference Orbit 1.16

1.3.3.2. Drift Orbit.. ..... 1.16

1.3.4. Satellite Mission Phases and Operations 1.16

1.3.4.1. Mission Phases 1.16

1.3.4.2. Satellite Operational Modes 1.17

1.3.4.2. 1. Nominal Operational Mode 1.17

1.3.4.2.2. Orbit Control Modes 1.17

1.3.4.2.3. Acquisition Modes 1.18
1.3.4.2.4. Contingency Cases.. ..... 1.19
1.3.4.2.5. Safe Mode (Sun Pointing) 1.20

1.4. INSTRUMENT OPERATIONAL MODES 1.21

1.4.1. Operational Constraints 1.21

1.4.2. Instrument Mode Overview 1.21

1.4.2.1. SEM-2 Off Mode 1.21
1.4.22. SEM-2 On Mode 1.22
1.4.2.3. SEM-2 Calibration Mode 1.22

1.4.3. Cross Reference Between Instrument and PLM Modes 1.23

1.5. INSTRUMENT LAUNCH AND IN-ORBIT OPERATIONS.. ..... 1.24

1.5.1. General.. ..... 1.24

1.5.2. Instrument Sequences to SEM-2 Off Mode.. ..... 1.24

1.5.2.1. Nominal Sequence to Off Mode.. ..... 1.24
1.5.2.2. Emergency Sequence to SEM-2 Off Mode.. ..... 1.25
1.5.2.3. Comments on Operations During the SEM-2 Off Mode.. ..... 1.25

1.5.3. Instrument Sequences to SEM-2 On Mode.. ..... 1.26

1.5.4. Sequences During SEM-2 On Mode.. ..... 1.27

1.5.5. Sequences for the SEM-2 Calibration Mode 1.28

2. MECHANICAL AND THERMAL INTERFACE DESCRIPTION.. .....

2.1. GENERAL 2.1

2.1.1. Interface Definition 2.1

2.1.2. Module / Unit Identification 2.2

2.1.3. Reference Frames 2.3

2.1.3.1. Satellite Reference Frame.. ..... 2.3
2.1.3.2. Instrument Reference Frame 2.3

2.1.4. Interface Drawings.. ..... 2.4

2.1.4.1. Mechanical Interface Drawings.. ..... 2.4
2.1.4.2. Thermal Interface Drawing 2.5
2.1.4.3. Field of View Interface Drawing 2.6

2.2. MECHANICAL INTERFACE DESCRIPTION.. 2.16

2.2.1. Physical Envelope 2.16

2.2.2. Field of View Definition 2.18

2.2.3. Mass Properties 2.19

2.2.3.1. Mass and Centre of Mass Location.. 2.19

2.2.3.2. Moments of Inertia 2.20'

2.2.4. Instrument Mounting Attachments 2.20

2.2.4.1. Mounting Description 2.20

2.2.4.2. Mounting Hole Position and Reference Point (Hole) 2.21

2.2.4.3. Mounting Surface Characteristics 2.21

2.2.4.4. Instrument Location 2.21

2.2.4.5. Materials at Interfaces 2.21

2.2.4.6. Thermo-Elastic Interface 2.21

22.4.7. Grounding Provisions 2.21

2.25. Accessibility 2.22

2.2.6. On-Ground Alignment 2.23

2.2.6.1. Alignment Method 2.23

226.2 Alignment Hardware 2.23

226.3. Alignment Tolerances for Instrument Interfaces.. 2.23

22.6.4. Co-Alignment 2 . 2 3

2.2.7. Deployment Mechanisms and Pyros 2.24

2.2.7.1. Deployment Mechanisms 2.24

2.2.7.2. Pyros 2.24

2.2.8. Interface Structural Design 2.24

2.2.8.1. SEM-2 Limit Loads 2.24

2.2.8.2. METOP Induced Limit Loads 2.24

2.2.8.3. l-g Interface Loads 2.25

2.2.8.4. Structural Frequency Characteristics 2.28

2.2.8.4.1. Launch Configuration Stiffness Characteristics 2.28

2.2.8.4.2. In-Orbit Configuration Stiffness Characteristics 2.28

2.2.8.5. Structural Mathematical Models - Applicability for SEM-2.. 2.28

2.3. THERMAL INTERFACE DESCRIPTION 2.29

2.3.1. Thermal Control Concept.. 2.29

2.3.1.1 Thermal Control During Nominal Operations 2.30

2.3.1.2. Thermal Control During Non Nominal / Contingency Operations.. 2.30
2.3.1.2.1. General.. 2.30
2.3.1.2.2. Transient Attitudes.. 2.30
2.3.1.2.3. METOP Orbit Control Modes.. 2.30
2.3.1.2.4. METOP Safe Mode 2.30
2.3.2. Instrument Thermal Requirements 2.31
2.3.2.1. Instrument Temperature Range 2.31
2.3.2.1.1. On-Orbit Temperature Range 2.31
2.3.2.1.2. Ground Testing Temperature limits 2.31
2.3.2.1.3. Ground Storage and Transportation Temperature Range.. 2.32
2.3.2.2. Temperatures at the Interface 2.32
2.3.2.2.1. TED and MEPED 2.32
2.3.2.2.2. DPU 2.32
2.3.2.2.3. Stability Requirements.. 2.33
2.3.2.3. Radiative Requirements 2.33
2.3.3. Thermal Control Budgets 2.34
2.3.3.1. Heater Power Budgets 2.34
2.3.3.2. Instrument Thermal Dissipation 2.34
2.3.3.3. Heat Exchange Budgets 2.34
2.3.3.3.1. Conductive Heat Transfer 2.34
2.3.3.3.2. Joint Characteristics 2.35
2.3.3.3.3. Radiative Heat Transfer 2.35
2.3.4. Thermal Interfaces.. 2.36
2.3.4.1. Conductive Interfaces 2.36
2.3.4.1.1. Description (TED and MEPED Only) 2.36
2.3.4.1.2. Bolts (TED and MEPED Only). 2.36
2.3.4.1.3. Thermal Stand-Offs (TED and MEPED Only) 2.37
2.3.4.2. Radiative Interfaces 2.37
2.3.4.2.1. Radiator Characteristics 2.37
2.3.4.2.2. Thermo-Optical Properties 2.37
2.3.4.3. Thermal Heat Capacity 2.38
2.3.4.4. Instrument Temperature Measurement.. 2.39
2.3.4.4.1. Temperature Measurement During Operational Phases 2.39
2.3.4.4.2. Temperature Measurement During Non Operating Phases 2.39
2.3.4.5. Heater Definition 2.39
2.3.4.5.1. Operational Heaters 2.39
2.3.4.5.2. Survival Heaters 2.40
2.3.4.6. Thermal Interface Models 2.40

2.4. INSTRUMENT AND DISTURBANCE INTERFACES 2.41

3. COMMAND AND CONTROL, MEASUREMENT DATA, ELECTRICAL, EMC AND RFC INTERFACE DESCRIPTION .....

3.1. ELECTRICAL INTERFACE OVERVIEW 3.1

3.2. COMMAND AND CONTROL FUNCTIONAL DESCRIPTION 3.2

3.2.1. Protocol 3.2

3.2.2. Telecommands 3.2

3.2.2.1. Telecommand Definition 3.3

3.2.2.2. T&command Functional Description 3.6

3.2.3. Housekeeping Telemetry 3.9

3.2.3.1. General Requirements 3.9

3.2.3.2. Digital B Telemetry 3.10

3.2.3.3. Analog Telemetry 3.12

3.2.4. Telecommand Verification 3.16

3.25. METOP Specific Thermal Control Electrical Interfaces 3.18

3.2.6. Satellite Services / Synchronization 3.18

3.3. MEASUREMENT DATA TRANSFER FUNCTIONAL DESCRIPTION 3.19

3.3.1. Data Rate 3.19

3.3.2. Measurement Data Acquisition 3.19

3.3.3. Measurement (Digital A) Data Format 3.22

3.3.3.1. SEM-2 On Mode 3.22

3.3.3.2. SEM-2 Calibration Mode 3.31

3.4. POWER ELECTRICAL INTERFACES 3.32

3.4.1. Overview 3.32

3.4.2. Power Demand 3.35

3.4.3. Power Electrical Interface Requirements 3.37

3.4.3.1. Power Interface Data Sheets 3.37

3.4.3.2. Power Interface Circuits 3.43

3.4.4. Power connectors 3.45

3.45. Power Pin Allocation Lists.. 3.45

3.5. SIGNAL ELECTRICAL INTERFACES 3.50

3.5.1. Overview 3.50

3.5.2. Signal Interfaces with PLM Units 3.50

3.5.2.1. Signal Interface Requirements (Interfaces with PLM Units). 3.50

3.5.2.1.1. Signal Interface Data Sheets (Interfaces With PLM Units). 3.52

3.5.2.1.2. Signal Interface Circuits (Interfaces With PLM Units). 3.62

3.5.2.2. Signal Connectors (Interfaces With PLM Units) 3.66

3.5.2.3. Signal Pin Allocation Lists (Interfaces With PLM Units) 3.66

3.5.3. SEM-2 Internal Signal Interfaces 3.75

3.5.3.1. Signal Interface Requirements (SEM-2 Internal Interfaces). 3.75

3.5.3.2. Signal Connectors (SEM-2 Internal Interfaces). 3.75

3.5.3.3. Signal Pin Allocation' List (SEM-2 Internal Interfaces) 3.76

3.6. TEST INTERFACES 3.91

3.6.1. Electrical Test Interface Requirements.. 3.91

3.6.1.1. Interface Data Sheets 3.91

3.6.1.2. Interface Circuits 3.91

3.6.2. Electrical Test Interface Connectors 3.91

3.6.3. Electrical Test Interface Pin Allocation List.. 3.91

3.7. HARNESS 3.92

3.8. EMC INTERFACE DESCRIPTION 3.93

3.8.1. Electrical Bonding.. 3.93

3.8.1.1. General 3.93

3.8.1.2. Joint Faces.. 3.93

3.8.1.3. Structural Parts 3.93

3.8.1.4. Unit Housings.. 3.93

3.8.1.5. Thermal Blankets 3.93

3.8.1.5.1. Bonding of Thermal Blankets 3.93

3.8.1.5.2. Thermal Blanket Surface Resistance.. 3.93

3.8.1.6. Other Conductive Components.. 3.93

3.8.1.7. Cable and Harness Shields 3.93

3.8.1.8. Connectors 3.94

3.8.2. Grounding and Isolation 3.94
3.8.2.1. +28V Main Power Ground 3.94
3.8.22. +28V Switched Telemetry Ground.. ..... 3.94
3.8.2.3. +10V Interface Ground 3.94
3.8.2.4. Signal Ground 3.94
3.8.3. Shielding 3.96
3.8.3.1. Wire Shielding 3.96
3.8.3.1.1. Bonding of Shields 3.96
3.8.3.1.2 Overall Shield 3.96
3.8.3.1.3 Shields as Current-Carrying Conductors 3.96
3.8.3.2. Case Shielding 3.96
3.8.4. Electrostatic Susceptibility 3.97
3.8.5. SEM-2 Frequency Characteristics 3.97
3.8.6. Magnetic Moment.. ..... 3.97
3.8.7. EMC Performance Requirements 3.97
3.9. RF INTERFACE DESCRIPTION 3.98

4. INSTRUMENT VERIFICATION DESCRIPTION .....

4.1. MECHANICAL / STRUCTURAL VERIFICATION 4.1
4.1.1. Structural Analysis 4.1
4.1.1.1. Quasi-Static Loads (Interface). 4.1
4.1.1.2. Structural / Dynamic Analyses 4.1
4.1.1.3. Instrument Shock Environment.. ..... 4.1
4.1.2. Structural Tests 4.1
4.1.2.1. Structural Mathematical Model Validation.. ..... 4.1
4.1.2.2. Vibration Test : High Level Sine Sweep 4.2
4.1.2.3. Vibration Test : Sine Burst 4.2
4.1.2.4. Vibration Test : Random Levels 4.2
4.1.2.5. Acoustic Test 4.4
4.2. THERMAL VERIFICATION : THERMAL TESTS 4.5
4.2.1. Thermal Balance Test 4.5
4.2.2. Thermal Vacuum Tests 4.5

4.3. EMC VERIFICATION 4.6

4.3.1. EMC Performance Requirements 4.6

4.3.1.1. Conducted Emissio n ..... -4.6

4.3.1.1.1. SEM-2 Design Requirements 4.6

4.3.1.1.2. METOP Requirements 4.7

4.3.1.2. Conducted Susceptibility 4.9

4.3.1.3. Radiated Emission 4.11

4.3.1.3.1. Mil-Std-RE02 Requirements 4.11

4.3.1.3.2 SARR. SARP-3 and ADCS Receiver Channel Guard Limits 4.11

4.3.1.3.3. METOP Requirements 4.13

4.3.1.4. Radiated Susceptibility 4.14

4.3.2. EMC Analysis 4.14

4.3.3. EMC Tests 4.14

4.4. ELECTRICAL FUNCTIONAL VERIFICATION ..... 4. IS

4.4.1. Electrical Interface Tests 4.15

4.4.2. Functional Test 4.15

414.3. Performance Test 4.15

APPENDIX : INSTRUMENT ACHIEVED QUALIFICATION STATUS 4.17

5. INSTRUMENT GSE AND AIV INTERFACES .....

5.1. INSTRUMENT GSE DESCRIPTION 5.1

5.1.1. Bench Test Equipment 5.1

5.1.2. GSE for Integration with PLM OCOE 5.3

5.1.3. Mechanical Ground Support Equipment 5.3

5.1.4. Self-Contained Special Test Equipment 5.3

5.2. INSTRUMENT GSE INTERFACES 5.4

5.2.1. Interfaces with PLM OCOE 5.4

5.2.1.1. General 5.4

5.2.1.2. Stimulus/Feedback Equipment Interface 5.4

5.2.1.3. Interface with Instrument provided Data Processing Equipment 5.4

5.2.1.3.1. Physical / Electrical Interface 5.4

5.2.1.3.2. Protocol Interface 5.4

X2.1.4. Measurement Data Evaluation 5.6
5.2.1.4.1. Instrument Measurement Data Format Definition.. ..... 5.6
5.2.1.4.2. Reference Data Presentation.. ..... 5.7
5.2.1.4.3. Data Comparison Requirements 5.7
5.2.1.4.4. Data Processing Algorithms 5.7
5.2.2. interfaces with the PLM On-Board Equipment 5.8
5.2.2.1. Test Harness and Connectors 5.8
5.2.2.2. Special Test Adapters (T-Junctions, Break-Out Boxes). 5.8
5.2.2.3. Stimuli Source Configuration / Arrangement Requirement.. ..... 5.8
5.2.3. Interfaces with Other PLM GSE 5.8
5.2.4. Interfaces with AIT and Launch Site Facilities 5.8
5.2.4.1. Mains Power 5.8
5.2.4.2. Cooling / Thermal Dissipation Requirements 5.9
5.2.4.3. Purging Gas Requirement& 5.9
5.2.4.4. GN_2 / LN_2 Supply.. ..... 5.9
5.2.4.5. Test Chamber Wall Feed-Through Panels 5.9
5.2.4.6. Public Data Net Communication Requirements 5.9
5.2.4.7. Physical Interfaces 5.9
5.3. INSTRUMENT GROUND OPERATION REQUIREMENTS 5.10
5.3.1. General 5.10
5.3.2. Command and Control Sequences 5.10
5.3.2.1. Ambient Conditions 5.11
5.3.2.2. Thermal Vacuum Conditions 5.11
5.3.3. Hazards / Precautions 5.11
5.4. INSTRUMENT ACCEPTANCE AT AIT SITE 5.12
5.4.1. Unpacking/Packing and Handling Requirements 5.12
5.4.2. Incoming Inspection 5.12
5.4.3. Instrument Self-Compatibility Test 5.13
5.5. INTEGRATION ON METOP 5.14
5.5.1. Pre-Integration 5.14
5.5.2. Mechanical / Thermal Integration 5.14
5.5.3. Electrical Integration and IST's 5.16

5.5.4. Integration of GSE 5.17

5.5.4.1. Integration of GSE with the Flight Equipment 5.17

5.5.4.2. GSE Integration with PLM OCOE 5.17

5.6. INSTRUMENT OPERATION CONSTRAINTS DURING PLM AND SATELLITE SYSTEM TESTS 5.18

5.6.1. System Environmental Test Levels 5.18

5.6.1.1. Structural Tests 5.18

5.6.1.2. Thermal Tests 5.18

5.6.1.3. EMC/RFC Tests 5.18

5.6.2. Function and Performance Tests 5.19

5.6.2.1. System Functional Tests (SFT) 5.19

5.6.2.2. Special Performance Test (SPT) 5.19

5.6.2.3. Abbreviated Functional Tests (AFT) 5.19

5.7. INSTRUMENT CONSTRAINTS ON GROUND ENVIRONMENTAL CONDITIONS 5.20

5.7.1. AIT Site 5.20

5.7.2. Launch Site 5.20

5.7.3. Transportation 5.20

5.7.4. Storage 5.20

5.8. LAUNCH CAMPAIGN 5.21

5.8.1. Launch Preparation 5.21

5.8.2. Red Tagged Items 5.21

6. PRODUCT ASSURANCE .....

6.1. CLEANLINESS / CONTAMINATION 6.1

6.1.1. Deposited Contamination Level 6.1

6.1.2. Integration Facilities 6.1

6.1.3. Instrument Aperture Protection 6.1

6.1.4. Purging 6.1

6.1.5. Space Conditioning 6.2

6.1.6. Contamination Witness Plate 6.2

6.1.7. Decontamination Features / Heaters 6.2

6.1.8. Instrument Bagging.. ..... 6.2

6.2. FAILURE PROPAGATION THROUGH THE INTERFACES 6.3

6.3. SAFETY REGULATIONS 6.4

This document has been elaborated by MATRA MARCONI SPACE along with DORNIER.

1. GENERAL INFORMATION

BLANK

1.1. GENERAL

1.1.1. Purpose of the Document

This document is the SEM-2 Instrument Interface Control Document. It deals with the interface definition between the instrument and the METOP satellite.

The ICD document forms the unique formal definition on engineering, ground and flight operations for the METOP programme, specifying the binding requirements between ESA and the Instrument' Supplier. It is configuration controlled by the METOP project team and formally signed off by ESA, the Instrument Supplier and the METOP prime contractor.

As a single point control of the technical and programmatic interfaces, the ICD:

- Defines the resources allocated to the instrument.
- Defines the detailed mechanical, thermal and electrical interfaces between the instrument and the satellite.
- Defines the design verification programme which shall be implemented to demonstrate compliance with the METOP / SEM-2 interface requirements.
- Defines the detailed mechanical, electrical and protocol interfaces between the instrument ground support equipment and the METOP PLM ground support equipment.
- Defines the operational interface applicable during ground, launch and flight phases.

The objective of the ICD is to ensure that :

- The instrument is designed, built and verified within the constraints imposed by the overall payload complement, satellite and launch vehicle,
- The satellite Prime Contractor is able to design, build and verify the satellite in such a manner that all instruments can be successfully integrated into the system,
- The spacecraft system can be successfully launched and operated to achieve the mission objectives of the METOP programme.

1.12. Documentation

In cases of conflict between the following applicable documents and the present ICD. the agreement or definition in this SEM-2 ICD shall govern.

1.1.2.1. Applicable Documentation

AD 1. METOP Product Assurance Requirements for NOAA Instruments
Ref. MO-RS-ESA-PA-0065

AD2. Void

AD3. Satellite Thermal Model Requirement Specification, Ref. MO-RS-MMT-SY-0009.

AD4. Electromagnetic Interference Characteristics. Measurement of, MIL-STD-462C.

AD5. NOAA Instrument GSE-to-METOP Interface Requirements, Ref. GSFC S-480-9 1.

AD6. SEM-2 instrument Thermal Interface Mathematical Model Report, Ref. SAI-RPT-086.

AD7. SEM-2 Instrument Thermal Interface Mathematical Model (Ref. TBD_{MET}).

AD8. PLM EGSE Internal Interface Control Document, Ref. MO-ID-DOR-PM-0018.

AD9. Interface Control Drawing, SEM-2 Total Energy Detector (TED), Ref. 6384-D-TED-044D.

AD10. Interface Control Drawing. SEM-2 MEPED, Ref. D-6400.

AD11. Interface Control Drawing, SEM-2 Data Processing Unit (DPU), Ref. D-6393.

AD12. Thermal Interface Control Drawing (TED), Ref. D-7130.

AD13. Thermal Interface Control Drawing (MEPED), Ref. D-7129.

AD14. Thermal Interface Control Drawing (DPU), Ref. D-71 3 1.

AD15. NOAA Instrument GSE-to-METOP Interface Requirements, Ref. GSFC S-480-91.

AD16. Ni-63 Source Test Fixture Assy, Ref. C-71 38.

AD17. Long Term Storage Plan and Shipping Instructions for the TIROS SEM-2, Ref. TIR-TP- 102.

AD18. DPU BCU / SEM STC, Ref. D-6771.

AD19. MEPED BCU, Ref. D-6668.

AD20. TED BCU. Ref. 6699.

AD21. Test Procedure - TIROS SEM-2 Limited Perform&e Test, Ref. TIR-RTP-145

1.1.2.2. Reference Documentation

RD1. SEM-2 Technical Specification, Ref. SEL 86-1. dated February 1987

RD2. Performance Assurance Requirements for the NOAA-K, L & M SEM Ref. SEL 86-2. dated February 1987

RD3. ATN-K,L,M General Instrument Interface Specification Ref. IS-3267415, Rev. C, dated October 1991

RD4. Unique Interface Specification for SEM-2 Ref. IS-3267400. Rev. B, Dated July 1993.

RD5. Commands, Housekeeping and Status Monitors, and Data Output Format for SEM-2 Ref. TIR-ENG-101

RD6. Requirements for the Data Acquisition Block for NOM Instruments, Ref. MO-RS-DOR-PM-0025

RD7. Test Procedure - TIROS SEM-2 Comprehensive Performance Test, Ref. TIR-RTP-141

RD8. Test Procedure - TIROS MEPED Comprehensive Performance Test. Ref. TIR-RTP-139

RD9. Test Procedure - TIROS TED Comprehensive Performance Test, Ref. TIR-RTP- 138

1.1.3. Acronym List

AD	Applicable Document
A-DCS	Advanced Data Collection System
AGC	Automatic Gain Control
AIT	Assembly, Integration & Test
AIV	Assembly, Integration & Verification
AMSU-Al	Advanced Microwave Sounding Unit 1
AMSU-A2	Advanced Microwave Sounding Unit 2
ARGOS	Meteorological Data Collection and Location System
ASCAT	Advanced Wind Scatterometer
AVHRR/3	Advanced Very High Resolution Radiometer
BOL	Beginning of Life
C&C	Command & Control
CAM	Coarse Acquisition Mode
CCU	Central Computer Unit (SVM)
CDEM	Continuous Dynode Electron Multiplier (SEM-2)
CFI	Customer Furnished Instrument
CRA	Combined Receive Antenna (A-DCS, SARR, SARP-3)
DBU	Digital Bus Unit
DC	Direct Current
DSPG	Distributed Single Point Grounding
DTA	DCS Transmit Antenna
EGSE	Electrical Ground Support Equipment
EMC	Electromagnetic Compatibility
EMI	Electromagnetic Interference
EOL	End of Life

FAM	Fine Acquisition Mode
FEM	Finite Element Model
FMECA	Failure Modes, Effects and Criticality Analysis
FMU	Formatting and Multiplexing Unit
F O V	Field of View
FPM	Fine Pointing M o d e
Gbit	Gigabits
GNSS	Global Navigation Satellite System
GOME-2	Global Ozone Monitoring Experiment
GRAS	GNSS Receiver for Atmospheric Sounding
GSE	Ground Support Equipment
H/W	Hardware
HIRS/4	High Resolution Infra-Red Radiation Sounder
HK	House Keeping
HRPT	High Resolution picture Transmission
I/F	Interface
IASI	Infra-red Atmospheric Sounding Interferometer
ICD	Interface Control Document
ICU	Instrument Control Unit
IST	Integration System Test
kbps	kilobits per second
KLM	NOM K, L. M series of satellites
LEOP	Launch and Early Orbit Phase
LRPT	Low Resolution Picture Transmission
Mbps	Megabits per Second
MCMD	Macro command
MGSE	Mechanical Ground Support Equipment
MHS	Microwave Humidity Sounder
MIL	Military (standard)
N/A	Not Applicable
NIU	NOAA Instrument Interface Unit
OBDH	Onboard Data Handling System
OCM	Orbit Control Mode
OCOE	Over Check-Out Equipment
OMI	Ozone Monitoring Instrument

P/F	Platform
P/L	Payload
PA	Product Assurance
PCU	Power Conversion Unit
PLM	Payload Module
PMC	Payload Module Computer
RD	Reference Document
RF	Radio Frequency
RFC	Radio Frequency Compatibility
RFF	RF Filter
rms	root mean square
rpm	round revolutions per minute
RRM	Rate Reduction Mode
Rx	Receive ; Receiver
S&R	Search and Rescue
S/C	Spacecraft
S/L	Satellite
S/S	Subsystem
S/W	Software
SARP-3	Search and Rescue Processor
SARR	Search and Rescue Repeater
SEM-2	Space Environmental Monitor
SLA	S&R L-band Tx Antenna
SVM	Service Module
TB/TV	Thermal Balance / Thermal Vacuum
TBC	To be confirmed
TBD	To be defined
TC	Telecommand
TCU	Thermal Control Unit
TM	Telemetry
TT&C	Tracking, Telemetry, and Telecommand (LEOP, Emergency, and Stand-by)
Tx	Transmit, Transmitter
YSM	Yaw Steering Mode

1.2. INSTRUMENT PRESENTATION

1.2.1. General

(For information only)

Instrument Name	SEM-2 Space Environmental Monitor-2.
Classification	*Charged* Particle Spectrometer

The Space Environmental Monitor (SEM) is a multichannel charged-particle spectrometer, which senses the flux of charged particles from the Sun ionized plasma (at the satellite altitude) and contributes to the solar terrestrial energy knowledge.

SEM consists of three major components:

- Total Energy Detector (TED)
  TED uses eight. programmed, swept ekctrostatic curved-plate analyzers with continuous dynode electron multipliers (CDEM) to select the particles type and energy.
- Medium Energy Proton and Electron Detector (MEPED)
  MEPED has two sets of proton and electron telescopes and four omnidirectional detectors.
- Data Processing Unit (DPU).
  The DPU provides timing and control, analogue and digital multiplexing, particle detector data processing, A/D conversion. data and command processing and is the electrical interface between TED and MEPED and the satellite. The DPU includes redundant micro-processors (A/B).

1.2.2. Scientific Objectives

(For information only)

TED

The TED measures electron and proton fluxes in the 0.05 to 20 keV energy range (see Figure 1.2.2/1). Measurements are related to j (E, alpha), the differential directional energy flux, found in the number of protons and electrons in units of number per (m^2-s-Sr-keV).

Two independent measurements of the particle flux are made at 0 and 30 deg. from the local vertical. The total energy is divided in two ranges : *0.05* to 1 keV and 1 to 20 keV. The TED also measures the maximum differential energy flux density and the energy at which it occurs for each direction and type (electron and proton).

MEPED

The MEPED provides both directional and omni-directional measurements.

The directional sensors, called telescopes, make independent measurements of the particle types in six energy ranges from 30 to greater than 6900 keV for protons, and three energy thresholds from 30 to 300 keV for electrons. Directional measurements are made near the zenith direction and 90 deg. off nadir

The omnidirectional sensors measure proton energy in four thresholds from 16 to 140 MeV. Each sensor consists of a dome of moderating material which absorbs energy from the particle (and so sets the detection level), a silicon solid state detector, a pre-amplifier, and a level comparator.

Low Energy - Channel Width = 37 %			High Energy - Channel Width = 37 %		
Channel No.	Energy Range (keV)	Centre Energy (keV)	Channel No.	Energy Range (keV)	Centre Energy (keV)
1	0.050 - 0.073	0.061	9	1.000 - 1.454	1.227
2	0.073 - 0.106	0.089	10	1.454 - 2.115	1.784
3	0.106 - 0.154	0.130	11	2.115 - 3.075	2.595
4	0.154 - 0.224	0.189	12	3.075 - 4.472	3.774
5	0.224 - 0.325	0.274	13	4.472 - 6.503	5.488
6	0.325 - 0.473	0.399	14	6.503 - 9.457	7.980
7	0.473 - 0.688	0.580	15	9.457 - 13.753	11.605
8	0.688 - 1.000	0.844	16	13.753 - 20.000	16.877

Figure 1.2.2/1 : Energy Channel Characteristics of the TED Electro-Static Analyzers

1.23. Functional Description

The SEM-2 block diagram is illustrated in Figure 1.2.3/1.

1.23.1. Total Energy Detector (TED)

The TED consists of eight Electro-Static Analyzers (ESA), Pulse Height Discriminators (PHD), and In-Flight Calibrator (IFC), two high voltage (HV) supplies, a sweep voltage supply and housekeeping circuits.

A particle (proton, ion or electron) enters an entrance of an ESA If the particle has the right charge (+ or -) and energy, it passes through the ESA to the Continuous Dynode Electron Multiplier (CDEM). The CDEM makes a pulse that is processed by the PHD, that sends a logic pulse to the DPU.

1.232. Medium Energy Proton Electron Detector (MEPED)

The MEPED consists of two proton telescopes (each containing two solid state detectors - SSD). two electron telescopes (each containing a solid state detector), four omnidirectional sensors (each containing one solid state detector), charge sensitive pre-amplifiers, analog signal processors, proton and electron coincidence logic, in-flight calibrator, low voltage regulator, SSD bias supply and analog telemetry.

A charged particle enters a SSD where it releases charges from the crystal until its energy is gone. The amount of charge released is proportional to the energy deposited in the crystal. The charge is collected by a charge sensitive pre-amplifier, which converts the charge to a voltage pulse. After passing through an analog signal processor circuit, that shapes the pulse by pole-zero cancellation, single differentiation, double integration and baseline restoration, coincidence logic separates the pulses into the various channels for counting by the DPU.

1233. Data Processing Unit (DPU)

The DPU interfaces with and controls the TED and MEPED. It performs the following tasks :

- receives commands from the satellite and configures the TED and MEPED accordingly,
- controls the In-Flight calibration of the sensors,
- provides digital, bi-level and analog output to the spacecraft telemetry,
- performs data accumulation from the sensors
- reads various SEM-2 analog monitors

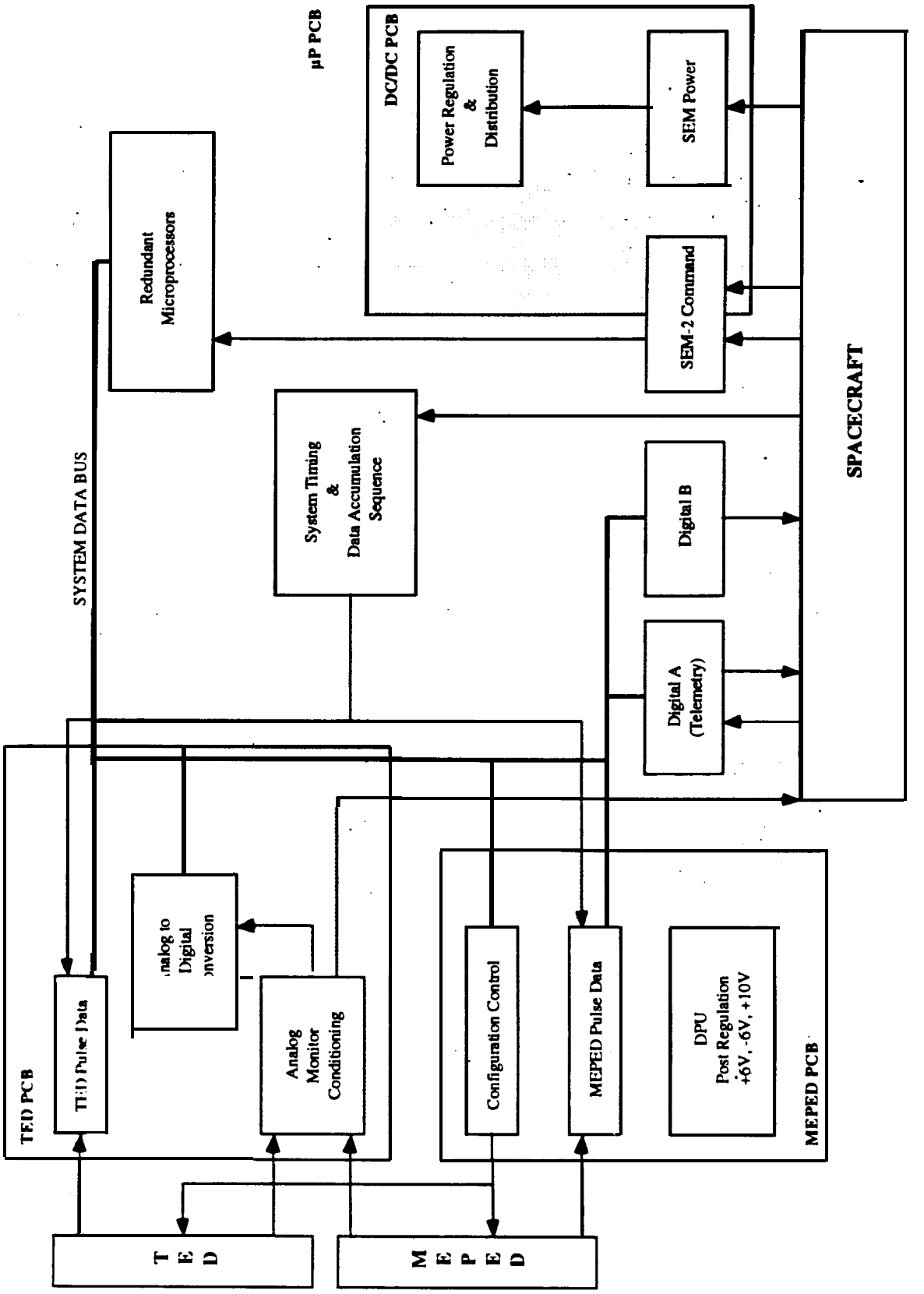

Figure 1.2.3/1: SEM-2 Functional Block Diagram

1.3. METOP SYSTEM OVERVIEW

13.1. Spacecraft Architecture Concept

(For information only)

The METOP mission consists of a geocentric, three-axis stabilized spacecraft placed into a Sun-synchronous orbit around the Earth. It is built around a primary structure consisting of :

- a service module (SVM), which provides all standard service elements
- an upper payload module (PLM) that accommodates the different instruments and corresponding electronic equipments.

The service module is a box-shaped structure, that interfaces with the launch vehicle at the bottom and with the payload module at the top.

The payload module provides the main supporting structure and external panels on which are mounted the payload instruments. It also provides internal accommodation for both the payload support systems and the instrument electronic units.

The METOP satellite in-orbit configuration is illustrated in Figures 1.3.1/1 and 1.3.1/2.

The SEM-2 interfaces with the following PLM units :

- the NOM Instrument Interface Unit (NIU) provides all command and control interfaces to the SEM-2, i.e. configuration and mode switching (commands), command verification, housekeeping telemetry acquisition, and clock and time management. The NIU also acquires the measurement data from the instrument.
- the Power Conversion Unit (PCU) provides the SEM-2 with the regulated buses.
- the Thermal Control Unit (TCU) provides heater power supply when the instrument requires heat.

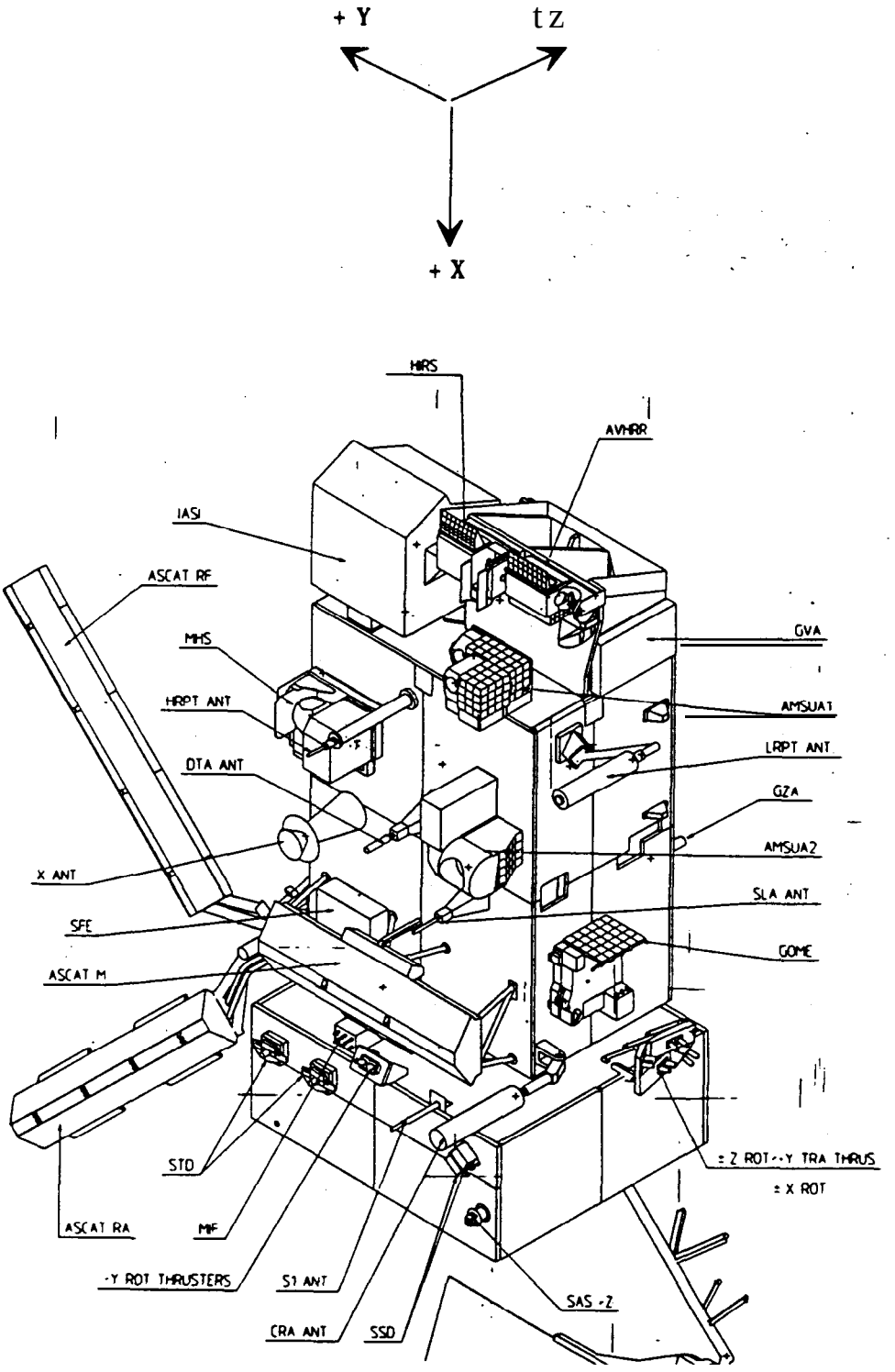

WARNING : MAY BE SUBJECT TO CHANGE

Figure 1.3.1/1 : METOP Satellite Overall Configuration (For Information Only)

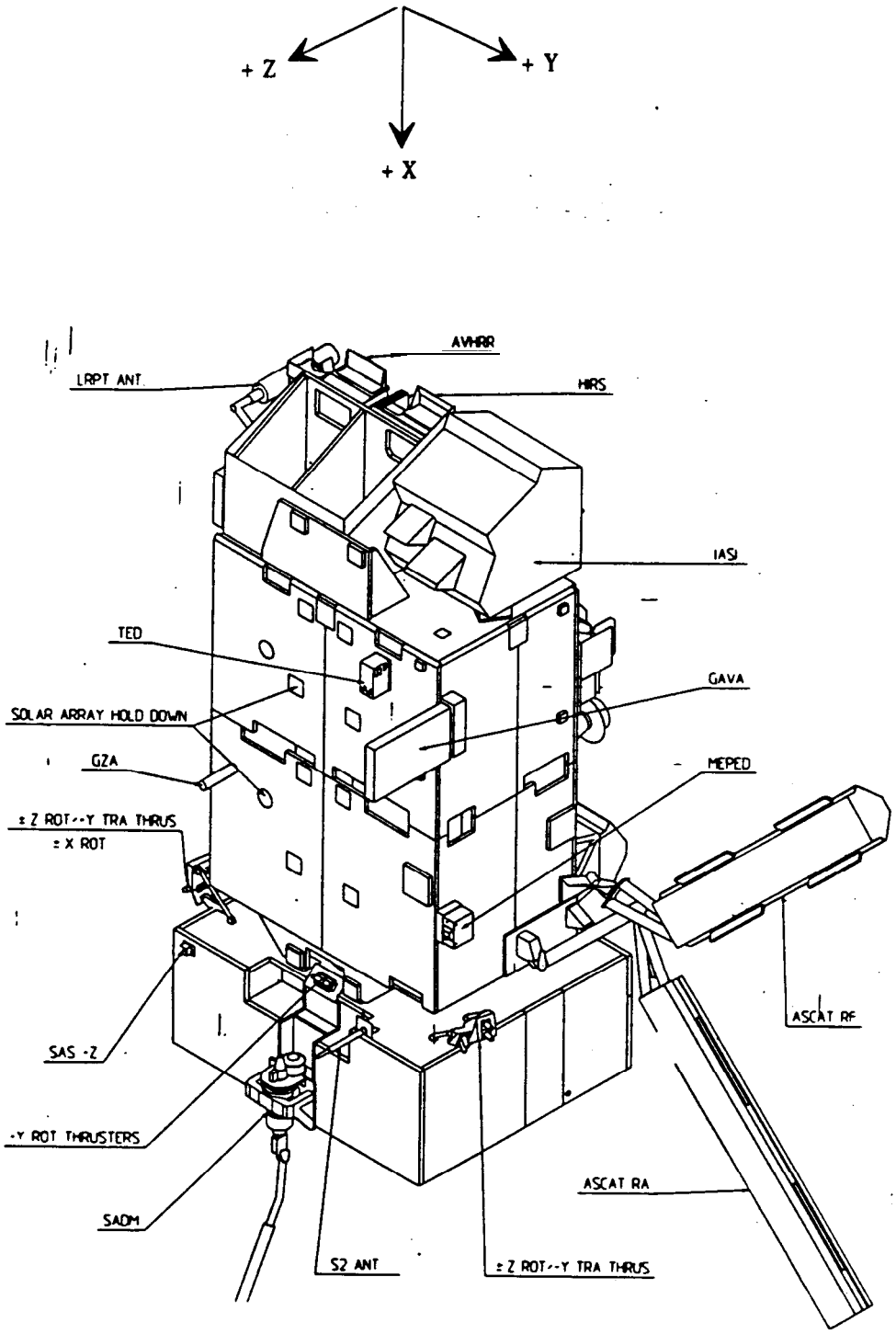

WARNING : MAY BE SUBJECT TO CHANGE

Figure 1.3. 1/2 : Back View of the Satellite (For Information Only)

TBD NET

WARNING : MAY *BE SUBJECT* TO *CHANGE*

Figure 1.3. IN : Internal Lay-Out (For information Only)

133. METOP Reference Frames

133.1. Satellite Reference Frame

The METOP satellite coordinate system is defined as follows (Spacecraft Absolute' Reference Frame $(O, X_s, Y_s, Z_s) F_s$) :

- 0 is located within the spacecraft to launcher separation plane, at the centre of theattachment ring,.
- The Xs-axis is perpendicular to this separation plane and oriented from the spacecraft towards the launch vehicle,
- The Zs-axis is the normal-out of the surface that carries the stowed solar array,
- The Ys-axis completes the right-handed orthogonal reference frame.

'This reference is illustrated in Figure 1.3.2/1.'

During normal payload operations, the (+X)-axis will be closely aligned to the orbit positive normal direction. the (-Y)-axis will be closely aligned to the METOP velocity vector and the (-Z)-axis will be closely aligned to the local downward direction (nadir)[1].

13.23. Instrument Reference Frame

The following is a requirement for the definition of the instrument reference frame. The frame specific to the SEM-2 is defined in § 2.1.3.2.

The following frames shall be referred to on all drawings and any finite element description.

1.3.2.2.1. SEM-2 TED and MEPED Sensor Reference Frames

The SEM-2 TED and MEPED sensors shall have a right handed orthogonal co-ordinate reference system $(X_{TED}, Y_{TED}, Z_{TED}) F_{TED}$ and $(X_{MEPED}, Y_{MEPED}, Z_{MEPED}) F_{MEPED}$ and it shall be defined such that :

- the origin shall be physically located on an accessible, identifiable instrument exterior feature (e.g. the centre of one mounting hole, at the insuument baseplate level)
- the axes being ideally aligned with the X_S, Ys. Zs spacecraft axes.

1.3.2.2.2. SEM-2 DPU Intemally Mounted Unit Reference Frame

The SEM-2 DPU internally mounted units shall have a right handed orthogonal co-ordinate reference system $(U_{SEM\text{-}DPU}, V_{SEM\text{-}DPU}, W_{SEM\text{-}DPU}) F_{SEM\text{-}DPU}$ and it shall be defined such that :

---

[1] For information, the correspondence between the METOP reference axes and TIROS reference axes is :
Xs METOP = Z TIROS Ys METOP = Y TIROS Zs METOP = - X TIROS

- the origin shall be physically located on an accessible, identifiable instrument exterior feature (e.g. the centre of one mounting hole, at the unit baseplate level)
- the U, V instrument axes define the plane that contains the unit mounting feet.
- the W axis is normal to this datum plane.

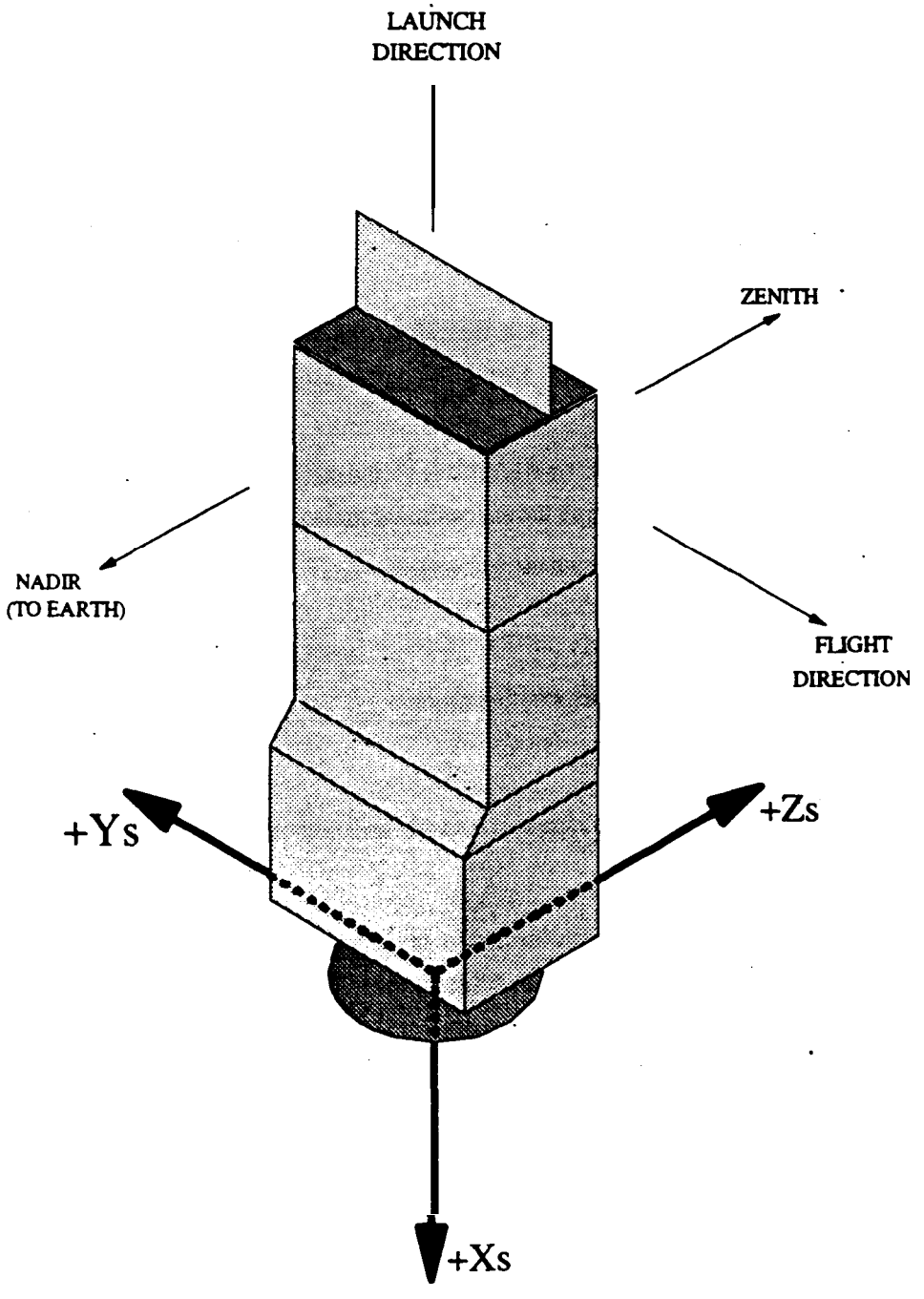

Figure 1.3.2/1 : Satellite Reference Frame

133. Orbital Parameters

133.1. Reference Orbit

METOP will be placed into the following reference orbit :

- Type :	sun-synchronous
- Semi-major axis :	7197.939 km
- Repeat Cycle :	5 days (14 + 1/5 orbits per day)
- Local Solar Time :	09:30 A.M. descending node

The maximum solar aspect angle for this orbit is 60.5 deg. (the solar aspect angle is defined as the angle between the satellite to Sun line and the normal to the orbital plane).

1.3.3.2. Drift Orbit

For METOP-1, the previous orbit will be reached after. a 6-month (TBC_{MET}) drifting phase (dual launch), from an initial polar orbit (close to the Sun-synchronous one) with a local solar time around 10:00 AM. descending node.

The maximum solar aspect angle for this orbit is 67.0 deg. (the solar aspect angle is defined as the angle between the satellite to Sun line and the normal to the orbital plane).

METOP-2 will be directly launched into the reference orbit.

13.4. Satellite Mission Phases and Operations

13.4.1. Mission Phases

During its lifetime, the satellite is operated through the following mission phases :

- Launch Phase

  The proper launch phase begins at the instant of switching the power subsystem to on-board batteries before lift-off and ends at satellite/launch vehicle separation.

- Acquisition Phase

  This phase starts at the end of the launch phase and ends once the satellite has acquired its operational attitude and orbit with its appendages deployed. An initial acquisition sequence leading to a system secured state, is followed by a final acquisition period.

- Commissioning Phase

  This phase starts once the attitude and orbit have been acquired and covers the time that subsystems and instruments are checked out. It ends when the payload is operational for the nominal orbit.

For METOP-1, it starts when the satellite is still drifting to achieve the nominal local solar time of 09:30.

- Routine / Operational Phase

This phase starts at the end of the commissioning phase and covets the time when the instruments are operational and the times when orbit maintenance manoeuvres are performed.

1.X4.2. Satellite Operational Modes

This section describes the satellite operational modes and the corresponding pointing performances.

1.3.4.2.1. Nominal Operational Mode

The nominal operational mode for METOP SVM is the Yaw Steering Mode (YSM[2]). During this mode, the PLM is in its Operable Mode : the instruments can be nominally operated through their measurement, heater, calibration... modes, and measurement data are transmitted to the ground.

The characteristics of the satellite nominal operational mode are the following :

Nominal Mode (YSM)			
Commanded Pointing	-Zs	Pointing towards nadir	
	-Ys	Pointing towards the velocity	
Pointing Performances (According to ESA Summation Rules)			
Absolute Pointing Error AVHRR/3 Line of Sight (TBC_{MET})	xaxis f0.17 deg.	Yaxis ± 0.17 deg.	zaxis ± 0.22 deg.
Pointing Knowledge All Instrument Interface Reference Frames	xaxis ± 0.17 deg.	Y axis f0.17 deg.	zaxis ± 0.22 deg.
Absolute Rate Error (Max, 0-4 Hz)	X, Y. Z axes ± 0.005 deg./s TBC_{MET}		

1.3.4.2.2. Orbit Control Modes

The previous performances are not guaranteed during large amplitude orbit control manoeuvres for altitude maintenance or inclination maintenance. Those are performed in SVM Orbit Control Mode (OCM) or Fine Control Mode (FCM).

---

2 During the Yaw Steering Mode (YSM). the satellite Z axis (yaw) is steered according to sinusoidal function over the orbit with an amplitude of about 4 deg.

During those modes, the PLM is still operable and the instrument nominal operations are not stopped, even if the generated measurement data may be corrupted. This is not true for the initial orbit corrections, for which the PLM and the instrument status are in LEOP / Off Modes.

Altitude Maintenance

For altitude maintenance during the routine phase (in-plane manoeuvres), the commanded attitudeis similar to the one in the nominal operating modes (YSM or local orbital reference frame), but with different pointing performances:

Orbit Control Mode : Altitude Maintenance		
Commanded Pointing	-Zs	Pointing towards nadir
	. -Ys	Pointing towards the velocity
Pointing Performances		
Absolute Pointing Error All Instrument Interface Reference Frames	X, Y, Z axes ± 2 deg. TBC_{MET}	

Inclination Maintenance

For inclination maintenance during the routine phase (out-of-plane manoeuvres), the satellite body is rotated by 90 deg. ± 20 deg. around the yaw axis (Z-axis), and by ± 20 deg. around the X-axis (local orbital reference frame), and a thrust normal to the orbit plane is performed. The rotation direction can be both clockwise and anti-clockwise and occurs around a node of the orbit.

The overall manoeuvre (rotation, thrust and back rotation) is performed during the eclipse phase of the orbit

During these manoeuvres, the nominal mode is stopped for typically 4 orbits, but the duration from the beginning of first rotation to the end of back rotation is less than 1800 sec.

The pointing performances are then :

Orbit Control Mode : Inclination Maintenance Pointing Performances	
Absolute Pointing Error All Instrument Interface Reference Frames	X. Y, Z axes ± 2 deg. TBC_{MET}

1.3.4.2.3. Acquisition Modes

The acquisition modes encompass all actions leading to a stabilized Earth attitude, including deployment of all major appendages.

The corresponding SVM modes are the Rate Reduction Mode (RRM), the Coarse Acquisition Mode (CAM), the Fine Acquisition Modes (FAM1, FAM2 and FAM3) and the Fme Pointing Mode (FPM).

During these modes, the PLM is in the Lift-Off Mode and then LEOP Mode. In general, all instruments are switched off.

Once the satellite attitude is stabilized, the pointing performances are the following (local orbital reference frame) :

Acquisition Modes			
Commanded Pointing	-Zs	Pointing towards nadir	
	-Ys	Pointing towards the velocity	
Pointing Performances			
Absolute Pointing Error All Instrument Interface Reference Frames	X axis ± 5.0 deg TBC_{MET}	Yaxis ± 5.0 deg. TBC_{MET}	Z axis ± 7.5 deg. TBC_{MET}
Absolute Rate Error (Max, 0-4 Hz)	x, Y, z axes ± 0.05 deg./s TBC_{MET}		

Note : The mode sequence up to a stabilized satellite attitude may last up to 3500 sec.

1.3.4.2.4. Contingency Cases

In the event of detection of a satellite failure, several back up modes exist at PLM and / or SVM levels.

PLM Failure Cases

For failure at PLM level only, the corresponding PLM modes are the PLM Stand-By Mode, the PLM Fix Mode and the PLM Safe Mode, depending on the failure. All instruments are switched off.

The SVM is not affected and the nominal attitude is maintained (see § 1.3.4.2.1.)

SVM Failure Cases

For failure at SVM level, the PLM is forced to PLM Stand-By Mode, PLM Fix Mode or PLM Safe Mode, depending on the failure, and all instruments are switched off.

The SVM enters several modes that lead to a stabilized Earth pointing attitude: From an operational point of view, those modes are similar to the very first attitude acquisition that follows the separation from the launch vehicle, but with deployed appendages.

Once the satellite attitude is stabilized, the pointing performances are the same as those described in § 1.3.4.2.3. with similar delay performances up to a stabilized satellite attitude.

1.3.4.2.5. Safe Mode (Sun Pointing)

In addition to the previous back-up modes, an ultimate safety level is implemented on METOP. This so-called Safe Mode performs the minimal functions for satellite survival by maintaining a Sun-pointed attitude. During the Safe Mode, the PLM is in the PLM Safe Mode and all instruments are switched off.

The characteristics of such a mode are :

Safe Mode			
Commanded Pointing	+Zs	Pointing towards the sun	
	The attitude is not controlled but remains within the limits specified below		
Pointing Performances			
Absolute Pointing Error	Sun-lit phases	X axis ± 15 deg.	Yaxis ± 15 deg.
All Instrument Interface Reference Frames	shadowedphases	xaxis ± 20 deg.	Yaxis ± 20 deg.
	Delay between eclipse and Sun-lit performances : 500 s		
Absolute Rate Error (Max, 0-4 Hz)	The rate about any axis is controlled between 0 and ±0.1 deg./s. TBC_{MET} There is no commanded spin.[3]		

The transients to reach this final attitude may last up to one orbit. Transitions to this final attitude are undetermined.

[3] As a consequence. the (-Xs) side of the satellite, that nominally faces the cold space. may continuously face the [redacted] albedo during the safe mode.

[redacted]

1.4. INSTRUMENT OPERATIONAL MODES

1.4.1. Operational Constraints

To assure proper in-orbit operations of the SEM-2, certain practices are to be observed during the mission phases (see § 1.3.4.1.). These are :

a) On the ground, the SEM-2 initial configuration is the OFF state.

b) The SEM-2 can be operated at any time during the orbit drift phase.

c) Conflicting spacecraft command causes no damage to the SEM-2.

d) An initial 15-day outgassing period is required prior to powering the High Voltage units on.

e) The SEM-2 DPU must be turned on first and separately of TED and MEPED. The power-on sequence described in § 1.5.3. takes this into account

f) The nominal operating mode for SEM-2 is the ON Mode. There is no specific command and control requirement from the PLM during this mode.

g) The Calibration Mode for the SEM-2 instrument (TED and MEPED IFC) is typically done once a week.

h) In case of PLM failure, the clock / signal and power (10 & 28 V) may not be available at the instrument interfaces for a maximum duration of 36 hours.

i) The measurement dam acquisition of Digital A Data from SEM-2 may be corrupted in case of spacecraft failure (i.e. Data Enable and Clock interrupted and Sync. pulses present). In this case, the instrument shall be reset by ground command i.e. by powering down to Off Mode and following powering up the instrument to Measurement Mode.

1.4.2. Instrument Made Overview

1.4.2.1. SEM-2 Off Mode

During the SEM-2 Off Mode, the SEM-2 is unpowered. No service (telemetry, monitoring...) will be performed by the METOP satellite.

This Off Mode for SEM-2 is used :

- during the METOP launch and acquisition phases.
- during the METOP contingency cases (see § 1.3.4.2.4.).
- during the METOP safe mode (see § 1.3.4.2.5.).

The Switched TLM bus is available at the instrument interfaces only during the PLM Stand-By and Operable modes. The telemetered temperatures will be monitored only during these PLM modes.

All interface power buses and signals shall be available at the interfaces of the SEM-2 to exit this mode.

1.433. SEM-2 On Mode

This mode is defined as the normal operating mode of the SEM-2, with the instrument providing measurement data to the satellite.

In this mode, the SEM-2 is in the following configuration :

- the selected A or B micro-processor is powered
- the TED discriminators (Pulse Height Discriminators - PHD) are at the desired level, nominally the level 00
- the TED High Voltages are at the desired level. nominally the level 000.

A / B Microprocessor

SEM-2 operation is controlled by two redundant micro-processors, one of which is selected by ground command

The SEM-2 operation is identical regardless of the microprocessor system power configuration : either A or B or both. If only one micro-processor system is powered, then it must also be the selected system. A hardware interlock which prevents an unpowered µP system from controlling the system bus is incorporated in the SEM-2.

To minimize radiation damage to the unselected µP system that system will normally not be powered However the DPU may be run with both µP systems powered if desired.

1.4.23. SEM-2 Calibration Mode

The SEM-2 provides an In-Plight Calibration (IFC) for the MEPED and TED. The IFCs may be run separately or concurremly.

The MEPED IFC comprises two phases, Phase 0 and Phase 1. each lasting 192 seconds (i.e. 6 x 32 sec.). Phase 0 tests noise and low energy threshold levels for the telescopes. Phase 1 tests high energy thresholds.

The TED IFC also comprises two phases, Phase 0 and Phase 1. TED IFC Phase 0 (Pulse Height Discriminators PHD level measurement) comprises 4 segments, each lasting 8 seconds. TED IFC Phase 1 (Pulse Height Discriminators PHD Cycling Part) lasts 101.33 minutes, i.e. 192 x 32 seconds.

1.43. Cross Reference Between Instrument and PLM Modes

Phases	PLM	SEM-2	Comments
Launch and Acquisition Phases	Lift-Off Mode LEOP Mode	Off Mode	
Pre-Operational Phase	Stand-By	Off Mode	
Operational Phase	Operable	Any	
Orbit Control Manoeuvres	Operable	Off Mode	
	Stand-By	Off Mode	
Contingency Cases	Stand-By RX Safe	Off Mode	

1.5. INSTRUMENT LAUNCH AND IN-ORBIT OPERATIONS

The SEM-2 operational sequences, as used on METOP, are illustrated in Figure 1.5/1.

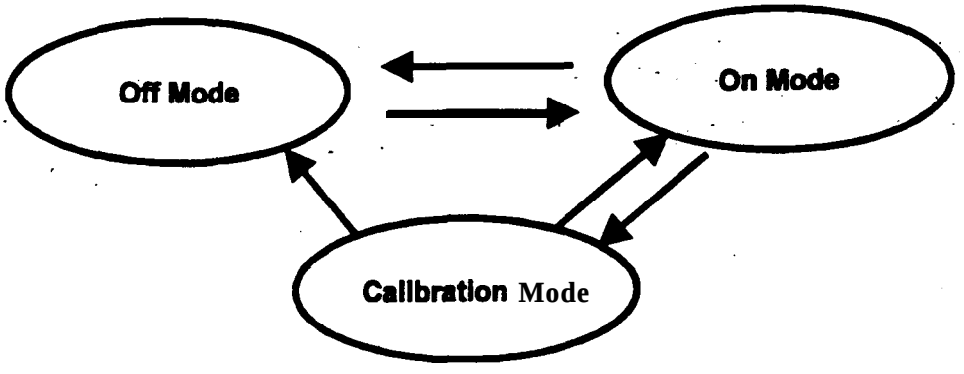

Figure 1.5/1 : SEM-2 Mode Operation Sequence Used on METOP

15.1. General

Instrument operational constraints are presented in § 1.4.1.

The minimum time between two consecutive commands is specified in § 3.2.2.. except as noted below.

SEM-2 telecommands are described in § 3.2.2.

The acknowledgement of the commands by the instrument is done with Digital B telemetry points as described in § 3.2.3.2 and § 3.2.4. When no Digital B telemetry point is available, the acknowledgement is done with the instrument Analog Housekeeping telemetry on the ground.

Instrument operations during tests are described in § 5.

1.5.2. Instrument Sequences to SEM-2 Off Mode

1.5.2.1. Nominal Sequence to Off Mode

The instrument switch-off sequence from any mode into Off Mode shall be as following :

1) Send MEPED IFC Off level command (C38) (Terminate any on-going IFC mode)
2) Send LEV LATCH command
3) Send TED IFC Off level command (C36)
4) Send LEV LATCH command
5) Send the p CDEM HV OFF level command (C4) (Proper power down sequence)
6) Send the LEV LATCH command.
7) Send the e CDEM HV OFF level command (C3)
8) Send the LEV LATCH command.
9) Send the SWEEP OFF level command (C2)

10) Send the LEV LATCH command
11) Send the TED LV OFF level command (C1)
12) Send the LEV LATCH command.
13) Send the MEPED LV OFF level command (C5)
14) Send the LEV LATCH command
15) Send the SEM OFF command.

Note : the timing between two consecutive commands is dealt within § -3.22.

1.5.22. Emergency Sequence to SEM-2 Off Mode

In case of emergency (including depointing), all SEM-2 power may be switched off by issuing :

1) SEM OFF command

This emergency switch-off sequence will be terminated within 50 ms.

Removal of the main power bus during SEM-2 On Mode is another way to switch the SEM-2 off.

However both the *SEM OFF* command and the removal of the main power bus will not directly (via hardware) affect the state of the MEPED low voltage, TED low voltage, TED sweep supply, TED electron CDEM HVPS and TED proton CDEM HVPS power control relays, all of which are placed in me OFF state by the DPU power-up initialization software.

Any of these supplies which are on when the SEM OFF pulse command is executed will turn on for a short period of time (<< 1 second) when the DPU is next turned on via the *DPU / µP A ON* or *DPU / µP B ON* pulse command. This does not harm the SEM-2.

15.23. Comments on Operations During the SEM-2 Off Mode

With the DPU off, only the following commands are processed by the SEM-2 :

- the *DPU / µP ON* commands (A/B)
- the *MEPED Bias On* commands
- *the µP A Select* and the *µP B Select* commands

No other commands are processed with the DPU off. The issuance of such commands will not cause any damage.

Note: To protect the SSDs, bias may be applied to the SSDs at all times, if desired even when the SEM-2 is off.

1.53. Instrument Sequences to SEM-2 On Mode

The SEM-2 instrument switch-on sequence from Off Mode into On Mode (independent of how the SEM-2 OFF mode was reached) shall be as following :

1) Send µP A SELECT or µP B SELECT command (Selection of the appropriate µP)

Note: Because selection is done by' a mechanical memory relay, this command need not be sent if the microprocessor to be selected is the same as that last used.

2) Send DPU/µP A ON or DPU/µP B ON command
(Selection of the appropriate DPU / µP On command)
3) Delay of 1 second
4) Send NOP level command (C42)
5) Send LEVEL LATCH command' (Execute)
6) Send MEPED LV ON level command (C 10) (Proper Power-on sequence)
7) Send LEVEL LATCH command
8) Send MEPED BIAS ON command
9) Send TED LV ON level command (C6)
10) Send LEVEL LATCH command
11) Send SWEEP ON level command (C7)
12) Send LEVEL LATCH command
13) Send e CDEM HV ON level command (C8)
14) Send LEVEL LATCH command
15) Send p CDEM HV ON level command (C9)
16) Send LEVEL LATCH command
17) Send µP A WD RESET or µP B WD RESET level command (C40 or C39)
(as appropriate)
18) Send LEVEL LATCH command

Note : the timing between two consecutive commands is dealt within § 3.2.2.

15.4. Sequences During SEM-2 On Mode

During the SEM-2 On Mode, any of the various commands may be issued as desired.

The *μP A SELECT, μP B SELECT, MEP BIAS ON, DPU / μPB ON, DPU / μPA ON,* and *SEM OFF commands are* implemented in hardware and are therefore executed immediately upon receipt.

All other commands are decoded and processed in software by the active microprocessor system. Software decoded commands are read and decoded e&y 0.2 seconds.

IFC ON commands enable the appropriate IFC. which will begin following of the next major frame sync. pulse. *TED CDEM HVPS Levels and PHD (Discriminator) Level* commands *are executed during the* TED sweep supply retrace sub-interval (the 9th of the 10 TED *0.2 second sub-intends).*

All other software decoded commands are normally executed immediately upon decoding, except that certain software decoded commands *received during an* IFC cycle are stored and executed following completion or termination of that IFC cycle.

The *μ PA WD RESET and μPB WD RESET commands are* decoded *and processed both in* hardware and in software. The appropriate watchdog status indicator (Digital B) is reset immediately upon receipt of *μ PA WD RESET or μPB WD RESET* command. The *active* microprocessor watchdog count (Digital A) is reset immediately upon software decoding of the appropriate *μP WD RESET* command.

Note that the Data Processing Unit must re-synchronise following a watchdog reset command (*μPA WD RESET or μPB WD RESET*), or when *the* active micro-processor system is changed (*μPA SELECT* sent with μPB active or *μPB SELECT* sent *with* μPA active). Thus, Digital A data will not be valid for two Major Frames following these commands.

1.5.5. Sequences for the SEM-2 Calibration Mode

The instrument sequence from SEM-2 On mode into Calibration Mode shall be as follows :

1) Send MEPED IFC On or TED IFC On level command

2) Send LEV LATCH command

The IFC is initiated by the first 32 second synchronisation pulse following the receipt by the instrument of the previous commands.

TED and MEPED IFC are totally independent of each other. They may be run concurrently, and either may be started, or terminated, while the other is running.

The termination of the IFC is accomplished by the instrument timing (MEPED 394 seconds, i.e. 12 x 32 seconds : TED : 6176 seconds, i.e. 193 x 32 seconds) or with the appropriate following command :

1) Send MEPED IFC Off or TED IFC Off level command

2) Send LEV LATCH command

Instrument commands received during an IFC is stored within the instrument for implementation at the completion of the IFC with the exception of the terminated commands previously &scribed :

- TED power supply on / off, CDEM HVPS control and PHD control commands are not executed while the TED is in the IFC mode. Such commands received during TED IFC will be stored and the TED, which would normally return to its pre-IFC state, will assume the commanded state following completion or termination, of the IFC cycle.
- A MEPED power off command received during MEPED IFC is stored and executed upon completion or termination of the IFC cycle.
- All other commands are executed as usual during TED and / or MEPED IFC.

2. MECHANICAL AND THERMAL INTERFACE DESCRIPTION

BLANK

2.1. GENERAL

2.1.1. Interface Definition

The interface definition for the instrument is the following :

Instrument	Satellite
Mechanical	
SEM-2 instrument comprising three (3) separate units : TED and MEPED units, externally mounted DPU, internally mounted within the PLM. All instrument protective covers and test plugs	Attachment bolts Head Bolt Washers Adjustment Shims Grounding straps Harness between SEM-2 units (see § 3.7)
Thermal	
Unit thermal control hardware for the externally mounted units (TED and MEPED) : Operational heaters specified, procured and accommodated internally by the Instrument Supplier. Control law (software requirement) to drive these operational heaters [1]. Thermistor accommodated internally. Thermal blankets	Externally Mounted Units (TED and MEPED) : - Thermal washers 1 & 2 - Thermal blankets attached to the METOP structure - Thermistor for operational temperature control (mounted internally by the Insuument Supplier) - Survival heaters and thermostats mounted externally to units. Internally Mounted Unit (DPU): Operational software controlled heaters and thermistors and thermostatically controlled survival heaters.

[1] On / off switching of these heaters, dependent on the temperature limits, is performed by the PLM TCU (no proportional control, see § 2.3).

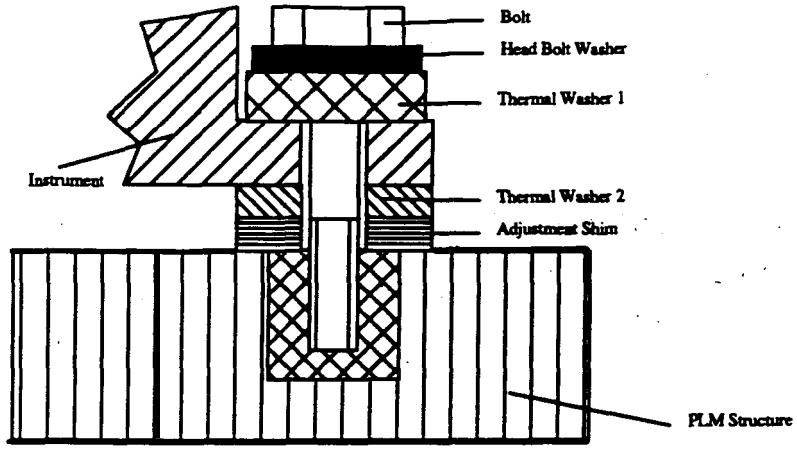

Figure 2.1.1/1 : Definition of Attachment Hardware (Generic Schematics)

2.1.2. Module / Unit Identification

The Part Number and Identification Code of the SEM-2 instrument are :

SEM-2 MEPED

1) Equipment Name :	SEM-2 MEPED
2) Purchase Order Or Contract Number :	N/A
3) Manufacturer Name :	Panametrics
4) Part No :	D-6630
5) ID Code :	Serial No. : XXXX
6) METOP ID Code	N/A

SEM-2 TED

1) Equipment Name :	SEM-2 TED
2) Purchase Order Or Contract Number :	N/A
3) Manufacturer Name :	Panametrics
4) Part No	D-6759
5) ID Code :	Serial No. : XXXX
6) METOP ID Code	N/A

SEM-2 DPU

1) Equipment Name :	SEM-2 DPU
2) Purchase Order Or Contract Number :	N/A
3) Manufacturer Name :	Panametrics
4) Part No :	FM : D-6802
5) ID Code :	Serial No. : XXXX
6) METOP ID Code	'N/A

The location of the labels giving these Part Numbers and Identification Codes are defined in the Mechanical Interface Control Drawing (See § 2.1.4.).

2.13. Reference Frames

2.13.1. Satellite Reference Frame

See § 1.3.2.1.

2.13.2. Instrument Reference Frame

The reference point for all mechanical and thermal data for each of the units is shown in the Interface Control Drawings (at the interface to the PLM structure, see § 2.1.4).

The SEM-2 TED and MEPED Instrument Interface Reference Frames, $F_{SEM\ TED}$, $F_{SEM\ MEP}$, with the origin being at the reference point, is as defined in the Mechanical Interface Control Drawing (see § 2.1.4.). The directions of the F_{SEM_i} axes are the same as the Spacecraft Reference Framk Fs.

The SEM-2 DPU Unit Interface Reference Frames, F_{SEM_DPU}, with the origin being at the reference point, is as defined in the Mechanical Interface Control Drawings (See § 2.1.4.1.).

2.1.4. Interface Drawings

2.1.4.1. Mechanical Interface Drawing

The SEM-2 instrument configuration and mechanical interfaces are illustrated in the following interface drawings :

- Interface Control Drawing, SEM-2 Total Energy Detector (TED), Ref. 6384-D-TED-044D-C (AD9)
- Interface Control Drawing, SEM-2 MEPED, Ref. D-6400-D (2 sheets, AD10)
- Interface Control Drawing, SEM-2 Data Processing Unit (DPU), Ref. D-6393-C (AD11)

These drawings are applicable with the following comments :

Interface Control Drawing, SEM-2 Total Energy Detector (TED), Ref. 6384-D-TED-044D

a) Dimensions are given in inches
b) Feet numbering, as in Figure 2.1.4.1/1.
c) Axis definition, as in Figure 2.1.4.1/1.
d) Reference Point is attachment #1.
e) Applicability of Notes:
1. and 2. : Not applicable (see 2.2.3.1.)
3. : Not applicable
4. : Not applicable (see 2.3.3.2.)
5. to 10. : Applicable
11. : Not applicable (see 2.3.2.1.1.)
12. to 14. : Applicable

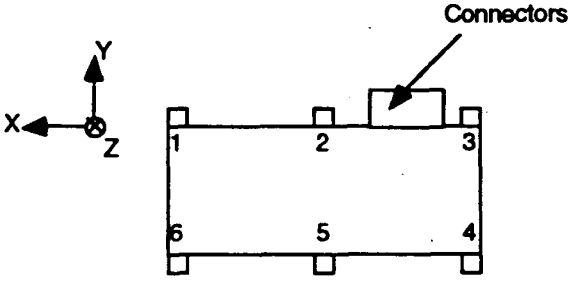

Figure 2.1.4.1/1 :
TW Axes and Feet Numbering

Interface Control Drawing, SEM-2 MEPED, Ref. D-6400

a) Dimensions are given in inches
b) Feet numbering, as in Figure 2.1.4.1/2.
c) Axis definition. as in Figure 2.1.4.1/2.
d) Reference Point is attachment #1.
e) Applicability of Notes :
1. and 2. : Not applicable (see 2.2.3.1.)
3. : Not applicable
4. : Not applicable (see 2.3.3.2.)
5. to 10. : Applicable
11. : Not applicable (see 2.3.2.1.1.)
12. to 14. : Applicable

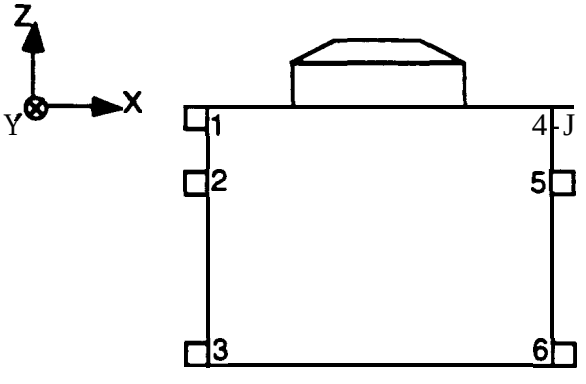

Figure 2.1.4.1/2 :
MEPED Axes and Feet Numbering

Interface Control Drawing, SEM-2 Data Processing Unit (DPU), Ref. D-6393

a) Dimensions are given in inches
b) Feet numbering, as in Figure 2.1.4.1/3.
c) Axis definition, as in Figure 2.1.4.1/3.
d) Reference Point is attachment #1.
e) Applicability of Notes :
1. and 2. : Not applicable (see 2.2.3.1.)
3. : Not applicable
4. : Not applicable (see 2.3.3.2.)
5. to 10. : Applicable
11. : Not applicable (see 2.3.2.1.1.)
12. to 13. : Applicable

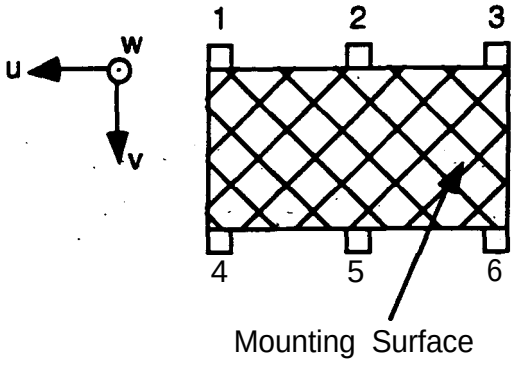

Figure 2.1.4.1/3 :
DPV Axes and Feet Numbering

2.1.4.2. **Thermal Interface Drawing**

The SEM-2 instrument thermal interfaces are illustrated in the following interface drawings :

- Thermal Interface Control Drawing (TED), Ref. D-7130 (2 sheets, AD12).
- Thermal Interface Control Drawing (MEPED), Ref. D-7129 (2 sheets, AD13).
- Thermal Interface Control Drawing (DPU), Ref. D-7131 (AD14).

These drawings are applicable with the following comments :

Thermal Interface Control Drawing (TED), Ref. D-7130

a) Dimensions are given in inches
b) Surface Thermo-Optical Properties, see § 2.3.4.2.2.
c) Operational (heater control) thermistor is $TBD_{MET/SEM}$ (provided by METOP).
d) Survival heaters and thermostats are not shown.
e) Applicability of Notes :
Sheet 1/2 - 1. to 4. : Applicable.
Sheet 2/2 - 1. to 5. : Applicable.
Sheet 2/2 - 6. : Not applicable (see § 2.3.3.1. and 3.4.2.)
Sheet 2/2 - 7. : Applicable.

Thermal **Interface Control Drawing (MEPED), Ref. D-7129**

a) Dimensions are given in inches
b) Surface Thermo-Optical Properties, see § 2.3.4.2.2.

c) Operational (heater control) thermistor is $TBD_{MET/SEM}$ (provided by METOP).

d) Survival heaters and thermostats are not shown.

e) Applicability of Notes :

Sheet 1/2 - 1. to 3. : Applicable.

Sheet 2/2 - 1. to 9. : Applicable.

Sheet 2/2 - 10. : Not applicable (see § 2.3.3.1. and 3.4.2.)

Sheet 2/2 - 11. : Applicable.

Thermal Interface Control Drawing (DPU), Ref. D-7131

a) Dimensions are given in inches

b) Surface Thermo-Optical Properties, see § 2.3.4.2.2.

c) The thermal hardware provided by METOP is not shown.

2.1.4.3. Field of View Interface Drawing

The SEM-2 instrument fields of view for the TED and MEPED units are illustrated in the interface drawings listed in § 2.1.4.1:

2.2. MECHANICAL INTERFACE DESCRIPTION

2.2.1. Physical Envelope

The SEM-2 instrument comprises two fully integrated externally mounted units and one internally mounted unit :

- The TED and MEPED, mounted to the external surface of the PLM- structure
- The DPU unit. mounted to the internal surface of the PLM structure.

The DPU unit can be accommodated in any direction on its (length x width) baseplate.

The maximum harness length allowed between the outside MEPED and TED units and the inside DPU unit is limited by their electrical performance requirements as defined far the harness (see § 3.7, TIROS length is 5 m). There is no proximity requirement between TED and MEPED.

The external unit dimensions are given below. The "base" dimensions are the maximum physical length in the specified direction and are from the envelope drawings. Thermal blanket and Velcro dimensions are estimates.

MEPED Dimensions

Dimension	Dimensions in mm					Comments
	Base	Thermal Blanket	Velcro for Thermal Blanket	connectors	Total	
Y axis (Velocity)	129.03	2.54	6.35	N/A	137.92	One thermal blanket layer
X Axis	277.37	5.08	N/A	N/A	282.45	Two thermal blanket. layers
Z Axis (Zenith)	252.48	N/A	N/A	S/C connectors excluded	252.48	Includes purge nipple, but not the connecting hose

TED Dimensions

Dimension	Dimensions in mm					Comments
	Base	Thermal Blanket	Velcro for Thermal Blanket	connectors	Total	
Y axis (Velocity)	187.96	5.08	N/A	SIC connectors excluded	193.04	Two thermal blanket layers; includes polarity and configuration plugs
X Axis	304.80	2.54	6.35	N/A	313.69	One thermal blanket layer
Z Axis (Zenith)	171.45	N/A	12.70	N/A	184.15	"Velcro" includes 10.80 mm for the aperture plate

DPU Dimensions						
	Dimensions in mm					
Dimension	Base	Thermal Blanket	Velcro for Thermal Blanket	Connectors	Total	comments
Length (u)	286.8	N/A	NJA	S/C connectors excluded	286.8	
Width (v)	266.7	N/A	N/A	N/A	266.7	
Height (w)	78.7	N/A	NJA	NJA	78.7	

The overall dimensions are defined without thermal stand-offs, which are METOP specific, and without connector savers.

The SEM-2 units do not have any deployable part.

Requirements on the SEM-2 TED vicinity : see § 3.8.4.

2.2.2. Field of View Definition

The SEM-2 contains two units which have field of view requirements : MEPED and TED. Both units have fixed fields of view as summarized in below :

- The MEPED 0 deg. Electron and Proton telescopes and the omni-directional detectors require a free access to the satellite anti-nadir direction. with conical fields of view.
- The MEPED 90 deg. Electron and Proton telescopes require a free access to the satellite anti-velocity direction, with conical fields of view.
- The TED 0 deg. and 30 deg. sensors require a free access to the satellite anti-nadir direction. The 30 deg. sensor field of view is inclined at 30 deg. from the anti-nadir direction towards anti-Sun.

Note : The SEM-2 units can view the Sun without damage, however any data accumulated whilst viewing the Sun would be invalid.

The field of view are defined in the following table :

(deg.)	Instrument FOV	Solar Exclusion FOV
MEPED : Conical Fields of View		
Proton Sensor (1)	± 15	± 25.0
Electron Sensor (1)	± 15	N/A
Proton Sensor (2)	± 15	± 25.0
Electron Sensor (2)	± 15	N/A
Omni-directional Sensors (1)	± 60	N/A
(1) : towards anti-nadir		
(2) : towards anti-velocity		
TED : Rectangular Fields of View		
0 deg. Sensors		
cross-t&k	± 5.0	N/A
along -track	± 8.5	N/A
30 deg. Sensors		
cross-track	f5.0	N/A
along -track	f8.5	N / A

2.23. Mass Properties

The mass properties of the SEM-2 instrument are given in the following table. The coordinate system used is the Instrument Interface Reference Frame for each of the units comprising the SEM-2 instrument : $F_{SEM-TED}$, $F_{SEM-MEP}$ and $F_{SEM-DPU}$.

2.23.1. Mass and Centre of Mass Location

The SEM-2 unit centre of gravity locations have been measured without the attachment bolts / washers or thermal stand-offs. Instrument to, METOP PLM interface connectors and thermal blankets are included.

SEM-2	Specified Mass	Centre of Mass Location With Respect to the Reference Point (± 05 mm)		
		$X_{SEM-2\ TED}$.(Sun)	$Y_{SEM-TED}$ (Anti-velocity)	$Z_{SEM-2\ TED}$ '(zenith)
TED	4.7	-127.2	-79.3	+86.5
		$X_{SEM-2\ MEP}$ (Sun)	$Y_{SEM-MEP}$ (Anti-velocity)	$Z_{SEM-2\ MEP}$ (Zenith)
MEPED	8.7	+134	+58.5	-60.0
		$U_{SEM-DPU}$ Length	$V_{SEM-DPU}$ Width	$W_{SEM-DPU}$ Height
DPU	4.6	-132.4	+129.7	-38.5
TOTAL	18.0 kg			

SEM-2 Mass Properties

The SEM-2 instrument shall not exceed the above specified mass for the METOP mission.

The SEM-2 unit mass shall be measured to an accuracy of ± 5 g.

The SEM-2 basic (best estimate) mass is (for information only) :

TED	4.491 kg
MEPED	8.301 kg
DPU	4.400 kg
Total	17.192 kg

2.2.3.2. Moments of Inertia

The SEM-2 moments of inertia about the centre of mass of the instrument are as follows.

SEM-2	Moments of Inertia (kg.m²) ± 5 %					
/Unit	I_{XX}	I_{YY}	I_{ZZ}	I_{XY}	I_{XZ}	I_{YZ}
TED	< 0.10	< 0.10	< 0.10	< 0.10	< 0.10	< 0.10
MEPED	< 0.10	< 0.10	c o . 1 0	co.10	< 0.10	< 0.10
DPU	< 0.10	< 0.10	< 0.10	< 0.10	< 0.10	< 0.10

SEM-2** Moments **of Inertia

Note : The moments of inertia are defined as follows :

$$\begin{bmatrix} I_{xx} & -I_{xy} & -I_{xz} \\ -I_{xy} & I_{yy} & -I_{yz} \\ -I_{xz} & -I_{yz} & I_{zz} \end{bmatrix} \quad \text{with :} \quad \begin{matrix} I_{xx} = \int (y^2+z^2)dm \\ I_{yy} = \int (x^2+z^2)dm \\ I_{zz} = \int (x^2+y^2)dm \end{matrix} \quad \text{and} \quad \begin{matrix} I_{xy} = \int xydm \\ I_{xz} = \int xzdm \\ I_{yz} = \int yzdm \end{matrix}$$

2.2.4. Instrument Mounting Attachments

2.2.4.1. Mounting Description

The SEM-2 TED and MEPED units are mounted using thermal stand-offs and multiple bolts through the unit baseplates.

The DPU unit is mounted to and conductively coupled to the internal surface of the PLM (level 2 panel F). It uses multiple bolts through the unit baseplate.

The following table describes the instrument mounting hardware :

Module / Unit SEM-2	Bolt Size	Instr. Mounting Hole Diameter (nun) (+0.10/-0)	Length (mm)	Torque (Nm)	Quantity
TED	M4 (TBC_{MET})	4.87 - 5.16	TBD_{Met}	TBD_{Met}	6
MEPED	M4 (TBC_{MET})	4.87 - 5.16	TBD_{Met}	TBD_{Met}	6
DPU	M4 (TBC_{MET})	4.87 - 5.16	TBD_{Met}	TBD_{Met}	6

Tolerances are specified in the interface drawings (see § 2.1.4.).

2.2.4.2. Mounting Hole Position and Reference Point (Hole)

The definition of the mounting holes and the instrument Reference Bolts for SEM-2 units are given in the Mechanical Interface Control Drawings (see § 2.1.4.).

2.2.4.3. Mounting Surface Characteristics

TED and MEPED Side	Surface Coplanarity	Within 0.254 mm
	Surface roughness of attachment face	N/A
	Total area of the mounting surface	Contact only through thermal stand-offs
DPU Side	Surface Coplanarity	Within 0.254 mm
	Surface roughness of attachment face	≤ 1.6 microns RA
	Total area of the mounting surface	conduclively coupled using thermal filler
METOP Side	Surface Flatness	LessthanO.l mm in 100 mm
	Surface roughness of attachment face.	≤ 1.6 microns R.A
	Shimming Accuracy for Flatness	Within 0.0254 mm

2.2.4.4. Instrument Location

The mounting surface is:-

TED +Z (Zenith) face of the PLM structure.

MEPED +Y (Anti-velocity) face of the PLM structure.

DPU Internally Mounted on the -Ys panel of the PLM.

2.2.4.5. Materials at Interfaces

Instrument Side TED & MEPED	Baseplate	6061-T6 Al
	Mounting Area Finish	Chromate Conversion Per MB-C-5541 Class 1 A
Instrument Side DPU	Baseplate	6061-T6 Al
	Mounting Area Finish	Chromate Conversion Per MIL-C-5541 Class 1 A
METOP Side	PLM Structure	Aluminium skin with a honeycomb core TBC_{MET}
	Attachment Bolts and Washers	Titanium bolts with stainless steel washers
	Thermal isolation stand-off material (MEPED and TED)	TBD_{Met}

2.2.4.6. Thermo-Elastic Interface

N/A.

2.2.4.7. Grounding Provisions

The DPU unit is directly grounded to the PLM structure through its attachments.

Grounding to the spacecraft structure for TED and MEPED is achieved by a METOP provided grounding strap.

The location of the grounding point is defined far TED and MEPED in the Mechanical Interface Control Drawing (see § 2.1.4. TBD_{MET}).

2.2.5. Accessibility

Accessibility to specific parts of the instrument shall be provided, when accommodated on METOP. The faces on which specific parts are accommodated are defined in the following table :

TED and MEPED Units

This table indicates the viewing direction from the instrument.

	Item	Instrument Side (METOP Ref. Frame)		Access Required
		TED	MEPED	
1	Electrical Connectors	+Ys	-Zs	During AIT activities
2	Connector Savers	+Ys	-Zs	During AIT activities
3	Connector dust caps	+Ys	-Zs	When the instrument is not in use.
4	Test connector	+Ys	-Zs	Only during instrument troubleshooting (not during PLM or system AIT activities)
6	Protective Covers	+Zs	+Zs +Ys	During all AIT activities, except TB/TV, vibration and EMC (TBC)
7	Purging Interface	N/A	-Zs	At all times when integrated with the spacecraft.
8	Attachment bolts	+Zs	+Ys	During AIT activities

DPU Unit

This table indicates the viewing direction from the instrument.

	Item	Instrument Side	Access Required
1	Elecuical Connectors	+u	During AIT activities
3	Attachment Bolts	See I/F DWG	During AIT activities

The detailed position of these items are indicated on the Mechanical Interface Control Drawing (§ 2.1.4.).

2.26. On-Ground Alignment

This section is only applicable for the SEM-2 TED and MEPED.

The DPU unit has no alignment requirement.

2.2.6.1. Alignment Method

Alignment of the SEM-2 TED and MEPED. with respect to the spacecraft reference axis, is by use of accurate registration of the attachment holes as given in the alignment table (See § 226.3.).

The mounting hole pattern provided for the SEM-2 TED and MEPED is accurate as stated in § 2.2.6.3. No adjustment for rotation is foreseen about any axis for initial ground co-registration. The instrument is accommodated accepting the X. Y and Z axis positions to an accuracy as specified in § 2.2.6.3. and 2.2.6.4.

The primary co-registration of SEM-2 TED and MEPED is with respect to the satellite reference frame.

2.2.6.2. Alignment Hardware

SEM-2 TED and MEPED units have no associated alignment hardware.

2.2.6.3. Alignment Tolerances for Instrument Interfaces

The following table gives the alignment tolerances of SEM-2 TED and MEPED with respect to the satellite reference frame.

METOP Axes (2 Sigma Values)	X (Deg.)	Y (Deg.)	Z (Deg.)	Responsible
Absolute alignment between the satellite alignment cube and the instr. alignment cube	N/A	N/A	N/A	N/A
Absolute alignment between the satellite alignment cube and the unit attachment hole pattern	± 1.0	± 1.0	± 1.0	METOP
Absolute alignment between the unit attachment hole pattern and the unit boresight direction	± 0.2	± 0.2	± 0.2	SEM-2 TED & MEPED

2.2.6.4. Co-Alignment

There is no requirement for co-alignment of the SEM-2 TED and MEPED units.

2.2.7. Deployment Mechanisms and Pyros

2.2.7.1. Deployment Mechanisms

Not applicable for SEM-2.

2.2.7.2. Pyros

Not applicable for SEM-2.

2.2.8. Interface Structural Design

Flight Limits Loads are enveloping the loads, including launch, manufacturing, handling, transportation and ground testing (excluding qualification testing).

Qualification Limit Loads add a qualification factor (1.25 for METOP) on top of the Flight Limit Loads.

2.2.8.1. SEM-2 Limit Loads

The SEM-2 is tested to the following limit loads applied at the instrument interface attachment points :

TED, MEPED & DPU	Load Axis (grms)		
	X	*Y*	Z
Maximum Flight Limit Load	5.9	5.9	5.9
Qualification Limit Loads	8.8	8.8	8.8

2.2.8.2. METOP Induced Limit Loads

Preliminary analysis indicate the following maximum predicted limit loads applied to the SEM-2 during the METOP mission :

Maximum Flight Limit Load	40 g	Applied at unit centre of gravity in any spatial direction
Qualification Limit Loads	50 g	

Figure 2.2.8.2/1 : METOP Induced Loads for SEM-2

These levels will be revisited following future structural analysis and the METOP structural model test campaign.

2.2.83. l-g Interface Loads

The SEM-2 l-g interface loads, calculated at each interface point (zero preload), with the instrument hard-mounted configuration are presented in the following tables :

SEM-2 Hard Mounted Interface Flight Limit Loads Based on 1 g Applied in X			
Attachment Id.	Shear Force (N)	Axial Force (N)	Moment (N.mm)
SEM-2 TED			
1	TBD_{SEM}	TBD_{SEM}	TBD_{SEM}
2	TBD_{SEM}	TBD_{SEM}	TBD_{SEM}
3	TBD_{SEM}	TBD_{SEM}	TBD_{SEM}
4	TBD_{SEM}	TBD_{SEM}	TBD_{SEM}
5	TBD_{SEM}	TBD_{SEM}	TBD_{SEM}
6	TBD_{SEM}	TBD_{SEM}	TBD_{SEM}
SEM-2 MEPED			
1	TBD_{SEM}	TBD_{SEM}	TBD_{SEM}
2	TBD_{SEM}	TBD_{SEM}	TBD_{SEM}
3	TBD_{SEM}	TBD_{SEM}	TBD_{SEM}
4	TBD_{SEM}	TBD_{SEM}	TBD_{SEM}
5	TBD_{SEM}	TBD_{SEM}	TBD_{SEM}
6	TBD_{SEM}	TBD_{SEM}	TBD_{SEM}

SEM-2 Hard Mounted Interface Flight Limit Loads Based on 1 g Applied in Y			
Attachment Id.	Shear Force (N)	Axial Force (N)	Moment (N.mm)
SEM-2 TED			
1	TBD_{SEM}	TBD_{SEM}	TBD_{SEM}
2	TBD_{SEM}	TBD_{SEM}	TBD_{SEM}
3	TBD_{SEM}	TBD_{SEM}	TBD_{SEM}
4	TBD_{SEM}	TBD_{SEM}	TBD_{SEM}
5	TBD_{SEM}	TBD_{SEM}	TBD_{SEM}
6	TBD_{SEM}	TBD_{SEM}	TBD_{SEM}
SEM-2 MEPED			
1	TBD_{SEM}	TBD_{SEM}	TBD_{SEM}
2	TBD_{SEM}	TBD_{SEM}	TBD_{SEM}
3	TBD_{SEM}	TBD_{SEM}	TBD_{SEM}
4	TBD_{SEM}	TBD_{SEM}	TBD_{SEM}
5	TBD_{SEM}	TBD_{SEM}	TBD_{SEM}
6	TBD_{SEM}	TBD_{SEM}	TBD_{SEM}

SEM-2 Hard Mounted Interface Flight Limit Loads Based on 1 g Applied in Z			
Attachment Id.	Shear Force (N)	Axial Force (N)	Moment (N.mm)
SEM-2 TED			
1	TBD_{SEM}	TBD_{SEM}	TBD_{SEM}
2	TBD_{SEM}	TBD_{SEM}	TBD_{SEM}
3	TBD_{SEM}	TBD_{SEM}	TBD_{SEM}
4	TBD_{SEM}	TBD_{SEM}	TBD_{SEM}
5	TBD_{SEM}	TBD_{SEM}	TBD_{SEM}
6	TBD_{SEM}	TBD_{SEM}	TBD_{SEM}
SEM-2 MEPED			
1	TBD_{SEM}	TBD_{SEM}	TBD_{SEM}
2	TBD_{SEM}	TBD_{SEM}	TBD_{SEM}
3	TBD_{SEM}	TBD_{SEM}	TBD_{SEM}
4	TBD_{SEM}	TBD_{SEM}	TBD_{SEM}
5	TBD_{SEM}	TBD_{SEM}	TBD_{SEM}
6	TBD_{SEM}	TBD_{SEM}	TBD_{SEM}

SEM-2 DPU Hard Mounted Interface Flight Limit Loads			
Attachment Id.	Shear Force (N)	Axial Force (N)	Moment (N.mm)
Based on 1 g Applied in U			
1	TBD_{SEM}	TBD_{SEM}	TBD_{SEM}
2	TBD_{SEM}	TBD_{SEM}	TBD_{SEM}
3	TBD_{SEM}	TBD_{SEM}	TBD_{SEM}
4	TBD_{SEM}	TBD_{SEM}	TBD_{SEM}
5	TBD_{SEM}	TBD_{SEM}	TBD_{SEM}
6	TBD_{SEM}	TBD_{SEM}	TBD_{SEM}
Based on 1 g Applied in V			
1	TBD_{SEM}	TBD_{SEM}	TBD_{SEM}
2	TBD_{SEM}	TBD_{SEM}	TBD_{SEM}
3	TBD_{SEM}	TBD_{SEM}	TBD_{SEM}
4	TBD_{SEM}	TBD_{SEM}	TBD_{SEM}
5	TBD_{SEM}	TBD_{SEM}	TBD_{SEM}
6	TBD_{SEM}	TBD_{SEM}	TBD_{SEM}
Based on 1 g Applied in W			
1	TBD_{SEM}	TBD_{SEM}	TBD_{SEM}
2	TBD_{SEM}	TBD_{SEM}	TBD_{SEM}
3	TBD_{SEM}	TBD_{SEM}	TBD_{SEM}
4	TBD_{SEM}	TBD_{SEM}	TBD_{SEM}
5	TBD_{SEM}	TBD_{SEM}	TBD_{SEM}
6	TBD_{SEM}	TBD_{SEM}	TBD_{SEM}

2.2.8.4. **Structural Frequency Characteristics**

2.2.8.4.1. Launch Configuration Stiffness characteristics

The following gives the dynamic frequency characteristics of the SEM-2 sensor unit in the launch configuration.

SEM-2 Units							
Frequency	**Mode**	**Effective Mass (kg)**			**Effective Inertia (kg.m²)**		
(Hz, ± 2%)		**Mx**	**My**	**Mz**	**Ix**	**Iy**	**Iz**
250	TED Fundamental	N/A	N/A	N/A	N/A	N/A	N/A
310	MEPED Fundamental	N/A	N/A	N/A	N/A	N/A	N/A
560	DPU Fundamental	N/A	N/A	N/A	N/A	N/A	N/A

SEM-2 Eigen Frequencies and Associated Effective Masses and Inertiae.

2.2.8.4.2. In-Orbit Configuration Stiffness Characteristics

N/A.

2.2.8.5. Structural Mathematical Models - Applicability for SEM-2

This section is not applicable to SEM-2.

2.3. THERMAL INTERFACE DESCRIPTION

23.1. Thermal Control Concept

Externally Mounted TED and MEPED Units

The Instrument Supplier is responsible for the thermal design and the thermal analysis of the instrument within the METOP defined thermal interface constraints.

The SEM-2 MEPED and TED (Cat. C units) use a combination of operational heaters, passive radiators and MLI blankets for thermal control.

They have operational heaters mounted internally to the units and controlled by the METOP TCU using a thermistor located within each unit.

Survival temperatures are achieved using externally mounted heaters and thermostats.

The following is supplied and specified by the Instrument Supplier:

- One (non redundant) internally mounted TED operational heater, connected to the TED connector JO4
- One (non redundant) internally mounted MEPED operational heater, connected to the MEPED connector JO5

Thermistors, supplied by METOP, are installed in TED and MEPED by the Instrument Supplier (one per unit, no redundancy).

The following is supplied and specified by METOP:

- One internally mounted TED operational thermistor, connected to the TED connector JO4
- One internally mounted MEPED operational thermistor, connected to the MEPED connector JO5
- Externally mounted TED survival heaters and thermostats.
- Externally mounted MEPED survival heaters and thermostats.

DPU

The SEM-2 DPU (Cat. B unit) incorporates a passive thermal control philosophy for heat rejection. The DPU has a conductive path through the interface baseplate into the satellite. The control of the external thermal environment for the DPU is under the responsibility of the METOP PLM. The DPU instrument unit temperature is controlled by passive design The METOP provided heaters and temperature sensors are mounted externally to the unit. METOP provides also thermostatically conuolled heaters to maintain non-operational temperatures. These are mounted externally to the DPU unit.

2.3.1.1 Thermal Control During Nominal Operations

The nominal operations correspond to all SEM-2 modes with the exception of Off Mode.

During these modes, the TED and MEPED unit temperature is controlled by passive design (blankets and radiating surfaces) with the minimum temperature limited by the METOP TCU software.

2.3.1.2. Thermal Control During Non Nominal / Contingency Operations

2.3.1.2.1. General

The non nominal / contingency mode corresponds to the SEM-2 Off Mode.

During this mode, the TED and MEPED minimum survival temperatures achieved using the thermostatically controlled heaters.

The following only applies to the TED and MEPED.

2.3.1.2.2. Transient Attitudes

The SEM-2 may be in Off Mode for any transient attitude sequence : in this mode, the instrument is not damaged by any Sun illumination condition

2.3.1.2.3. METOP Orbit Control Modes

The SEM-2 TED and MEPED are compatible with the METOP orbit control modes (See § 1.3.4.2.).

2.3.1.2.4. METOP Safe Mode

The SEM-2 TED and MEPED, in the Off mode, are compatible with the METOP safe mode as defined in § 1.3.4.2.

23.2. Instrument Thermal Requirements

2.3.2.1. Instrument Temperature Range

2.3.2.1.1. On-Orbit Temperature Range

The following are the on-orbit temperature limits (Deg. C ; for reference only, see § 2.3.2.2) :

SEM-2	On and Cal. Modes		Off Mode		Switch-On
	Min.	Max.	Min.	Max.	Min.
TED	-20	+30	-30	+40	-30
Ref. Point Location	Internal to TED (Note 1)		(Note 1)		Internal to TED (Note 1)
MEPED	-20	+25	-30	+30	-30
Ref. Point Location	Internal to MEPED (Note 2)		(Note 2)		Internal to MEPED (Note 2)
DPU	-20	+30	-30	+40	-3p
Ref. Point Location	(Note 3)		(Note 3)		(Note 3)

Notes :

1. Analog Temperature, TED Thermistor (Direct Analog), see AD12.
2. Analog Temperature, MEPED Electron Telescope Thermistor (Direct Analog). see AD13.
3. Analog Temperature, DPU Thermistor (Direct Analog), see AD14.

2.3.2.1.2. Ground Testing Temperature limits

The following temperatures (deg. C) will not be exceeded during all ground tests :

SEM-2	On and Cal. Modes		Off Mode		Switch-On
	Min.	Max.	Min.	Max.	Min.
TED	-30	+30	-30	+40	-30
Ref. Point Location	Internal to TED (Note 1)		(Note 1)		Internal to TED (Note 1)
MEPED	-30	+25	-30	+30	-30
Ref. Point Location	Internal to MEPED (Note 2)		(Note 2)		Internal to MEPED (Note 2)
DPU	-30	+40	-30	+50	-30
Ref. Point Location	(Note 3)		(Note 3)		(Note 3)

Notes :

1. Analog Temperature, TED Thermistor (Direct Analog), see AD12.
3. Analog Temperature, MEPED Electron Telescope Thermistor (Direct Analog), see AD13.
3. Analog Temperature, DPU Thermistor (Direct Analog), see AD14.

4. Data may be outside specification at temperatures below -25 deg. C.
5. The MEPED sensor is damaged at temperatures above +30 deg. C.

2.3.2.1.3. Ground Storage and Transportation Temperature Range .

During ground storage,' with the instrument installed on the satellite, and during transportation of the complete spacecraft the temperatures of the instrument will be maintained in the range :

TED	-30t044Qdeg.C
MEPED	-30 to +30 deg. c
DPU	-30 to +40 deg. c

2.3.2.2. Temperatures at the Interface

2.3.2.2.1. TED and MEPED .

The operating, non-operating and switch-on temperatures for the SEM-2 TED and MEPED units at the instrument / satellite interface are defined hereafter.

Deg. C	Operational (Measurement Mode)		Non Operational (Other Modes)		Switch-On
	Min.	Max.	Min.	Max.	Min.
TED	-20	+30	-30	+40	-30
Ref. Point Location	TBD_{MET}		TBD_{MET}		TBD_{MET}
MEPED	-20	+25	-30	+30	-30
Ref. Point Location	TBD_{MET}		TBD_{MET}		TBD_{MET}

The Temperature Reference Point(s) at which these temperatures apply is (are) defined in the Thermal Interface Drawing (TBD_{MET}).

2.3.2.2.2. DPU

The SEM-2 DPU unit is category B unit, fully integrated within the PLM. The operating, non-operating and switch-on temperatures for the DPU at the instrument / satellite interface are defined hereafter :

SEM-2 DPU Temperatures at the Interface (Deg. C)					
Ref. Point	Operation		Non-Operation		Switch-On
Location	Min.	Max.	Min.	Max.	Min.
DPU	-20	+40	-30	+40	-30

The Temperature Reference Points on the instrument baseplate at which these temperatures apply are defined in the Thermal Interface Drawing (TBD_{MET}).

2.3.2.2.3. Stability Requirements

There is no temperature stability requirement for any of the SEM-2 units.

23.23. Radiative Requirements

The SEM-2 TED unit has a radiator in the -Xs direction (METOP satellite-axis). The SEM-2 MEPED unit has a radiator in the +Zs direction (METOP satellite axis). The majority of the remaining surfaces. are insulated from the external environment and the spacecraft by use of MLI blankets. The view factors for the radiators are given in § 2.3.4.2.

2.33. Thermal Control Budgets

233.1. Heater Power Budgets

This section is not applicable for the internal DPU unit_

Heater power is required by the SEM-2 TED and MEPED both when operating and non operating (Off Mode). The corresponding heater power budget is dealt within § 3.4.2.

233.2. Instrument Thermal Dissipation

The dissipation of the SEM-2 units, excluding heater power. is constant throughout the orbit and is (see § 3.4.2) :

	SEM-2 Thermal Dissipation (Watts)			
	Satellite Nominal Operating Modes			Safe Mode
	Minimum Dissipation		Maximum Dissipation	min / Max.
	Operating Modes BOL	Off Mode	Operating Modes EOL	Off Mode EOL
TED	1.15	0.0	1.75	0.0
MEPED	2.76	0.0	3.50	0.0
DPU	1.80	0.0	3 . 6 0	0.0
Total	5.71	0.0	8 . 8 5	0.0

23.3.3. Heat Exchange Budgets

The SEM-2 DPU unit is conductively coupled to the METOP PLM.

2.3.3.3.1. Conductive Heat Transfer

The averaged calculated conductive heat transfer between the Payload Module structure and the SEM-2 TED and MEPED Sensor Unit baseplate shall be in the range as shown :

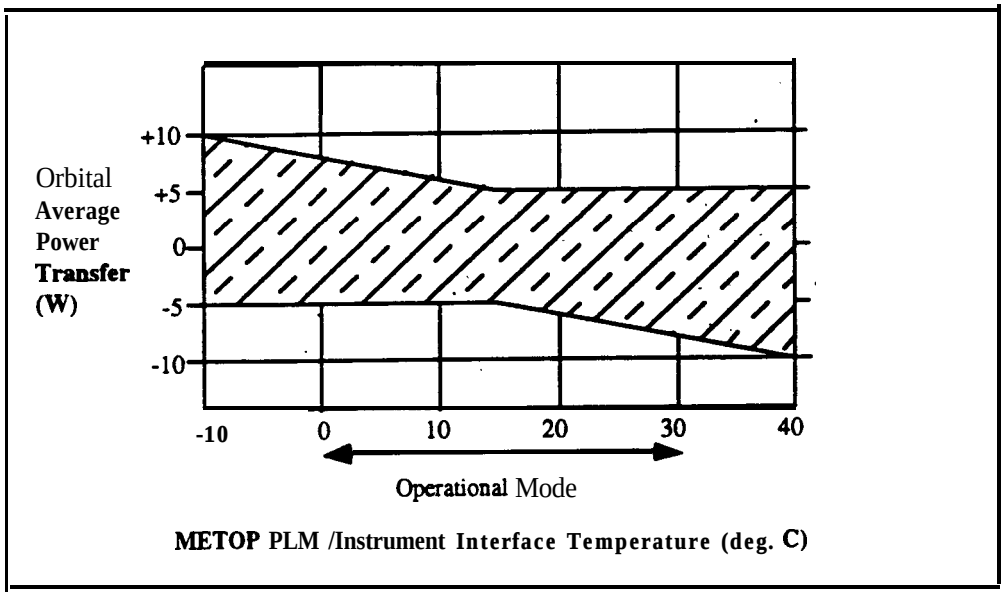

+: watts into PLM *- : watts out of PLM*

Figure 2.3.3.3/1 : Orbital Average Power Transfer

2.3.3.3.2. Joint Characteristics

The SEM-2 TED and MEPED units are thermally isolated from the spacecraft structure using thermal stand-offs (TBC_{MET}).

The SEM-2 DPU is conductively coupled to the PLM panel using thermal filler.

2.3.3.3.3. Radiative Heat Transfer

This section is not applicable to the SEM-2 DPU (the DPU internally radiates to the PLM).

The averaged calculated radiative heat transfer between the Payload Module structure and the SEM-2 TED and MEPED for different cases, as determined from the coupled analysis, are :

Radiative Heat Transfer (Orbit Average, Watts)				
SEM-2 Radiators	Satellite Nominal Operating Modes			Safe Mode
	Minimum		Maximum	Min/Max
	Meas. Mode Unique Mode	other	Measurement and Unique Modes	
TED	TBD_{MET}	TBD_{MET}	TBD_{MET}	TBD_{MET}
MEPED	TBD_{MET}	TBD_{MET}	TBD_{MET}	TBD_{MET}

23.4. Thermal Interfaces

The SEM-2 DPU conductive and radiative characteristics are described by a single node model as shown.

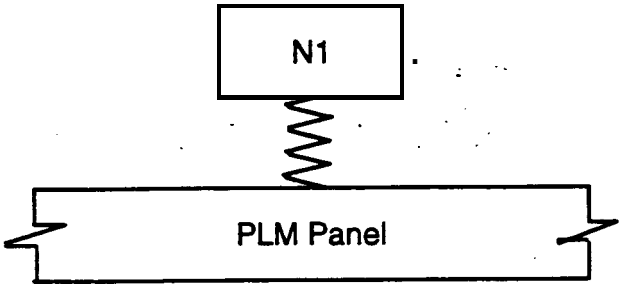

Figure 2.3.4/1 : SEM-2 DPU Simplified Interface Model

2.3.4.1. **Conductive Interfaces**

The total thermal conductance between the SEM-2 TED and MEPED units and the Payload Module is TBD_{MET} WK.

The thermal conductance between the SEM-2 DPU instrument and the Payload Module is :

SEM-2	Node	Thermal Conductance (W/K)
DPU	Nl-PLM	> 36

The DPU unit is conductively coupled to the external surfaces of the PLM. The contact area is as defined in the Thermal Interface Drawing.

SEM-2	Contact Area (m^2)
DPU	0.067

The following only applies to the SEM-2 TED and MEPED.

3.3.4.1.1. Description (TED and MEPED Only)

The conductive interfaces are the mounting feet which are defined in the Mechanical Interface Control Drawing § 2.1.4.).

1) The mounting pad area is : 96 mm^2 / pad

2) Number of pads for each : 6

2.3.4.1.2. Bolts (TED and MEPED Only)

The bolts are defined in § 2.2.4.

2.3.4.1.3. Thermal &and-Offs (TED and MEPED Only)

Thermal stand-offs are used between the SEM-2 TED and MEPED mounting feet and the spacecraft PLM structure. 'The definition of these stand-offs is contained in the Thermal Interface Coutrol drawing (TBD_{MET}).

2.3.4.2. **Radiative Interfaces**

2.3.4.2.1. Radiator characteristics

The SEM-2 TED and MEPED radiator areas are :

Radiator Viewing Direction (METOP axes)	Radiator Area		Thermal FOV
	Available (m^2)	Used (m^2)	Achieved
T E D	0.013	0.0034 TBC_{SEM}	TBD_{MET}
MEPED	0 . 0 3 8	0.019 TBC_{SEM}	. N/A

SEM-2 TED and MEPED Radiator Areas and Thermal Fields of View

The SEM-2 DPU radiator areas are :

Unit	Radiator Area	
	Node	Area (m^2)
DPU	N1 (all directions except -W)	0.149

SEM-2 *DPU Radiator Areas*

For the internally mounted DPU. the thermal radiative environment temperature in the hot case is TBD_{MET} deg. C.

2.3.4.2.2. Thermo-Optical Properties

The external surfaces of the SEM-2 TED and MEPED units, and the finishes used are given in the Thermal Interface Drawing (§ 2.1.4.).

The internally mounted DPU surfaces are black painted except for the mounting surface

The mechanical characteristics (planarity, materials...) is described in the Mechanical Interface Description Sections (§ 2.2.4.).

The thermo-optical properties of the finishes are given in the following tables :

SEM-2 TED Material Thermo-Optical Properties						
#	Acronym	Surface / Material	Solar Absorptance			IR
			BOL	EOL 5yr.	EOL 6yr.	Emit-tance
1	GSFCWPTTT	Radiator/ GSFC Conductive White Paint NS-43-C	0.2	0.45.	0.45	0.87
2	SEMAPRTTT	SEM Aperture	0.90	0.90	0.90	0.90
3.4'	GOLDALTIT	Structure / Gold Coated Aluminium	0.24	0.30	0.30	0.03
5-18	KAPTON2M0	MLI / IT0 Aluminized Kapton 2mil	0.39	0.50	0.54	0.62

SEM-2 MEPED Material Thermo-Optical Properties						
#	Acronym	Surface/Material	Solar Absorptance			IR
			BOL	EOL 5yr.	E O L 6yr.	Emit-tance
1.4	AGTEFL2MO	Omnidirectional Sensor Thermal Shield / 2 mil Second Surface Silver Teflon Tape	0.07	0.24	0.25	0.65
2. 5	SEMAPRTTT	SEM Aperture	0.90	0.90	0.90	0.90
3. 7-15	KAPTON1M0	MLI / IT0 Aluminized Kapton 1 mil	0.39	0.50	0.54	0.62
6	GOLDALTIT	Structure / Gold Coated Aluminium	0.24	0.30	0.30	0.03

SEM-2 DPU Material Thermo-Optical Properties						
#	Acronym	Surface / Material	Solar Absorptance			IR
			BOL	EOL 5yr.	EOL 6yr.	Emit-tance
I-5	CHM306TTT	Black Paint Chemglaze 2306	0.95 *	0.95 *	0.95 *	0.90
6	TBDMET	Al Chromate Conversion	0.48 TBC_{MET}	0.48 TBC_{MET}	0.48 TBC_{MET}	0.6 TBC_{MET}

* : these values are not normally applicable but are required for the modelization (ESARAD).

23.43. Thermal Heat Capacity

The thermal heat capacity of SEM-2 TED is 3000 J/K and MEPED is 4272 J/K.

The thermal heat capacity of SEM-2 DPU unit is :

Unit	Node	Thermal Heat Capacity (J/K)
DPU	N1	3000

2.3.4.4. **Instrument Temperature Measurement**

This section is not applicable for the DPU.

2.3.4.4.1. Temperahue Measurement During Operational Phases

Thermistor type **for** TED : **TBD_{MET}**.

Thermistor type for MEPED : TBD_{MET}

The operational heaters within TED and MEPED shall be **powered** according to the following control law and temperature sets : **TBD_{SEM}**.

2.3.4.4.2. Temperature Measurement During Non Operating Phases

Thermal control is provided by the **spacecraft for** the TED and MEPED during SEM-2 Off Mode **by** means of thermostats that are externally mounted to the SEM-2 TED and MEPED units.

Location and Set Points for Externally Mounted Survival Heater Thermostats			
Unit	**Location**	**Closed At**	**Open At**
TED	**TBD_{MET}**	**-TBD_{MET} ± TBD_{MET}** deg. C	**-TBD_{MET} ± TBD_{MET}** deg. C
MEPED	**TBD_{MET}**	**-TBD_{MET} ± TBD_{MET}** deg. C	**-TBD_{MET} ± TBD_{MET} deg. C**

2.3.4.5. Heater Definition

This section is not applicable for the DPU.

2.3.4.5.1. Operational Heaters

The following operational heaters are internally mounted in the' SEM-2 TED and MEPED units :

Operational Heater Location and Characteristics				
Unit	**Location**	**Number**	**Total Resistance (Ω at 25 deg. C) ± 5%**	**Resistance Variation ppm / deg. C [2]**
TED	**See AD12**	**3 (1 connector)**	261	± 30
MEPED	see AD13	3 (1 **connector)**	130	**± 30**

I

[2] ppm = parts per million.

2.3.4.5.2. Survival Heaters

The following thermostat-controlled heaters are externally mounted in the SEM-2 TED and MEPED units :

External Heater Location and Characteristics				
Unit	**Location**	Number	**Total Resistance (Ω at 25 deg. C) ± 5%**	**Resistance Variation ΔR/R**
TED	TBD_{MET}	TBD_{MET}	TBD_{MET}	TBD_{MET} / deg. C
MEPED	TBD_{MET}	TBD_{MET}	TBD_{MET}	TBD_{MET} / deg. C

23.4.6. Thermal Interface Models

A reduced model is required for SEM-2 TED 'and MEPED for the system thermal analysis, as specified in AD3.

See AD6 and AD7.

2.4. INSTRUMENT AND DISTURBANCE INTERFACES

This section is not applicable to SEM-2.

3. COMMAND AND CONTROL, MEASUREMENT DATA, ELECTRICAL, EMC AND RFC INTERFACE DESCRIPTION

BLANK

3.1. ELECTRICAL INTERFACE OVERVIEW

The avionics interface between the METOP Payload Module (PLM) and the SEM-2 instrument is handled via the Power Conditioning Unit (PCU), the Thermal Control Unit (TCU) and the NOAA Interface unit (NIU).

For adaptation of the single ended interfaces of SEM-2, a special grounding concept is described in § 3.8 (EMC).

The command and housekeeping budget for the instrument is as follows :

- 7 pulse discrete commands
- 6 level discrete commands
- 9 Digital B parameters, each 1 bit
- 13 Analog parameters, each to be converted to 8 bits within NIU.

The following Fig. 3. l-l gives an overview on the electrical interfaces between the PLM and the SEM-2 as well the SEM-2 internal interfaces between the SEM-2 Data Processing Unit (DPU), the SEM-2 Medium Energy Proton and Electron Detector (MEPED) and the SEM-2 Total Energy Detector (TED).

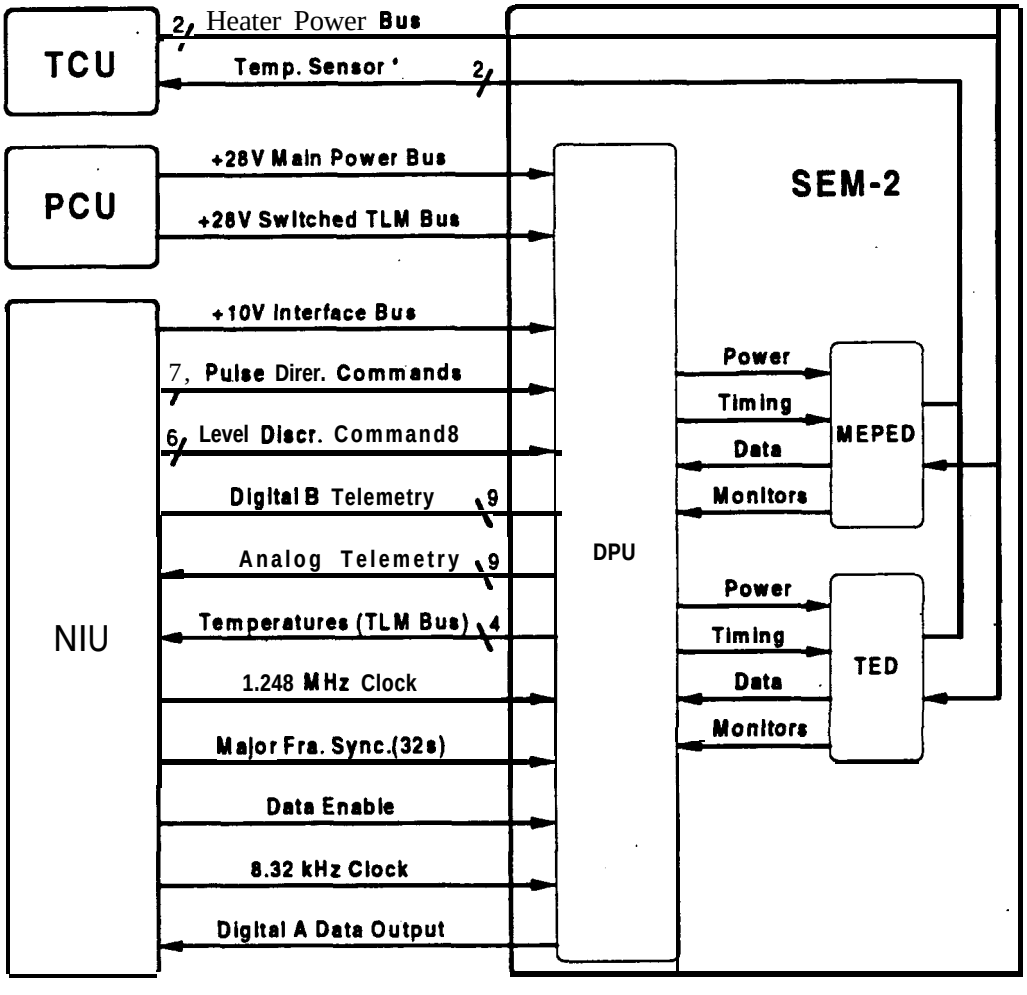

Fig. 3.1-l : SEM-2 Electrical Interface Overview

3.2. COMMAND AND CONTROL FUNCTIONAL DESCRIPTION

This section describes the command and control concept for the SEM-2 instrument.

'Command and Control' comprises the activities respective data flows for commanding of the insuumknt as well as for the acquisition of instrument housekeeping data.

Commanding of the instrument and acquisition of instrument housekeeping telemetry is performed under the control of the NOAA Interface Unit (NIU). Commands are distributed from the PMC via the PLM OBDH Bus to the NW which translates or converts the functional and electrical interfaces to NOM instruments and controls command execution. Vi& versa housekeeping data are aquired by the NIU from the instrument and transmitted to ground

Three data sets are made available by the instrument :
- Digital A data
- Digital B data
- Analog data

Digital A data are in the above sense 'measurement data' and are handled by NIU. They are not routed via the PLM OBDH Bus to the PMC and not used for housekeeping by the satellite.

Digital B and analog data are housekeeping data and only the Digital B data are controlled by the NIU. Both are reported to the ground via S-band telemetry.

3.2.1. Protocol

Not applicable for SEM-2.

3.2.2. Telecommands

Telecommands to the instrument shall be provided by the NIU.

The minimum time between two consecutive commands will be 100 ms, except for pulse commands which shall be followed by a delay of 0.5 s. minimum.

The instrument shall be commanded by Pulse Discrete Commands* and by Level Discrete Commands*.

Pulse Discrete Commands shall be issued to the instrument one command at a time and Level Discrete Commands shall be combined using 6 channels in parallel per command.

---

1 *Pulse Discrete Command Definition*
The pulse discrete command is normally used to change the state of a latching relay in the instrument. An ON or TRUE condition is issued in the form of a pulse to the instrument over a single line.

2 Level *Discrete Command Definition*
The level discrete command presents a ON or TRUE (resp. OFF or FALSE) condition to the instrument full time. until the same command is given to change the state to OFF or FALSE (resp. OFF or FALSE).

Any pulse ON condition may last for considerable time in case of a spacecraft anomaly. The instrument shall not be damaged by such an occurrence.

The METOP satellite will provide capabilities for pre-programming of the SEM-2 of up to 36 hours. The instrument shall cope with this pre-programming period, and not require any intermediate command and control process.

The commands to operate the instxument shall be as listed in Table 3.2.2-1.

Note : The operational modes and sequences of commanding are defined in § 1.4 and 1.5.

3.2.2.1. Telecommand Definition

The satellite shall provide to the instrument all commands which are listed in Table 3.2.2-1a.

No	Telecommand	Mnemo	Type	Remarks
1	Level Latch Command		Pulse	
2	µP A Select		Pulse	
3	µP B Select		Pulse	
4	MEPED Bias ON		Pulse	
5	DPU / µP B ON		Pulse	
6	DPU / µP A ON		Pulse	
7	SEM Off		Pulse	
8	Level Command 1 (LC1)		Level	See Table 3.2.2-1b
9	Level Command 2 (LC2)		Level	See Table 3.2.2-1b
10	Level Command 3 (LC3)		Level	See Table 3.2.2-1b
11	Level Command 4 (LC4)		Level	See Table 3.2.2-1b
12	Level Command 5 (LC5)		Level	See Table 3.2.2-1b
13	Level Command 6 (LC6)		Level	See Table 3.2.2-1b

Table *3.2.2-1a. SEM Telecommand Defiition*

The reset state of all level commands shall be "FALSE". For electrical characteristics, see § 3.5.2.1. (code CCL).

SEM-2 Level Commands (Level Command 1 to Level Command 6) are combined to define 42 coded commands which are decoded in the SEM-2 microprocessor. These coded commands are summarized in Table 3.2.2-1b. Undefined level commands are ignored by the SEM-2.

Telecommand		Command Line Configuration						Function Enabled	Notes
		LC6	LC5	LC4	LC3	LC2	LC1		
C1	TED LV Off	0	0	0	0	0	1	TED LVPS (low voltages) off	1, 2
C2	Sweep Off	0	0	0	0	1	0	TED sweep supply off	1, 2
C3	e CDEM HV Off	0	0	0	0	1	1	TED electron CDEM HVPS (high voltages) off	1, 2
C4	p CDEM HV Off	0	0	0	1	0	0	TED proton CDEM HVPS (high voltages) off	1, 2
C5	MEPED LV Off	0	0	0	1	0	1	MEPED low voltages off	2, 3
C6	TED LV On	0	0	1	0	0	1	TED LV (low voltages) on, with the electron & proton discriminators at their lowest levels	-
C7	Sweep On	0	0	1	0	1	0	TED sweep supply on	1
C8	e CDEM HV On	0	0	1	0	1	1	TED electron CDEM HVPS (high voltages) on, at their minimum voltages	1
C9	p CDEM HV On	0	0	1	1	0	0	TED proton CDEM HVPS (high voltages) on, at their minimum output voltages	1
C10	MEPED LV On	0	0	1	1	0	1	MEPED low voltages on	-
C11	e CDEM HV 0	0	1	0	0	0	0	TED electron CDEM HVPS Level 000	1, 2
C12	e CDEM HV 1	0	1	0	0	0	1	TED electron CDEM HVPS Level 001	1
C13	e CDEM HV 2	0	1	0	0	1	0	TED electron CDEM HVPS Level 010	1
C14	e CDEM HV 3	0	1	0	0	1	1	TED electron CDEM HVPS Level 011	1
C15	e CDEM HV 4	0	1	0	1	0	0	TED electron CDEM HVPS Level 100	1
C16	e CDEM HV 5	0	1	0	1	0	1	TED electron CDEM HVPS Level 101	1
C17	e CDEM HV 6	0	1	0	1	1	0	TED electron CDEM HVPS Level 110	1
C18	e CDEM HV 7	0	1	0	1	1	1	TED electron CDEM HVPS Level 111	1

lotes : next page.

*Table 3.2.2-1b : Coded **SEM-2 Level** Commands (2/2)*

Telecommand		Command Line Conf.						Function Enabled	Note
		LC6	LC5	LC4	LC3	LC2	LC1		
C19	p CDEM HV 0	0	1	1	0	0	0	TED proton CDEM HVPS Level 000	1, 2
C20	p CDEM HV 1	0	1	1	0	0	1	TED proton CDEM HVPS Level 001	1
C21	p CDEM HV 2	0	1	1	0	1	0	TED proton CDEM HVPS Level 010	1
C22	p CDEM HV 3	0	1	1	0	1	1	TED proton CDEM HVPS Level 011	1
C23	p CDEM HV 4	0	1	1	1	0	0	TED proton CDEM HVPS Level 100	1
C24	p CDEM HV 5	0	1	1	1	0	1	TED proton CDEM HVPS Level 101	1
C25	p CDEM HV 6	0	1	1	1	1	0	TED proton CDEM HVPS Level 110	1
C26	p CDEM HV 7	0	1	1	1	1	1	TED proton CDEM HVPS Level 111	1
C27	e PHD LV 0	1	0	0	0	0	0	TED electron Discriminator Level 00	1, 2
C28	e PHD LV 1	1	0	0	0	0	1	TED electron Discriminator Level 01	1
C29	e PHD LV 2	1	0	0	0	1	0	TED electron Discriminator Level 10	1
C30	e PHD LV 3	1	0	0	0	1	1	TED electron Discriminator Level 11	1
C31	p PHD LV 0	1	0	1	0	0	0	TED proton Discriminator Level 00	1, 2
C32	p PHD LV 1	1	0	1	0	0	1	TED proton Discriminator Level 01	1
C33	p PHD LV 2	1	0	1	0	1	0	TED proton Discriminator Level 10	1
C34	p PHD LV 3	1	0	1	0	1	1	TED proton Discriminator Level 11	1
C35	TED IFC On	1	1	0	0	0	0	TED IFC Start	4
C36	TED IFC Off	1	1	0	0	0	1	TED IFC Terminate	-
C37	MEP IFC On	1	1	0	0	1	0	MEPED IFC Start	4
C38	MEP IFC Off	1	1	0	0	1	1	MEPED IFC Terminate	-
C39	µP B WD Reset	1	1	1	0	0	1	µP B Watchdog Count and Status Reset	5
C40	µP A WD Reset	1	1	1	0	1	0	µP A Watchdog Count and Status Reset	5
C41	µP WD Test	1	1	1	0	1	1	Active µP Watchdog Test	
C42	NOP	0	0	0	0	0	0	No operation	

Note 1) Indicated TED commands received during, the TED IFC are stored and executed upon completion or termination of IFC.

Note 2) Default condition assumed when DPU is powered up.

Note 3) MEPED LVPS off command received during MEPED IFC is stored and executed upon completion or termination of IFC.

Note 4) TED and MEPED IFC may be run separately or concurrently.

Note 5) µP watchdog count reset is decoded and executed in software ; µP watchdog status reset is decoded and executed in hardware.

Table 3.2.2-1b : Coded SEM-2 Level Commands (2/2)

3.2.2.2. Telecommand Functional Description

Details on the functions of each SEM-2 command are given in this section.

1. Level Latch Command

Pulse Discrete Command
Strobes level command lines LC1 through LC6 into DPU latch.

2. µP A Select

Pulse Discrete Command
Selects DPU microprocessor A. See pulse command 6.

3. µP B Select

Pulse Discrete Command
Selects DPU microprocessor B. See pulse command 5.

4. MEPED Bias ON

Pulse Discrete Command
Provides +28 V power to MEPED Solid State Detector (SSD) bias supply.
Bias supply may be powered with DPU power ON or OFF.

5. DPU / µP B ON

Pulse Discrete Command.
Provides +28 V power to DPU DC/DC converter, DPU +5 V power to microprocessor system B, arid +28 V power to TED e CDEM, p CDEM and Sweep supply power control relays.
DPU microprocessors A and B may be powered concurrently.

6. DPU / µP A ON

Pulse Discrete Command.
Provides +28 V power to DPU DC/DC converter, DPU +5 V power to microprocessor system A, and +28 V power to TED e CDEM, p CDEM and Sweep supply power control relays.
DPU microprocessors A and B may be powered concurrently.

7. SEM Off

Pulse Discrete Command.
Removes all SEM-2 power (turns the DPU low voltage DC/DC converter and the MEPED SSD bias supply off).

8. SEM Level **Command 1**

Bit 1 (LSB) of six bit encoded command Strobed by *Level Lurch Command* (Pulse Command #1).

9. SEM **Level** Command 2

Bit 2 of encoded command

10. SEM **Level Command 3**

Bit 3 of encoded command.

11. SEM Level Command 4

Bit 4 of encoded command.

12. **SEM Level Command 5**

Bit 5 of encoded command.

13. SEM **Level Command 6**

Bit 6 (MSB) of encodedcommand.

The 42 commands decoded from the combined SEM-2 Level Commands (Level Command 1 to Level Command 6) are listed in Table 3.2.2- 1 b above. They are reasonably self explanatory, except for the µP A and µP B Watchdog Count and Status Resets (µP A WD RESET and µP B WD RESET) which will be described in the following.

The microprocessor watchdog counters, which provide a degree of microprocessor performance verification, are maintained in Read Write Memory (RWM). The active microprocessor watchdog count is included in the Digital A data. Normally watchdog counts are 0. Certain microprocessor malfunctions cause the associated watchdog to reset the microprocessor, which subsequently increments the associated watchdog count. Watchdog counts are accumulated to a maximum of 255, at which time the counter is no longer incremented thus maximizing the probability that at least one non-zero watchdog count is read by telemetry if a watchdog detectable malfunction occurs in the active microprocessor

system. The active microprocessor watchdog count may be reset to 0 by issuance of the appropriate µP Watchdog Count and Status Reset command. Both watchdog counts are reset to 0 when the DPU is powered up. Since the watchdog counts are maintained by microprocessors, they might not be incremented properly, or the active microprocessor system watchdog count might not be read out properly, for some failure conditions, To assure that a positive indication of watchdog detectable failures is provided, any watchdog-generated microprocessor reset signal also sets an associated Digital B Telemetry Output status bit (µP System A/B Watchdog Status). regardless of whether or not that microprocessor system is the active system Thus, these two status bits are normally 0 and each toggles to 1 if an associated watchdog-generated microprocessor reset occurs. These bits can be reset to 0 only by the appropriate Watchdog Count and Status Reset command, or by turning the SEM power OFF and back ON. This assures that a positive indication of watchdog detectable failures is provided It should be noted that watchdog counts are reset in software, while the watchdog status bits are reset in hardware. Thus, the Watchdog Count and Status Reset level commands are decoded in hardware as well as in software.

Proper operation of the active microprocessor watchdog can be verified by the Watchdog Test command (µP WD Test) which forces a watchdog reset of the active microprocessor. The appropriate Watchdog Count and Status Reset command must be used to reset the watchdog count and status indicator following a watchdog test.

The WD RESET command also clears all error flags.

32.3. Housekeeping Telemetry

This section describes the SEM-2 Digital B and Analog Telemetry.

3.2.3.1. General Requirements

The NIU shall aquire the instrument-provided digital-B and analog HK data at any time when the instrument is in the ON or Calibration modes, and METOP shall acquire HK data in these modes.

The NIU will read out the following housekeeping telemetry formats from the instrument :

- Analog HK
- Digital HK ("Digital B").

The NIU will sample both analog and digital B housekeeping telemetry at the following rates :

- nominally at one sample every 16 seconds
- up to 8 samples per second for any selected parameter on request.

Analog data shall be acquired and converted within the NIU to 8 bit digital information with a 5.12 V full scale resolution (LSB = 20 mV).

No instrument housekeeping data shall be monitored by the METOP satellite. Nevertheless the Digital B data will be checked on-board for verification of command execution.

Note : for those commands that do not result in a change of a Digital B point, the verification of the command receipt by the instrument will be done by the Ground System with the instrument provided Analog Telemetry points.

3.2.3.2. **Digital** B Telemetry

The instrument shall provide the Digital B telemetry as listed in Table 3.2.3-l.

Each of the Digital B telemetry points shall indicate the status of the relevant commands according to § 3.2.2.

The SEM-2 digital B telemetry points are available as soon the DPU is turned on, i.e. after ***DPU µP A*** or ***B On*** command has been sent to the instrument

The digital B telemetry points shall be defined as following :

1.) Active Microprocessor System

Verifies the execution of the µP configuration command

2.) ***TED Electron Discriminator Control MSB***

Verifies the execution of the TED electronic discriminator control commands (see 3. below).

3.) ***TED Electron Discriminator Control LSB***

Verifies the execution of the TED electronic discriminator control commands, according to :

MSB	L S B	PHD Level
0	***0***	***0***
0	1	1
1	0	2
1	1	3

4.) TED Proton Discriminator Control MSB

Verifies the execution of the TED proton discriminator control commands (see 5. below).

5.) TED Proton Discriminator Control LSB

Verifies the execution of the TED proton discriminator control commands, according to :

MSB	LSB	PHD Level
0	0	0
0	1	1
1	0	2
1	1	3

6.) ***TED IFC Status***

Verifies the execution of the TED IFC On / Off commands

7.) MEPED IFC Status

Verifies the execution of the MEPED IFC On / Off commands

8.) µP System A Watch Dog Status

Monitors the µP system A watch dog operation.

9.) *µP B Watch Dog Status*

Monitors the µP system B watch dog operation

Nr.	Telemetry Point Name	State		Remark
		Logic "1" (Low Voltage)	Logic "0" (High Voltage)	
1	µP System ID	µP B	µP A	Also included in the Digital A
2	TED e PHD MSB	1	0	Also included in the Digital A
3	TED e PHD LSB	1	0	Also included in the Digital A
4	TED p PHD MSB	1	0	Also included in the Digital A
5	TED p PHD LSB	1	0	Also included in the Digital A
6	TED IFC	On	Off	Also included in the Digital A
7	MEPED IFC	On	Off	Also included in the Digital A
8	µP A Watch Dog	FAULT	NORMAL	
9	µP B Watch Dog	FAULT	NORMAL	

***Table** 3.2.3-1 : SEM-2 Digital B Telemetry*

3.2.3.3. **Analog Telemetry**

The SEM-2 provides analog telemetry channels listed in Table 3.2.3-2 to. monitor the health of the instrument. Analog telemetry is valid by 1 second after switching-on of instrument telemetry, i.e. after the full instrument turn-on sequence has been sent (See § 1.5).

Four (4) Analog Temperature Telemetry points shall be available 'whenever the 28 V Switched Telemetry Bus is powered. They are valid within 0.05 second after. the 28 V Switched Telemetry Bus has been commanded ON (independent of SEM-2 mode). Those points are defined in Table 3.2.3-2.

Typical valid data ranges and values are shown in Table 3.2.3-2

The telemetry points shall be defined as following :

1.) µP System A +5 Volt Moniwr

Verifies the execution of DPU / µP configuration commands.

2.) *µP System B +5 Volt Monitor*

Verifies the execution of DPU / µP configuration commands.

3.) *DPU +5 Volt Monitor*

Verifies the execution of DPU ON / OFF commands.

4.) *MEP +5 Volt Monitor*

Verifies the execution of MEPED ON / OFF commands.

5.) *TED +5 Volt Monitor*

Verifies the execution of TED ON / OFF commands.

6.) TED Sweep Voltage Monitor

Verifies the execution of TED Sweep Voltage Supply ON / OFF commands.

7.) TED Electron CDEM High Voltage Monitor

Verifies the execution of TED Electron CDEM HV ON/OFF and CONTROL commands.

8.) TED Proton CDEM High Voltage Monitor

Verifies the execution of TED Proton CDEM HV ON/OFF and CONTROL commands.

9.) *MEPED Omni Bias Voltage Monitor*

Verifies the execution of MEPED SSD Bias Supply ON/OFF commands.

10.) MEP Circuit Temperature Monitor

Monitors the MEPED circuit temperature.

11.) MEP Proton Telescope Temperature Monitor

Monitors the MEPED p telescope temperature.

12.) TED Temperature Monitor

Monitors the TED temperature.

13.) *DPU Temperature Monitor*

Monitors the DPU temperature.

The analog telemetry shall have the performance as defined in Table *3.2.3-2. The* transfer function between physical range and voltage range is part of the deliverables / as-built data.

#	Telemetry Point Name	Physical Range	Remarks
1	µP SYS A +5 Volt Monitor	µP SYS A ON : 4.8 to 5.2 V µP SYS A OFF : 0.0 to 0.2 V	AlsoinDig.A
2	µP SYS B +5 Volt Monitor	µP SYS B ON : 4.8 to 5.2 V µP SYS B OFF : 0.0 to 0.2 V	Also in Dig. A
3	DPU +5 Volt Monitor	µP SYS A or B ON : 4.8 to 5.2 V µP SYS A and B OFF : 0.0 to 0.2 V	Also in Dig. A
4	MEP +5 Volt Monitor	MEPED ON : 4.8 to 5.2 V MEPED OFF : 0.0 to 0.2 V	AlsoinDig.A
5	TED +5 Volt Monitor	TED ON : 4.7 to 5.1 V TED OFF : 0.0 to 0.2 V	Also in Dig. A
6	TED Sweep Voltage Monitor	TED Sweep V ON and IFC Pulser OFF : TBD* TED Sweep V ON and IFC Pulser ON : 0.0 to 0.3 V TED Sweep V OFF : 0.0 to 0.3 V	AlsoinDig.A
7	TED Electron CDEM HV Mon	TED Electron CDEM HV ON : 2300 to 3500 V TED Electron CDEM OFF : 0.0 to 100 V	Also in Dig. A
8	TED Proton CDEM HV Monitor	TED Proton CDEM HV ON : 15OOV to 2200V TED Proton CDEM HVOFF : 0.0 to 100 V	Also-in Dig. A
9	MEP Omni Bias V Monitor	MEPED Bias Voltage ON : 600 to 700 V MEPED Bias Voltage OFF : 0 to 10 V	Also in Dig. A
10	MEP Circuit Temp Monitor	-20 to 35 deg. c	Powered by +28V Analog TLM Bus
11	MEP p Telescope Temp Monitor	-20 to 28 deg. c	Powered by +28V Analog TLM Bus
12	TED Temperature Monitor	-20 to 35 deg. c	Powered by +28V Analog TLM Bus
13	DPU Temperature Monitor	-20 to 40 deg. c	Powered by +28V Analog TLM Bus

* The TED Sweep Voltage analog monitor nominal value depends on when it is sampled by the spacecraft. The range is TBD_{SEM}.

Table 3.2.3-2 : Analog Telemetry

Following are the Analog Telemetry status as function of the different telecommands (verification of the telecomrnands on the ground) :

#	Telecommand	Analog Telemetry Status	Timing (Sec)
PULSE COMMANDS			
1	Level Latch Command	See Level Commands below,	
2	µP A Select	None	-
3	µP B Select	None	-
4	MEPED Bias ON	*MEPED Omni Bias Voltage Mon.* = Nominal	0.1
5	DPU / µP B ON	*µP SYS B +5 Volt Monitor = Nominal* (4.93 to 5.09 V)	0.1
6	DPU/µP A ON	*µP SYS A +5 Volt Monitor = Nominal* (4.94 to 5.10 V)	0.1
7	SEM Off	*DPU +5 V Monitor = 0 V* *MEP +5 V Monitor = 0 V* *TED +5 V Monitor = 0 V* *TED Sweep Voltage Monitor = 0 V* *TED Electron CDEM HV Mon = 0 V* *TED Proton CDEM HV Mon = 0 V* *MEPED Omni Bias V Monitor = 0 V*	0.1
(LEVEL COMMANDS (COMBINED)			
C 1	TED LV Off	*TED +5 V Monitor = 0 V*	0.5
c 2	Sweep Off	*TED Sweep Voltage Monitor = 0 V*	0.5
C3	e CDEM HV Off	*TED Electron CDEM HV Mon = 0 V*	0.5
C4	p CDEM HV Off	*TED Proton CDEM HV Mon = 0 V*	0.5
C5	MEPED Lv off	*MEP +5 V Monitor = 0 V*	0.5
C6	(TED LV On	*TED +5 V Monitor = Nominal* (4.83 to 5.03 V)	0.5
c 7	Sweep On	*TED Sweep Voltage Monitor = Nominal* (see Table 3.2.3-2)	0.5
C 8	e CDEM HV On	*TED Electron CDEM HV Mon* = Nominal (see Table 3.2.3-2)	0.5
C9	p CDEM HV On	*TED Proton CDEM HV Mon = Nominal* (see Table 3.2.3-2)	0.5
Cl0	MEPED LV On	*MEP +5 V Monitor = Nominal* (4.98 to 5.08 V)	0.5

Note : Level Commands are executed following receipt of the LEV LATCH pulse command.

Table 3.2.3-3 : *Instrument Analog Telemetry vs. Commands (1/2)*.

#	Telecommand	Analog Telemetry Status	Timing (Sec)
C11	e CDEM HV 0	*TED E CDEM HV = Nominal* for Level 000	0.5
C12	e CDEM HV 1	*TED E CDEM HV = Nominal* for Level 001	0.5
C13	e CDEM HV 2	*TED E CDEM HV* = Nominal for Level 010	0.5
C14	e CDEM HV 3	*TED E CDEM HV* = Nominal for Level 011	0.5
C15	e CDEM HV 4	*TED E CDEM HV* = Nominal for Level 100	0.5
C16	e CDEM HV 5	*TED E CDEM HV = Nominal* for Level 101	0.5
C17	eCDEMHV6	*TED E CDEM HV = Nominal* for Level 110	0.5
C18	eCDEMHV7	*TED E CDEM HV* = Nominal for Level 111	0.5
C19	p CDEM HV 0	*TED P CDEM HV = Nominal* for Level 000	0.5
C20	p CDEM HV 1	*TED P CDEM HV = Nominal* for Level 000	0.5
C21	p CDEM HV 2	*TED P CDEM HV* = Nominal for Level 001	0.5
C22	p CDEM HV 3	*TED P CDEM HV = Nominal* for Level 010	0.5
C23	p CDEM HV 4	*TED P CDEM HV* = Nominal for Level 011	0.5
C24	p CDEM HV 5	*TED P CDEM HV = Nominal* for Level 100	0.5
C25	p CDEM HV 6	*TED P CDEM HV = Nominal* for Level 101	0.5
C26	p CDEM HV 7	*TED P CDEM HV = Nominal* for Level 111	0.5
C27	e PHD LV 0	*None*	-
C28	e PHD LV 1	None	-
C29	e PHD LV 2	None	-
C30	e PHD LV 3	None	-
C31	p PHD LV 0	None	-
C32	p PHD LV 1	*None*	-
C33	p PHD LV 2	None	-
C34	p PHD LV 3	None	-
C35	TED IFC On	None	-
C36	TED IFC Off	*None*	-
C37	MEP IFC On	None	-
C38	MEP IFC Off	None	-
C39	µP B WD Reset	None	-
C40	µP A WD Reset	None	-
C41	µP WD Test	None	-
C42	NOP	None	-

Note : Level Commands are executed following receipt of the LEV LATCH pulse command.

Table 3.2.3-3 : ***Instrument Analog Telemetry vs. Commands (2/2)***

3.2.4. Telecommand Verification

No check shall be performed by the satellite to verify whether the command is consistent with the active instrument mode.

The execution of each command shall be verified by the spacecraft by monitoring the corresponding Digital B telemetry made available by the instrument. The interrelationship, between commanding and the verification of a wmmand in the Digital B telemetry is defined in Table 3.2.4-1. The column "Timing" specifies the maximum time delay between the arrival of a wmmand in the instrument and change of the corresponding Digital B parameter.

In case a command does not induce a change in the instrument Digital B data, no execution verification of this command will be performed by the satellite.

The parameter value acquired apart from the routine HK cycle will be discarded after verification and not transmitted to ground. Execution failure will be reported in the history area

In case of a command execution error by the SEM-2, the NIU shall report this error to the ground ; no autonomous corrective action, including SEM-2 switch-off, shall be performed by METOP satellite.

#	Command	Constraint	Command Verification Digital B	Timing (s)
PULSE COMMANDS				
1	Level Latch Command		Not applicable	
2	µP A Select		µP System ID = Logic '0'	*
3	µP B Select		µP System ID = Logic '1'	*
4	MEPED Bias ON		None	-
5	DPU / µP B ON		None	-
6	DPU / µP A ON		None	-
7	SEM Off		None	-
LEVEL COMMANDS (COMBINED)				
C1	TED LV Off		None	-
C2	Sweep Off		None	-
C3	e CDEM HV Off		None	-
C4	p CDEM HV Off		None	-
C5	MEPED LV Off		None	-
C6	TED LV On		None	-
C7	Sweep On		None	-
C8	e CDEM HV On		None	
C9	p CDEM HV On		None	
Cl0	MEPEDLV On		None	-

* : These commands are nominally issued before the DPU is turned on ; therefore, Dig. B data is not available.

Table 3.2.4-I : Telecommand Verification (1/2)

#	Command	constraint	Command Verification Digital B	Timing (s)
C11	e CDEM HV 0		None	-
C12	e CDEM HV 1		None	-
C13	e CDEM HV 2		None	-
C14	e CDEM HV 3		None	-
C15	e CDEM HV 4		None	-
C16	e CDEM HV 5		None	-
C17	e CDEM HV 6		None	-
C18	e CDEM HV 7		None	-
C19	p CDEM HV 0		None	-
C20	p CDEM HV 1		None	-
C21	p CDEM HV 2		None	-
C22	p CDEM HV 3		None	-
C23	p CDEM HV 4		None	-
C24	p CDEM HV 5		None	-
C25	p CDEM HV 6		None	-
C26	p CDEM HV 7		None	-
C27	e PHD LV 0		*TED e PHD LSB* = Logic 0 *TED e PHD MSB* = Logic 0	0.5
C28	e PHD LV 1		*TED e PHD LSB* = Logic 1 *TED e PHD MSB* = Logic 0	0.5
C29	e PHD LV 2		*TED e PHD LSB* = Logic 0 *TED e PHD MSB* = Logic 1	0.5
C30	e PHD LV 3		*TED e PHD LSB* = Logic 1 *TED e PHD MSB* = Logic 1	0.5
C31	p PHD LV 0		*TED p PHD LSB* = Logic 0 *TED p PHD MSB* = Logic 0	0.5
C32	p PHD LV 1		*TED p PHD LSB* = Logic 1 *TED p PHD MSB* = Logic 0	0.5
C33	p PHD LV 2		*TED p PHD LSB* = Logic 0 *TED p PHD MSB* = Logic 1	0.5
C34	p PHD LV 3		*TED p PHD* LSB = Logic 1 *TED p PHD* MSB = Logic 1	0.5
C35	TED IFC On		*TED IFC* = Logic 1	≤ 64
C36	TED IFC Off		*TED IFC* = Logic 0	0.5
C37	MEP IFC On		*MEPED IFC* = Logic 1	≤ 64
C38	MEP IFC Off		*MEPED IFC* = Logic 0	0.5
C39	µP B WD Reset		*µP B Watch Dog* = Logic 0	0.1
C40	µP A WD Reset		*µP A Watch Dog* = Logic 0	0.1
C41	µP WD Test		*µP A Watch Dog* or *µP B Watch Dog* = Logic 1	0.5
C42	NOP		None	-

Table 3.2.4-I : *Telecommand Verification (2/2)*

3.25. METOP Specific Thermal Control Electrical Interfaces

This section is not applicable to the DPU.

In all modes, heater power is required for the TED and MEPED units and is supplied by the TCU.

The operational thermistor / heater hardware is accommodated within the MEPED and TED by the Instrument Supplier and connected to MPD JO5 for MEPED and TED JO4 for TED. The thermistors (one per unit) for the heater control are defined in § 3.5.2.1.2. The operational heater (one heater) for MEPED is defined in § 2.3. The operational heater (one heater) for TED is defined in § 2.3.

When not operating, the unit temperatures are maintained by survival heaters activated by thermostats. These are external to the TED and MEPED and do not realise an electrical interface between the units and METOP.

3.2.6. Satellite Services / Synchronization

Note : Satellite Services are defined as all Command and Control and Measurement Data Acquisition tasks which will be performed by the PLM or the SVM to support instrument operations.

Note : the synchronization of measurement data read-out is defined in § 3.3.2.

The NIU shall provide to the instrument :

- a 32 second sync. pulse

  The Major Frame Sync (32 s) synchronizes the instrument output data format as defined in § 3.3.2.

- a clock signal of 1.248 MHz

The Major Frame Sync (32 s) is phase correlated to the 1.248 MHz clock as shown in Figure 3.2.6.1-1.

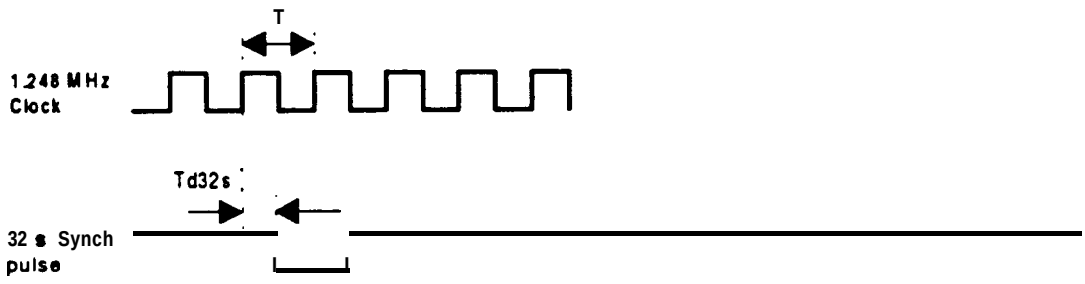

- T = 1/1.248 MHz = 0.80128 µseconds
- Td32s < T

Figure 3.2.6.1-I : Time Correlation Between Major Frame Sync (32 s) and 1.248 MHz Clock

3.3. MEASUREMENT DATA TRANSFER FUNCTIONAL DESCRIPTION

33.1. Data Rate

In On and Calibration Modes, the SEM-2 generates 640 bytes of Digital A data per 32 seconds.

Every 100 ms, the NIU acquires 2 8-bit words from the SEM-2. Hence an apparent raw data rate of 16Obitspersecond

Note : These data are not packetized within the instrument.

3.3.2. Measurement Data Acquisition

The measurement data shall be acquired via the digital A data interface.

The interface shah consist of the :
- data enable pulse line
- data clock line
- data line.

The SEM-2 data are clocked into the NIU by means of the data clock (8.32 kHz), whenever the data enable pulse is presented to the instrument

Both clock and synch pulse shall be delivered by the NIU.

The transfer shall be organised in words of 8 bits.

The words shall be separated by a gap in the data enable pulse.

The data acquisition shall be as detailed in Figures 3.3.2-1a and 3.3.2-1b.

2 x 8 bit SEM-2 data are stored internally in the instrument within a register which is updated every 0.1 second with new data. The first data word of a 32 second cycle will be available for readout Td_{SEM} after start of the respective cycle (refer to Figure 3.3.2-1a).

Td_{SEM} defines the start of the Data Enable pulse relative to the start the 0.1 seconds (NIU internal) cycle.

Td_{SEM} shall be $(24 * 8 * T_{8.32k} + 2 * T_{8.32k}/5)$. $T_{8.32k}$ is the time period of the 8.32 kHz Clock (CLU).
Note : Td_{SEM} is approximately 23.13 ms $\pm 10^{-4}$

During the (continuous) data acquisition, the Data Enable pulse shall repeat after Ts_{SEM}. Ts_{SEM} shall be $8 * T_{8.32k}$.
Note : Ts_{SEM} is approximately 961.5 $\mu s \pm 10^{-4}$

The words shah be separated by a gap in the Data Enable pulse acc. to Figure 3.3.2-1b.

The 1.248 MHz Clock and the 8.32 kHz are derived from a free running oscillator in the NIU. The Major Frame Sync.(32 s) is derived in the NIU from the OBDH Bus Broadcast Pulse. The OBDH Bus

Broadcast Pulse is generated by the oscillator in the CCU on the Service Module. The leading edge of the 32 s Pulse will be phase correlated to the 1.248 MHz Clock.

Each of these two oscillators has its own initial setting failure, temperature drift and ageing. This will result in a tolerance of the number of clocks per Sync. Pulse period as depicted in Table 3.3.2.-1. The specified tolerances are the maximum tolerances during mission lifetime and over nominal temperature range conditions.

	Sync 0.1s	Sync. 32 sec
No. of 1.248 MHz cycles	124800 ± 150 *)	$39.936 \cdot 10^6 \pm 4793$
No. of 8.32 kHz cycles	832 ± 1 *)	$266.24 \cdot 10^3 \pm 32$

*) Tolerance figure for last (10th) 0.1 s period of a 1 s cycle only. For the 9 first cycles the tolerance figure is ± 0. The tolerance range does not affect METOP specified data transfer.

Table 3.3.2.-1: Sync. *Period Tolerances in Numbers of 1.248 MHz and 8.32 kHz Cycles*

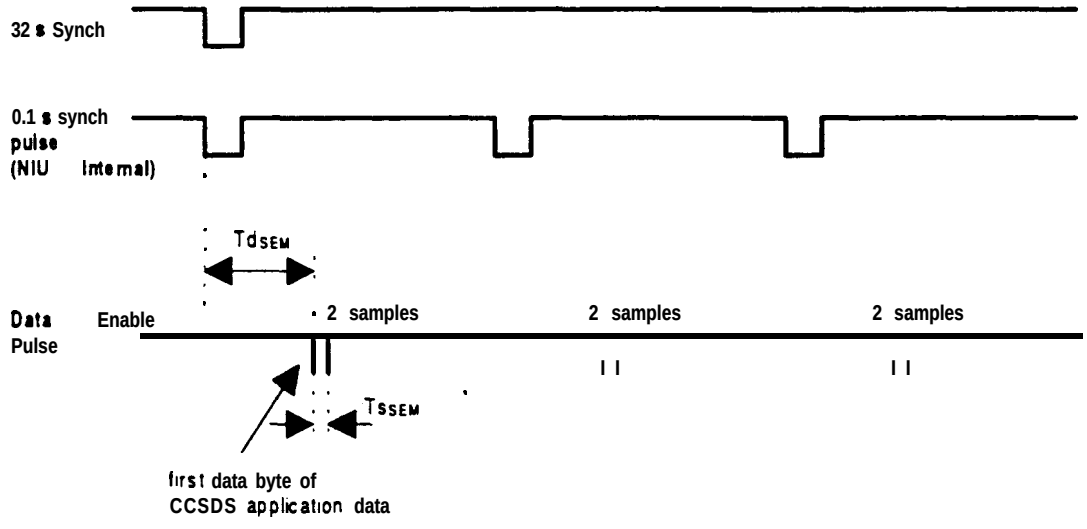

Figure 3.3.2.-1a: SEM-2 Measurement Data Acquisition Sampling Timing

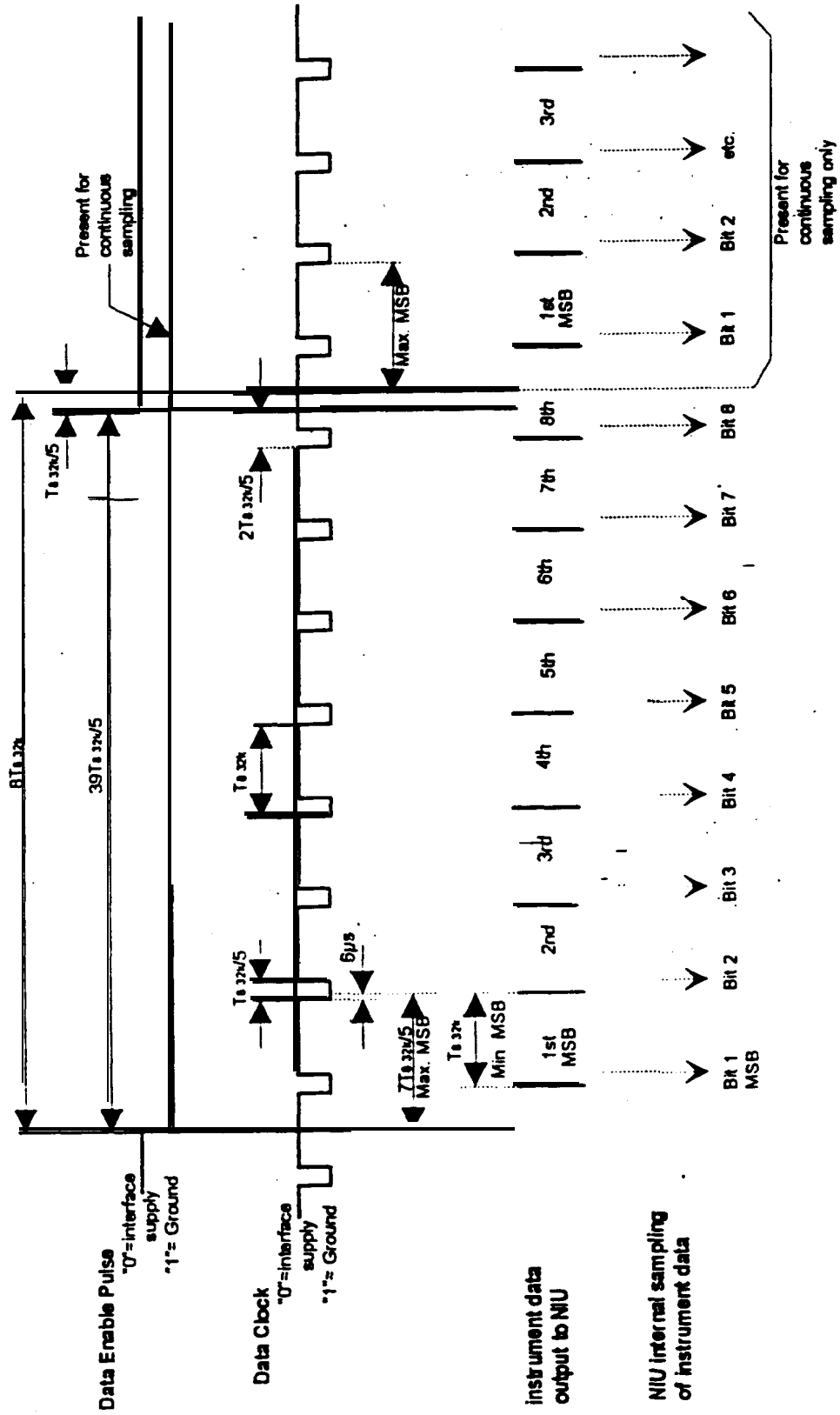

Figure 3.3.2.-1b : SEM-2 Measurement Data Acquisition

3.33. Measurement (Digital A) Data Format

333.1. SEM-2 On Mode

The SEM-2 synchronizes the output data format with the start of each 32 second synchronisation pulse.

A total of 640 words is generated :

- 336 for the MEPED data
- 288 for the TED data
- 10 for the analog telemetry data, 5 of which are sub-commuted
- 3 for the Digital B data (bi-level data), 1 of which is sub-commutated
- 2 for synchronization
- 1 for checksum

The SEM-2 digital A telemetry format is shown in Table 3.3.3/1, which identifies the data assignments for each of the two SEM-2 data words (Word #20 & 21), in the 320 O.l-sec. minor frames constituting one 32-sec. major frames (words 20 21, minor frame and major frame are TIROS terminology).

A one word checksum for the preceding major frame, is provided. It consists of the summation of all Digital A data words in the previous Major Frame, including the checksum.

The MEPED digital A data consists of six directional proton measurements and three directional electron measurements for each of the two directions of incidence (0 and 90 deg.), and four omni-directional proton measurements. This is illustrated in Table 3.3.3/2.

The TED Digital A data consists of a 0.05 to 1 keV partial energy flux measurement, a 1 to 20 keV partial energy flux measurement, maximum differential energy fluxes, four-point differential energy spectra and background measurements for electrons and protons, each at two angles of incidence (0 and 30 deg.). This is illustrated in Figure 3.3.3/3.

Ten Digital A data words are assigned to analog housekeeping signals, as illustrated in Figure 3.3.3/4. Of these , five are sub-commutated and their data assignments are illustrated in Figure 3.3.3/5.

Three Digital A data words are assigned to Bi-level and Digital B telemetry signals, as illustrated in Figure 3.3.3/6. One of these is sub-commutated and its data assignments is illustrated in Figure 3.3.3/7.

Two synchronization words are provided : minor frame 311, word 20, F3 HEX and minor frame 312, word 20.50 HEX.

Note : The SEM-2 Digital A data output is positive logic (logic "0" = 0 V ; Logic "1" = +10 V).

Particle Type	Sensor Direction	Detected Energy Range	Readout Time	Mnemonic
Proton	Directional 0 / 90 degrees	30 - 80 keV	every 2 seconds	0P1, 9P1
		80 - 250 keV	every 2 seconds	0P2, 9P2
		250 - 800 keV	every 2 seconds	0P3, 9P3
		800 - 2500 keV	every 2 seconds	0P4, 9P4
		2500 - 7000 keV	every 2 seconds	0P5, 9P5
		> 7000 keV	every 2 seconds	0P6, 9P6
Electron	Directional 0 / 90 degrees	≥ 30 keV	every 2 seconds	0E1, 9E1
		≥ 100 keV	every 2 seconds	0E2, 9E2
		≥ 300 keV	every 2 seconds	0E3, 9E3
Proton	Omni-directional	≥ 16 MeV	every 2 seconds	P6
		≥ 35 MeV	every 2 seconds	P7
		≥ 70 MeV	every 4 seconds	P8
		≥ 140 MeV	every 4 seconds	P9

***Table 3.3.3/2** : **MEPED** Digital A Data*

Definition (Note 1)	Readout Time	Mnemonic	Notes
Partial Energy Flux (0.05 - 1 keV)	every 2 seconds	0EFL, 0PFL, 3EFL, 3PFL	
Partial Energy Flux (1 - 20 keV)	every 2 seconds	0EFH, 0PFH, 3EFH, 3PFH	
Maximum Differential Energy Flux	every 2 seconds	ODEM. ODPM. 3DEM, 3DPM	
Energy of Maximum Differential Energy Flux	every 2 seconds	OEM. OPM. 3EM, 3PM	2
Four Point Energy / Flux Spectrum	every 8 seconds	0DE1, 0DE2, 0DE3, 0DE4 3DE1, 3DE2, 3DE3, 3DE4 0DP1, 0DP2, 0DP3, 0DP3 3DP1, 3DP2, 3DP3, 3DP4	3.4
Background	every 32 seconds	OEBKH, OEBKL, 0PBKH, OPBKL 3EBKH, 3EBKL, 3PBKH, 3PBKL	

Notes : 1. Four sets of measurements are made : electrons at 0 deg., protons at 0 deg., electrons at 30 deg., protons at 30 deg.
2. Four bits each, combined into two data words (OEM / OPM and 3EM / 3PM)
3. Differential energy channels 4, 8, 11, 14 (based on 1-16)
4. The four-point proton spectra are telemetred three times every 32 times

***Table 3.3.3/3** : **TED** Digital A Data*

Minor Frame	Word	Mnemonic	Data Assignment	Source	Also provided as Analog HK
20	20	TED SWP V (AN SUB 5)	TED Sweep Voltage Monitor (Analog Sub-commutator 5)	TED	Yes
40	20	TED e CDEMHV	TED Electron CDEM High Voltage Monitor	TED	Yes
60	20	TED p CDEM HV	TED Proton CDEM High Voltage Monitor	TED	Yes
80	20	MEPOMNIBV	MEPED Omni-directional Sensor Bias Voltage Monitor	MEPED	Yes
100	20	AN SUB 1	Analog sub-commutator 1		
120	20	AN SUB 2	Analog Sub-commutator 2		
140	20	AN SUB 3	Analog sub-commutator 3		
160	20	AN SUB 4	Analog Sub-commutator 4		
180	20	TED IFC V	TED IFC Ramp Voltage Monitor	TED	
200	20	MEP IFC V	MEPED IFC Ramp Voltage Monitor	MEPED	

Readout time : every 32 seconds

Table *3.3.3/4* : *Digital A Analog Housekeeping Data Assignments*

Analog Subcommutator	Mnemonic	Data Assignment	Source	Also provided as Analog HK
ANALOG SUB-COMMUTATOR 1				
0 . 8	µP SYS A +5V	Microprocessor System A +5 Volt Monitor	DPU	Yes
1 . 9	µP SYS B +5V	Microprocessor System B +5 Volt Monitor	DPU	Yes
2 , 10	DPU +5V	DPU +5 Volt Monitor	DPU	Yes
3.11	DPU +10V	DPU + 10 Volt Monitor	DPU	
4.12	DPU +6V	DPU +6 Volt Monitor	DPU	
5 . 13	DPU -6V	DPU -6 Volt Monitor	DPU	
6 . 14	DPU TEMP	DPU Temperature Monitor	DPU	
7. 15	DPUREF	DPU DAC Reference Voltage Monitor	DPU	
ANALOG SUB-COMMUTATOR 2				
0, 8	MEP +6.5V	MEPED +6.5 Volt Monitor	MEPED	
1, 9	MEP +7.8V	MEPED +7.8 Volt Monitor	MEPED	
2, 10	MEP -7.8V	MEPED -7.8 Volt Monitor	MEPED	
3 , 11	MEP +5V	MEPED +5 Volt Monitor	MEPED	Yes
4, 12	MEP +6.2V	MEPED +6.2 Volt Monitor	MEPED	
5, 13	MEP -6.2V	MEPED -6.2 Volt Monitor	MEPED	
6 . 14	PEP p TEL BV	MEP Proton Telescope Bias Voltage Mon.	MEPED	
7, 15	MEP e TEL BV	MEP Electron Telescope Bias Volt. Mon.	MEPED	
ANALOG SUB-COMMUTATOR 3				
0, 8	MEP IFC REF	MEPED IFC Reference Voltage Monitor	MEPED	
1, 9	MEP 0 DEG REF	MEPED 0 deg. D4, D5 Sensor Threshold Reference Voltage Monitor	MEPED	
2, 10	MEP 90 DEG REF	MEPED 90 deg. D6, D7 Sensor Threshold Reference Voltage Monitor	MEPED	
3, 11	MEP p TEL TEMP	MEPED Proton Telescope Temp. Monitor	MEPED	
4, 12	MEP e TEL TEMP	MEPED Electron Teles. Temp. Monitor	MEPED	
5, 13	MEP OMNI TEMP	MEPED Omni-directional Temp. Monitor	MEPED	
6, 14	MEP ELEC TEMP	MEPED Electronic Temperature Monitor	MEPED	
7, 15	TED TEMP	TED Temperature Monitor	TED	

Readout time : every 5 12 seconds (i.e. 16 x 32 seconds)

Data points are read every 256 seconds since they are read twice per sub-commutator main frame

Table *3.3.3/5 : Digital A Analog Sub-Commutator Data Assignments (1/2)*

Analog subcom mutator	Mnemonic	Data Assignment	source	Also provided as Analog HK
ANALOG SUB-COMMUTATOR 4				
0 . 8	TED +8V	TED +8 Volt Monitor	TED	
1 . 9	TED +5V	TED +5 Volt Monitor	TED	Y e s
2.10	TED -6V	TED -6 Volt Monitor	TED	
3.11	TED +30V	TED +30 Volt Monitor	TED	
4.12	TED -30V	TED -30 Volt Monitor	TED	
5, 13	TED +100V	TED + 100 Volt Monitor	TED	
6.14	TED -1000V	TED -1000 Volt Monitor	TED	
7, 15	TED IFC REF	TED IFC Reference Voltage Monitor	TED	
ANALOG SUB-COMMUTATOR 5				
0, 8	TED SWP V 1	TED Sweep Voltage Monitor, Step 0 (based on O-63)	TED	See Note
1.9	TEDSWPV2	TED Sweep Voltage Monitor, Step 8 (based on O-63)	TED	
2. IO	TED SWP V 3	TED Sweep Voltage Monitor, Step 16 (based on O-63)	T E D	
3.11	TEDSWPV4	TED Sweep Voltage Monitor, Step 24 (based on 0-63)	TED	
4.12	TED SWP V 5	TED Sweep Voltage Monitor, Step 32 (based on 0-63)	TED	
5.13	TED SWP V 6	TED Sweep Voltage Monitor, Step 40 (based on O-63)	TED	
6.14	TEDSWPV7	TED Sweep Voltage Monitor. Step 48 (based on O-63)	TED	
7.15	TED SWP V 8	TED Sweep Voltage Monitor, Step 56 (based on O-63)	TED	

Note : the eight (8) TED Sweep Voltage Monitors (TED SWP 1 to TED SW V 8) are sweep correlated samples of the TED Sweep voltage Analog Monitor Output (TED SWP V), which is a continuous monitor of the TED Sweep Voltage

Readout time : every 512 seconds (i.e. 16 x 32 seconds)

Data points are read every 256 seconds since they are read twice per sub-commutator main frame

Table 3.3.3/5 : Digital A Analog Sub-Commutator Data Assignments (2/2)

Bit	Mnemonic	Data Assignment	Source	Also provided as Digitai B
Bi-level Word 1 (Minor Frame 220, Word 20)				
1	SUB FC1	Subcom Frame Counter 2**0	DPU	
2	SUB FC2	Subcom Frame Counter 2**1	DPU	
3	SUB FC4	Subcom Frame Counter 2**2	DPU	
4	SUB FC8	Subcom Frame Counter 2**3	DPU	
5	ERR FLAG	Error Flag (inclusive OR of all error flags)	DPU	(1 = error ; 0 = no error)
6	-	*Spare*		
7	-	*Spare*		
8	µP SYS ID	Active µP System ID	DPU	Yes
Bi-level Word 2 (Minor Frame 240, Word 20)				
1	e PHD LSB	TED e discriminator control LSB	DPU	Yes
2	e PHD MSB	TED e discriminator control MSB	DPU	Yes
3	p PHD LSB	TED p discriminator control LSB	DPU	Yes
4	p PHD MSB	TED p discriminator control MSB	DPU	Yes
5	TED IFC	TED IFC Status	TED	Yes
6	TED IFC PU	TED IFC Pulser Status (1 = IFC Pulser On ; 0 = IFC Pulser Off)	TED	
7	MEP IFC	MEPED IFC Status	MEPED	Yes
8	MEP IFC PH	MEPED IFC Phase (1=IFC Phase 1 ; 0=IFC Phase 0)	MEPED	
Bi-level Sub-Commutator (Minor Frame 260, Word 20)				
See Table 3.3.3/7				

Readout time : every 32 seconds

Table 3.3.3/6 : Digital A Analog Housekeeping Data Assignments

Analog Subcom mutator	Mnemonic	Data Assignment	Source	Notes
0	CDEM HV STAT	TED CDEM HVPS Status	DPU	See Table 3.3.3/8
1	µP WD CNT	Active µP System Watchdog Counter	DPU	
2	LAST CMD	Last Level Command Received	DPU	
3	SYS TEST 1	System Test Status 1	DPU	See Table 3.3.3/8
4	TED CFG 1	TED Configuration Byte 1 (LSB)	DPU	
5	TED CFG 2	TED Configuration Byte 2	DPU	
6	TED CFG 3	TED Configuration Byte 3	DPU	
7	TED CFG 4	TED Configuration Byte 4 (MSB)	DPU	
8	CDEM HV STAT	TED CDEM HVPS Status	DPU	See Table 3.3.3/8
9	µP WD CNT	Active µP System Watchdog Counter	DPU	
10	LAST CMD	Last Level Command Received	DPU	
11	SYS TEST 2	System Test Status 2	DPU	See Table 3.3.3/8
12	ROM1 CKS	Active µP System ROM1 Cheksum	DPU	
13	ROM2 CKS	Active µP System ROM2 Cheksum	DPU	
14	AD HI Z CAL	A to D Converter 50% Cal, High Z	DPU	Analog monitor
15	AD LO Z CAL	A to D Converter 50% Cal. Low Z	DPU	Analog monitor

Readout time : every 5 12 seconds (i.e. 16 x 32 seconds)

(Minor Frame 260. Word 20)

Table 3.3.3/7 : Digital A Bi-Level Sub-Commutator Data Assignments

Bit	Mnemonic	Data	Source	Notes
DIGITAL A BI-LEVEL SUB-COMMUTATOR FRAMES 0 AND 8 BIT ASSIGNMENTS				
1	e HVPS CTR1	TED Electron CDEM HVPS Control 2**0	DPU	
2	e HVPS CTR2	TED Electron CDEM HVPS Control 2**1	DPU	
3	e HVPS CTR4	TED Electron CDEM HVPS Control 2**2	DPU	
4	p HVPS CTR1	TED Proton CDEM HVPS Control 2**0	DPU	
5	p HVPS CTR2	TED Proton CDEM HVPS Control 2**1	DPU	
6	p HvPsCTR4	TED Proton CDEM HVPS Control 2**2	DPU	
7	-	*Spare*		
8	-	*Spare*		
DIGITAL A BI-LEVEL SUB-COMMUTATOR FRAME 3 BIT ASSIGNMENTS				
1	MFS ERR	Major Frame Synch Err	DPU	1 = Error 0 = No Error
2	DIG A ERR	Digital A Data Control Error	DPU	1 = Error 0 = No Error
3	DATA ERR	Data Accumulation Interval Error	DPU	1 = Error 0 = No Error
4	SER LNK ERR	TED Serial Link Parity Error	DPU	1 = Error 0 = No Error
5	PWR UP ERR	Power Up Error	DPU	1 = Error 0 = No Error
6	CMD ERR	Command Processing Error	DPU	1 = Error 0 = No Error
7	RWM TST ERR	Active µP System Read Write Memory Test Error	DPU	1 = Error 0 = No Error
8	WD ERR	Active µP System Watchdog Error	DPU	1 = Error 0 = No Error
DIGITAL A BI-LEVEL SUB-COMMUTATOR FRAME 11 BIT ASSIGNMENTS				
1	TED CFG ERR	TED Configuration Plug Decoding Error (Invalid factors default to 1)	DPU	1 = Error 0= No Error
2	SUB INT ERR	Sub-Interval Time-Out Error (Sub-interval not 0.2 seconds)	DPU	1 = Error 0 = No Error
3	CTR OVF ERR	Compression Counter Overflow (Data held at FF HEX)	DPU	1 = Error 0= No Error
4	-	*Spare*		
5	-	*Spare*		
6	-	*Spare*		
7	-	*Spare*		
8	-	*Spare*		

Readout time : every 5 12 seconds (i.e. 16 x 32 seconds)

Subcom. frames 0 & 8 data points are read every 256 sec.(read twice per sub-commutator main frame)

Table 3.3.3/8 : Digital A Bi-Level Sub-Commutator Frame 0, 3, 8 and 11 Bit Assignments

3.3.3.2. SEM-2 Calibration Mode

The Digital A data output format during TED and / or MEPED IFC is the same as the data format described in § 3.3.3.1.

Note : the Subcommutator Count is not affected by the IFC triggering on or off.

3.4. POWER ELECTRICAL INTERFACES

3.4.1. Overview

The SEM-2 instrument requires the following power interfaces :

- A regulated + 28 V Main Power Bus as primary source for the instrument.
- A regulated + 28 V Switched TLM Bus for powering temperature telemetry.
- A regulated + 10 V Interface Bus for the command, clock, Digital B telemetry and measurement data interface circuits.
- An unregulated +21.5 to +37.5 Volt Hearer Power Bus, to supply the SEM-2 TED and MEPED heaters in all operational modes.

  An unregulated +21.5 to +37.5 Volt Survival Heater Power Bus, to supply the SEM-2 TED and MEPED thermostat-controlled heaters in non-operating modes.

The +28 V Main Power Bus and the +28 V Switched TLM Bus are conditioned by the internally redundant Power Conversion Unit (PCU). The +28 V Main Power Bus is individually switched and protected. The +28 V Switched TLM Bus is powered whenever the PCU is on The +10 V Interface Bus is provided by the NIU. This is illustrated in Fig. 3.4.1-1.

Fig. 3.4.1-2 gives details of the SEM-2 internal power distribution.

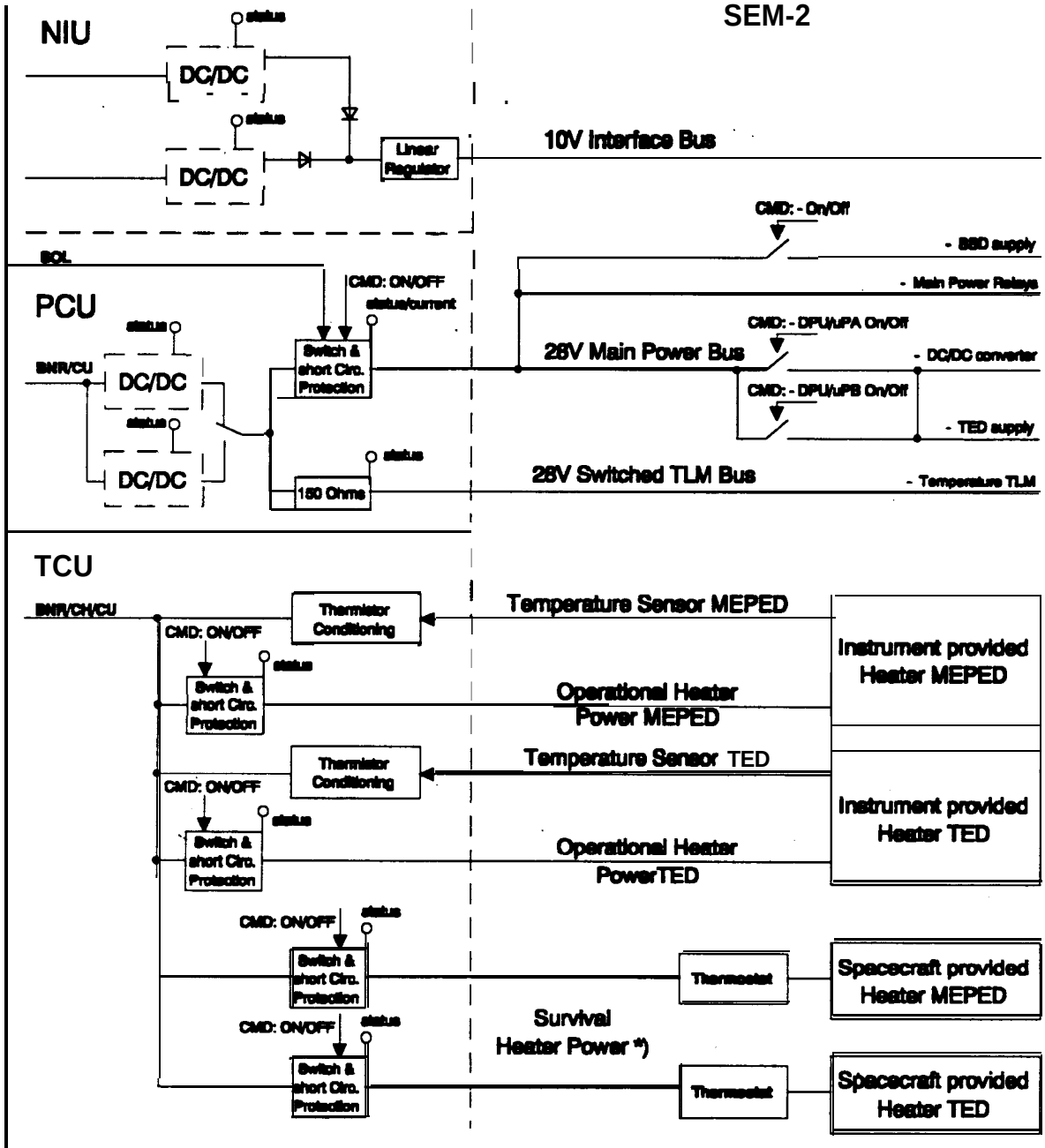

*) Electrical interface for Survival Heater Power is METOP internal, not specified in this document.

Fig. 3.4.1-1 : SEM-2 Power Distribution Diagram

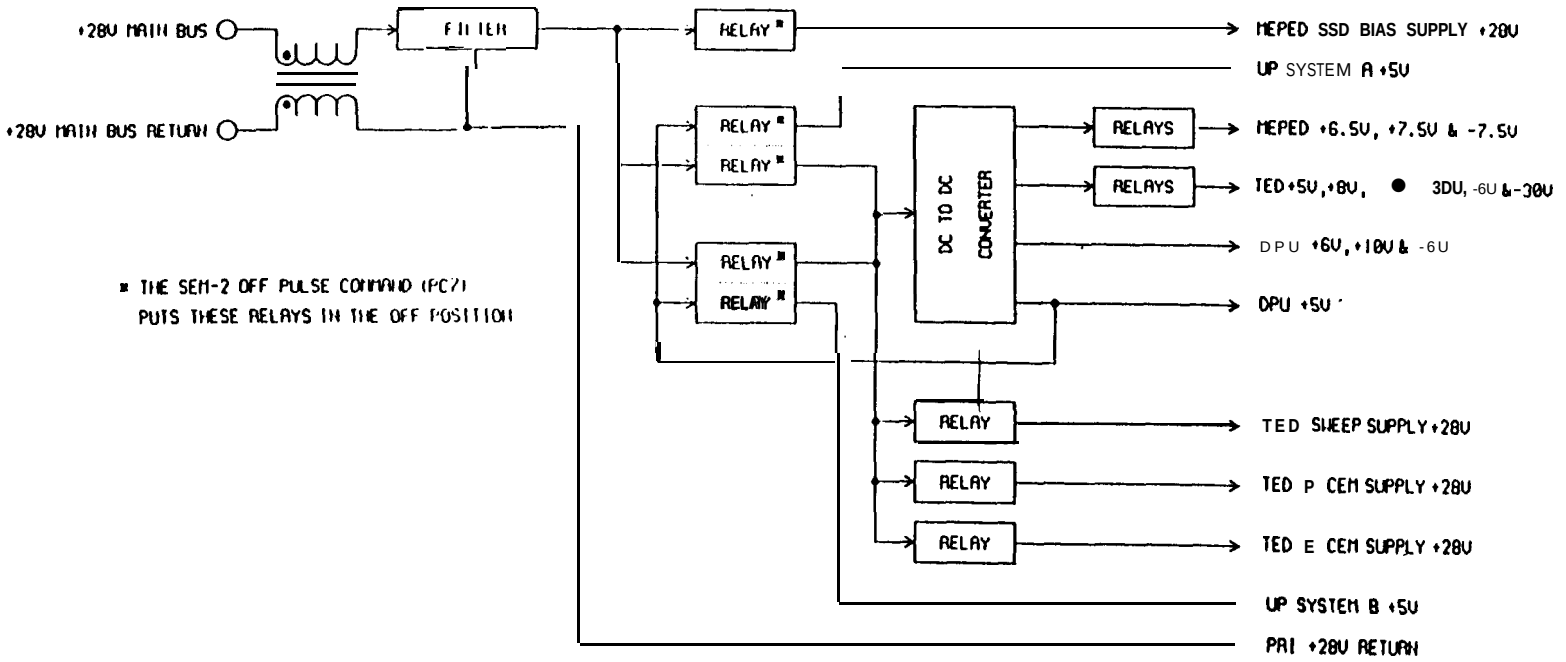

Fig. 3.4.1-2 : SEM-2 Internal Power Distribution Diagram

3.4.2. Power Demand

The actual power demauds for SEM-2 on the iudividual power busses for BOL & EOL during all modes and required outlet dimensions are defined in Table 3.4.2-l Power Consumption Data Sheet.

The heater power for the SEM-2 DPU is not an instrument electrical interface and therefore not dealt within the following table.

Definitions

Typical Beginning of Life Power

Power expected to be measured during instrument acceptance test, = basic power.

Worst Case End of Life Power.

Specified power the instrument shall never exceed (except in case of failure).

Mean ***Power***

Steady state power consumed when the power bus is set at its mean voltage and with a 25 deg. *C* temperature.

Min. /Mar Power

Min. / ***max.*** steady state power consumed as a function of power bus input voltage and instrument temperature.

Peak Power

Total power consumed during a peak, i.e. corresponding to an event of finite duration during the considered functional mode. The peak power is given at mean power bus voltage and with a 25 deg. C temperature. The peak power is characterized by a peak duration and / or a peak repetition duty cycle.

Failure Power Consumption

Maximum permanent power that will be consumed without triggering an internal protection or without leading to a fuse blowing.

dP/dV @ 25 deg. C

Mean variation of the consumed power with respect to the input voltage.

Table 3.4.2-l : Power Consumption Data Sheet[3]

SEM-2

dP/dV @ 25 deg. C

		Typical Beginning of Life (W)						Worst Case End of Life (W)						
Instr. Mode	**Power Bus**	Mean Power	Min. Power	**Max.** Power	Peak Power	Peak Duration	**Peak Duty** Cycle	Mean Power	Min. Power	Max. Power	Peak Power	Peak Duration	Peak Duty Cycle	**Failure Power**
Off Mode	28 V Main Bus	0		-	- -	-		0		-	- -	-		
	28VSwitchedTMBus	0.044			0 / -	- - -		0 / 0.05	-	-	-	-		
	10 V Interface Bus	0		-	- -	-		0		-	- -	-		
	Heater Power Bus	**N/A**						**N/A**						
	TOTAL	*0.00 / 0.04*	-	.	-	-		*0.00 / 0.05*	-	-	-	-		
On and Cal. Modes	28 V Main Bus	5.66						8.78						
	28 V Switched TM Bus	0.04						0.05						
	10 V Interface Bus	0.01						0.02						
	Heater Power **Bus[5]**	TBD						TBD						
	TOTAL	*TBD*						*TBD*						

3 Heater power during Off Mode not dealt within this table : not considered as an electrical interface with the SEM-2.

4 In Off Mode, the power consumption on the Switched Temperature Telemetry bus is 0.04 W when this bus is available at the instrument interface. Otherwise it is **0** W.

5 The power consumption on the Heater Power Bus in SEM-2 On and Calibration Modes is 2.09 W Max.

3.4.3. Power Electrical Interface Requirements

In order to structure the electrical interfaces, all signals to be controlled by this document will be identified and classified into a certain number of signal types. For each signal type a three character identifier code is given as defined in the corresponding tables.

Table 3.4.3-l shows the power interfaces used by the SEM-2 and the corresponding data sheet identifiers.

	Data Sheet Code	Interface Circuit
+28 V Main Power Bus SEM-2	APB	Fig. 3.4.3.2-l
+28 V Switched TLM Bus SEM-2	BPB	Fig. 3.4.3.2-2
+10 V Interface Bus SEM-2	DPB	Fig. 3.4.3.2-3
Heater Power Bus (Operational)	JPB	Fig. 3.4.3.2-4

Table* 3.4.3-l : *SEM-2 Power Interfaces

Within the Power Interface Data Sheets in § 3.4.3.1 the electrical characteristics of the power I/Fs are &fined.

3.4.3.1. Power Interface Data Sheets

On the following pages the electrical characteristics of the power interfaces are defined with one Data Sheet per signal. In Table 3.4.3-l: 'SEM-2 Power Interfaces' and § 3.4.5 'Power Pin Allocation Lists' is referenced to these Data Sheets.

The performances specified in the Data ***Sheets are*** maintained during the mission lifetime and under nominal load and temperature range conditions. ***Source*** specifications have to be measured at the connector of the source and load specifications have to be measured at the connector of the load unless specified otherwise.

Parameter Definitions

Small Signal Impedance

Output impedance of the power supply tested with, compared to 28V, small AC signals.

Output Impedance

Linear output impedance of the power supply.

Voltage Ripple

Sinusoidal voltage ripple, including repetitive spikes and voltage drop caused by the instruments current ripple.

Under- Voltage (incl. ripple & trans.)

The specified voltage range will be considered as under-voltage.

Over-Voltage (incl. ripple & trans.)

'The specified *voltage* range will be considered as over-voltage.

Transients

Positive or negative going, non repetitive spikes caused by load current changes.

Max. Steady-State Current

Maximum power as defined in the Power Consumption Data Sheet, divided by the minimum specified nominal voltage.

Current Ripple

Ripple caused by the load pulsed currents (DC/DC converter, stepper motors...).

Inrush Current

Maximum allowed input current for a restricted time, when the load is switched on.

Inrush Current Rate

Rate-of-change of the input current over time when the load is switched 'on'.

Signal Nomenclature	**28 V Main Power Bus**	
Code	APB	
EMC Class	Power	
Power Source Specification		
Parameter	**Requirement**	**Remarks**
Voltage	27.16 . . . 28.84 V	at SEM-2 input
Small Signal Impedance	< 0.3 Ω	f < 100 kHz, short circuit protection & line < 0.1Ω
Voltage Ripple	See § 4.3.1.2.	
Under-Voltage (incl. ripple & trans.)	> 16 V ; < 27.16 V	for < 3 s
Over-Voltage (incl. ripple & trans.)	> 28.84 V ; < 38.0 V	for < 50 ms
Transients	See § 4.3.1.2.	
Max. Current	< 5.0 A	Limited by short circuit protection
Leakage Current	< 6 mA	Short circuit protection 'Off
Load Specification		
	Requirement	**Remarks**
Max. Steady-State Current	0.8 A	
Current Ripple	< 20 mA_{pp}	f< 100 kHz
Inrush Current:	< 150% Max. Steady-State Curr.	Steady- State after 6 ms
Inrush Current Rate	< 30 mA/µs	
Harness Design		
Parameter	**Requirement**	Remarks
Wiring Type	AWG 20, 4P	

Signal Nomenclature	**+28 V Switched TLM Bus**	
Code	**BPB**	
EMC Class	**Power**	
Power Source Specification:		
Parameter	**Requirement**	**Remarks**
Voltage	27.16 . . . 28.84 V	**at SEM-2** input [6]
Small Signal Impedance	< 160R	**f < 100 kHz**
Voltage Ripple	See § **4.3.1.2.**	
Under-Voltage (incl. ripple & trans.)	> 16.00 ; < 27.16 V	**for < 3 s**
Over-Voltage (incl. ripple & trans.)	> 28.84 ; < 38.00 V	for < 50 ms
Transients	**See § 4.3.1.2.**	
Load Specification		
Parameter	**Requirement**	**Remarks**
Max. Steady-State Current	**3mA**	
Current Ripple	**< 3 mA_{pp}**	**f < 100 kHz**
Inrush Current	**<150%** of Max stdy-state **Curr.**	Steady-State after 30 ms
Harness Design		
Parameter	**Requirement**	**Remarks**
Wiring Type	AWG 24, TP	

[6] **Measured under no ioad condition.**

Signal Nomenclature	**+10 V Interface Bus**	
CO&!	DPB	
EMC Class	Power	
Power Source Specification		
Parameter	**Requirement**	**Remarks**
Voltage	9.5 . . . JO.5 v	at SEM-2 input
Source Current	**< 100 mA**	
Small Signal **Impedance**	**< 1 Ω**	**f < 10 MHz**
Voltage Ripple	**See § 4.3.1.2.**	
Under-Voltage (incl. ripple & trans.):	> 9.0 v ; < 9.5 v	
Over-Voltage (incl. ripple & trans.):	> 10.5 v ; < 15.0 v	
Voltage Transients:	See § 4.3.1.2.	
Load Specification		
Parameter	**Requirement**	**Remarks**
Max. Steady-State Current	**8 mA**	
Current Ripple Supply Line	**< 3 mA_{pp}**	**f < 2.5 MHz**
Current Ripple Return Line	**< 20 mA_{pp}**	**f < 2.5 MHz**
Inrush Current	**<125%** of Max **Stdy-State Cur.**	**for < 60 ms**
Inrush Current Rate	**< 20 mA/µs**	
Harness Design		
Parameter	**Requirement**	Remarks
Wiring Type	AWG 24, **TP**	

Signal Nomenclature	Heater Power Bus	
Code	JPB	
EMC Class	Power	
Power Source Specification		
Parameter	**Requirement**	**Remarks**
Voltage	21.5 . . . 37.5 v	at SEM-2 input
Small Signal Impedance	< 0.4 Ω	f < 100 kHz, short circuit protection & line < 0.1 Ω
Voltage Ripple	< 0.7 V_{pp}	f < 50 MHz
Max. Current	< 5.0 A	Limited by short circuit protection
Leakage Current	< 6 mA	Short circuit protection 'Off
Transients	-12 v ... +12 v	duration: 10 µs
Spikes	2.8 V_{pp}	
Switch On/Off Rise / Fall 'lime	> 1 ms	
Load Specification		
Parameter	Requirement	Remarks
Max. Steady-State Current	TBD_{MET} A	
Current Ripple	< 2% of Max. Stdy-State Curr.	f < 100 kHz
Inrush Current Rate	< 2 A/µs	
Harness Design		
Parameter	**Requirement**	**Remarks**
Wiring Type	AWG 20, 4P	

3.4.3.2. Power Interface Circuits

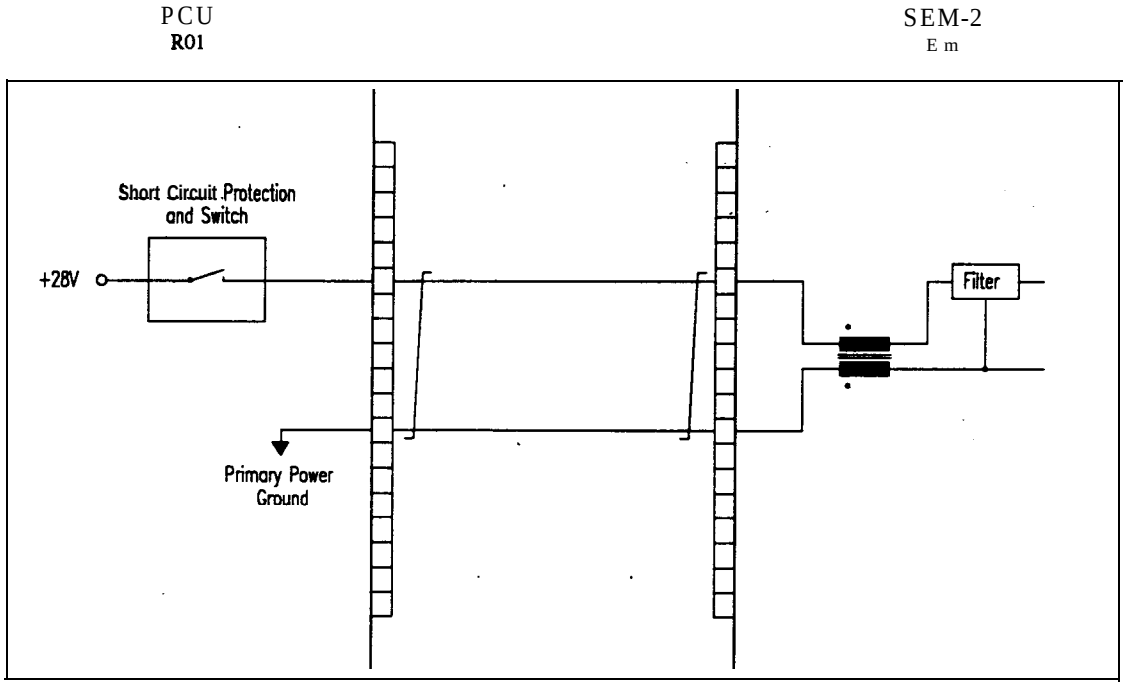

Fig. 3.4.3.2-l : +28 V Main Power Bus Interface Circuit

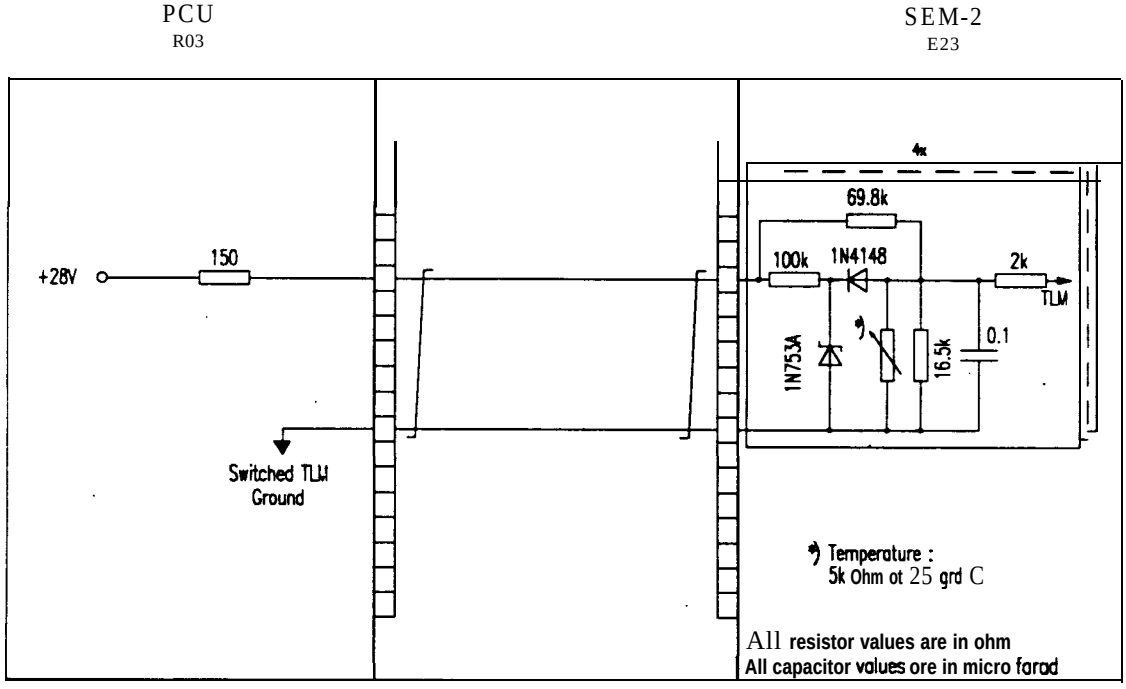

Fig. 3.4.3.2-2 : +28 V Switched TLM Bus Interface Circuit

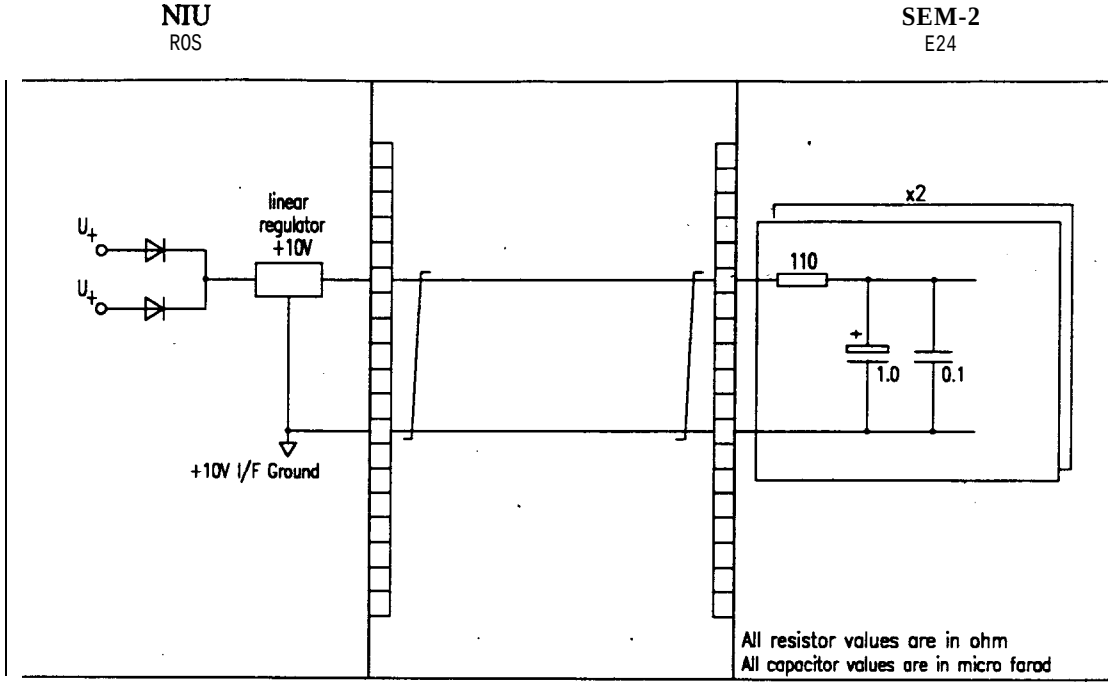

Fig. 3.4.3.2-3 : +10 V Interface Bus Interface Circuit

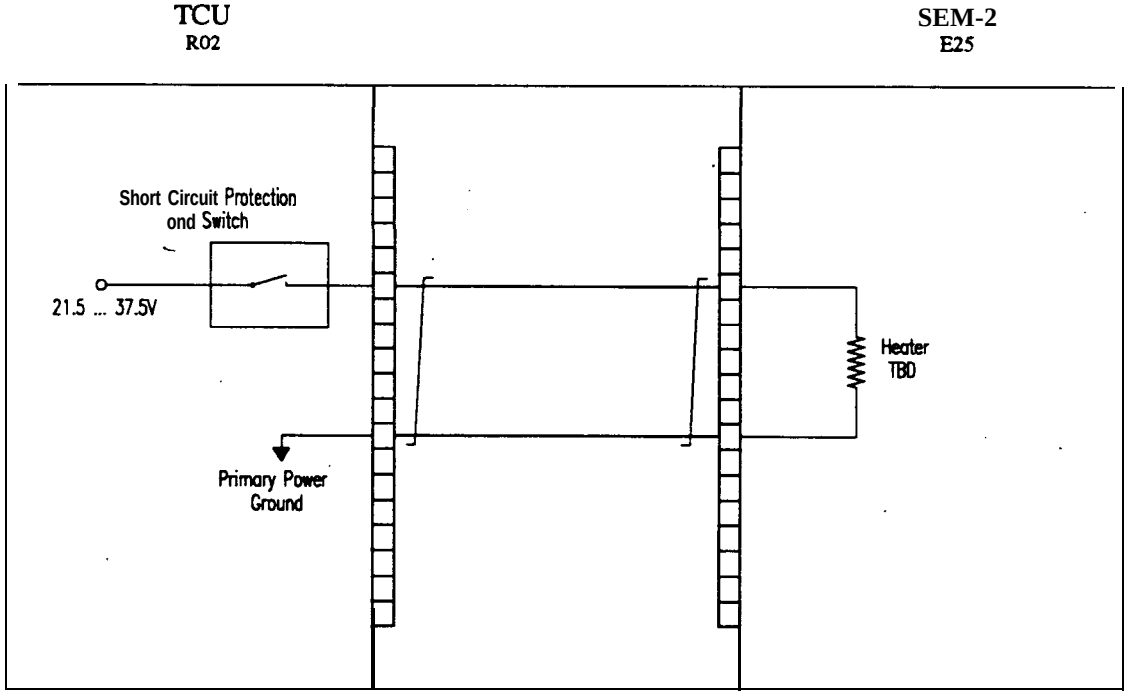

Fig. 3.4.3.2-4 : Healer Power Bus (Operational) Interface Circuit

3.4.4. Power Connectors

Table 3.4.4-l identifies the power connector types at the SEM-2 boxes and Table 3.4.4-2 identifies the power connector types at the SEM-2 harness.

Connector	Connector-Type	Function
SEM JO1	DAM-15P	‘ Power
MPD JO5	DEM-9P	Heater MEPED
TED J04	DEM-9P	Heater TED

Table** 3.4.4-l : **Power Connector Types at SEM-2 Boxes

Connector	Connector-Type	Function
SEM P01	DAMA-15S-NMB	Power
MPDPO5	DEMA-9S-NMB	Heater MEPED
TED P04	DEMA-9S-NMB	Heater TED

Table** 3.4.4-2 **: Power Connector Types at SEM-2 Harness

3.4.5. Power Pin Allocation Lists

In these lists, the cross reference between connector pin, signal designation, Interface Data Sheet, target connector and target connector pin is defined and recorded as data base. Per connector one list is prepared.

Interface circuits of a unit are combined with the relevant interface circuit of the target connector.

Interface Data Sheets can be found in § 3.4.3.1.

The individual pin allocation lists are specified by 9 characters of a alpha numerical connector number. For the SEM-2 the first 3 characters are SEM for the SEM DPU, MPD for the SEM MEPED, and TED for the SEM TED. The 7th character is J for a box connector or P for a harness connector. The last two or three characters define the connector number.

Since these lists also specify wiring and shielding, they will form the basis for harness manufacturing.

The power connector pin allocations at instrument level are described in Tables 3.4.5/1 to /3. The power connector harness are described in Tables 3.4.5/4 to /6.

Connector : 1SEM260J01 Item : SEM-2 Function : Power SEM-2 **Backshell** : N/A
EMC-category : 1 **Conn.-Type :** DAM-15P

Pin	Signal Designation		Interface-Code Circ	Signal	Pals.	Grouping Ch. ID	Shd	Cable	Twist	Comment	New
10	+28V MainPwr Bus SEM	.SUP1	E05	APB-	- D	APO1					-
11	+28V MainPwr Bus SEM	.RTN1	E05	APB-	- 7	AP01					
09	+28V MainPwr Bus SEM	.SUP2	E05	APB-	- D	APO1					
12	+28V MainPwr Bus SEM	.RTN2	E05	APB-	-7.	AP01					
01	+28V SW TLM Bus SEM	SUP	E23	BPB-	- D	BP01					
02	+28V SW TLM Bus SEM	.RTN	E23	BPB-	- 7	BP01					
14	+10V I/F Bus SEM	.SUP	E24	DPB-	- D	DP20					
15	+10V I/F Bus SEM	.RTN	E24	DPB-	- 7	DP20					
03	NC	.-									
04	NC	.-									
05	NC	.-									
06	NC	.-									
07	NC	.-									
13	Signal Ground SEM01	.GND		GND	-	GN20					
08	Chassis Ground SEM01	.-									

Table 3.4.5/1 : Pin *Allocation List of Connector J01 (SEM-2 DPU)*

connector : 1MPD225J05 Item : SEM-MPD Function : Heater **MEPED Backshell** : N / A
EMC-category : 1 **Conn.-Type** : DEM-09P

Pin	Signal Designation		Interface-Code Circ	Signal	Pos.	Grouping Ch. ID	Shd	Cable	Twist	Comment	New
02	+28V Heater Pwr MPD	SUP	E25		- D					Pin 2 is shorted	
03	+28V Heater Pwr MPD	SUP	E25	JPB-	- D	JPB0				to Pin 3 and 4	
04	+28V Heater Pwr MPD	.SUP	E25	JPB-	- D	JPBO				at the P-Conn.	
01	+28V Heater Pwr MPD	.RTN	E25		- 7					Pin 7 is shorted	
08	+28V Heater Pwr MPD	.RTN	E25	JPB-	-7	JPBO				to Pin 8 and 9	
09	+28V Heater Pwr MPD	.RTN	E25	JPB-	- 7	JPBO				at the P-Conn.	
01	Temp Sensor + MPD	.SIG									
06	Temp Sensor - MPD	.RTN									
05	NC	.-									

Table 3.4.5/2: Pin *Allocation List of Connector J05 (SEM-2 MEPED)* .

Connector : 1TED235J04 Item : SEM-TED Function : Heater TED Backshell : N/A
EMC-category : 1 **Conn.-Type : DEM-09P**

Pin	Signal Designation		Interface-Code Circ	Signal	Pos.	Grouping Ch. ID	Shd	Cable	Twist	Comment	New
02	+28V Heater Pwr TED	SUP	E25		- D					Pin 2 is shorted	
03	+28V Heater Pwr TED	SUP	E25	JPB-	- D	JPB1				to Pin 3 and 4	
04	+28V Heater Pwr TED	SUP	E25	JPB-	- D	JPB1				at the P-Conn.	
07	+28V Heater Pwr TED	.RTN	E25		- 7					Pin 7 is shorted	
08	+28V Heater Pwr TED	.RTN	E25	JPB-	-7	JPB1				to Pin 8 and 9	
09	+28V Heater Pwr TED	.RTN	E25	JPB-	- 7	JPB1				at the P-Conn.	
01	Temp Sensor + TED	.SIG									
06	Temp Sensor - TED	.RTN									
05	NC	.-									

Table 3.4.5/3 : Pin Allocation List of Connector JO4 (SEM-2 TED)

Connector : 1SEM260P01 **Item :** SFM-TED **Function :** Power SEM-2 **Conn.-Type :** DAMA-15S-NMB
EMC-Category : 1 **Location :** 260 **Backshell :** TBD

Pin	Signal Designation		Interlace-Code' Circ	Signal	Pos.	Ch. ID	Grouping Wiring	Shd	Cable	Twist	Comment	End-It.	Loc.	Connector Pin	New
10	+28V MainPwr Bus SEM	.SUP1	305	APB-	- D	AP01	T4-20					PCU	230	PCU230 Pxx	
11	+28V MainPwr Bus SEM	.RTN1	305	APB-	- 7	AP01	T4-20					PCU	230	PCU230 Pxx	
0!?	+28V MainPwr Bus SEM	.SUP2	305	APB-	- D	AP01	T4-20					PCU	230	PCU230 Pxx	
12	+28V MainPwr Bus SEM	.RTN2	105	APB-	- 7	AP01	T4-20					PCU	230	PCU230 Pxx	
01	+28V SW TLM Bus SEM	.SUP	323	BPB-	- D	BP01	TP-24					PCU	230	PCU230 Pxx	
02	+28V SW TLM Bus SEM	.RTN	323	BPB-	- 7	BP01	TP-24					PCU	230	PCU230 Pxx	
14	+10V I/F Bus SEM	.SUP	324	DPB-	- D	DP20	TP-24					NIU	240	NIU240 Pxx	
15	+10V I/F Bus SEM	.RTN	324	DPB-	- 7	DP20	TP-24					NIU	240	NIU240 Pxx	
03	NC	.-													
04	NC	.-													
05	NC	.-													
06	NC	.-													
07	NC	.-													
13	Signal Ground SEM01	.GND		GND-	-	GN20	SL-20					NIU	240	NIU240 Pxx	
08	Chassis Ground SEM01	.-													

*Table **3.4.5/4 :** Pin Allocation List of Connector **P01***
(For Information Only)

Connector : 1MPD225P05 Item : SEM-MPD Function : Heater MEPED Corm.-Type : DEMA-09S-NMB
EMC-Category : 1 Location : 225 Beckshell : TBD

Pin	Signal Designation		Interface-Code Circ	Signal	Pos.	Ch. ID	Grouping Wiring	Shd	Cable	Twist	Comment	End-It.	Loc.	Connector Pin	New
02	+28V Heater Pwr MPD	.SUP	E25	-	D						Pin 2 is shorted				
03	+28V Heater Pwr MPD	.SUP	E25	JPB- -	D	JPBO	T4-20				to Pin 3 and 4	TCU	230	TCU230 Pxx	
04	+28V Heater Pwr MPD	.SUP	E25	JPB- -	D	JPBO	T4-20				at the P-Conn.	TCU	230	TCU230 Pxx	
07	+28V Heater Pwr MPD	.RTN	E25	-	7						Pin 7 is shorted				
08	+28V Heater Pwr MPD	.RTN	E25	JPB- -	7	JPBO	T4-20				to Pin 8 and 9	TCU	230	TCU230 Pax	
09	+28V Heater Pwr MPD	.RTN	E25	JPB- -	7	JPBO	T4-20				at the P-Conn.	TCU	230	TCU230 Pxx	
01	Temp Sensor + MPD	.SIG													
06	Temp Sensor - MPD	.RTN													
05	NC	.-													

Table 3.4.5/5 : Pin Allocation List of Connector P05 (MEPED) (For Information Only)

Connector : 1TED235P04 Item : SEM-TED Function : Heater TED Corm.-Type : DEMA-09S-NMB
EMC-Category : 1 Location : 235 Backshell : TBD

Pin	Signal Designation		Interface-Code Circ	Signal	Pm.	Ch. ID	Grouping Wiring	Shd	Cable	Twist	Comment	End-It.	Loc.	Connector Pin	New
02	+28V Heater Pwr TED	.SUP	E25	-	D						Pin 2 is shorted				
03	+28V Heater Pwr TED	SUP	E25	JPB- -	D	JPB1	T4-20				to Pin 3 and 4	TCU	230	TCU230 Pax	
04	+28V Heater Pwr TED	SUP	E25	JPB- -	D	JPB1	T4-20				at the P-Conn.	TCU	230	TCU230 Pxx	
07	+28V Heater Pwr TED	.RTN	E25	-	7						Pin 7 is shorted				
08	+28V Heater Pwr TED	.RTN	E25	JPB- -	7	JPB1	T4-20				to Pin 8 and 9	TCU	230	TCU230 Pxx	
09	+28V Heater Pwr TED	.RTN	E25	JPB- -	7	JPB1	T4-20				at the P-Conn.	TCU	230	TCU230 Pxx	
01	Temp Sensor + TED	SIG													
06	Temp Sensor - TED	.RTN													
05	NC	.-													

Table 3.4.5/6 : Pin Allocation List of Connector PO4 (TED) (For Information Only)

3.5. SIGNAL ELECTRICAL INTERFACES

3.5.1. Overview

An overview on the SEM-2 signal interfaces with PLM and instrument internal interfaces is presented in Fig. 3.5-l.

Signal interfaces with the PLM units (NIU) are specified in § 3.5.2.
SEM-2in ¯,

ternal interfaces between DPU, MEPED and TED are specified in § 3.5.3.

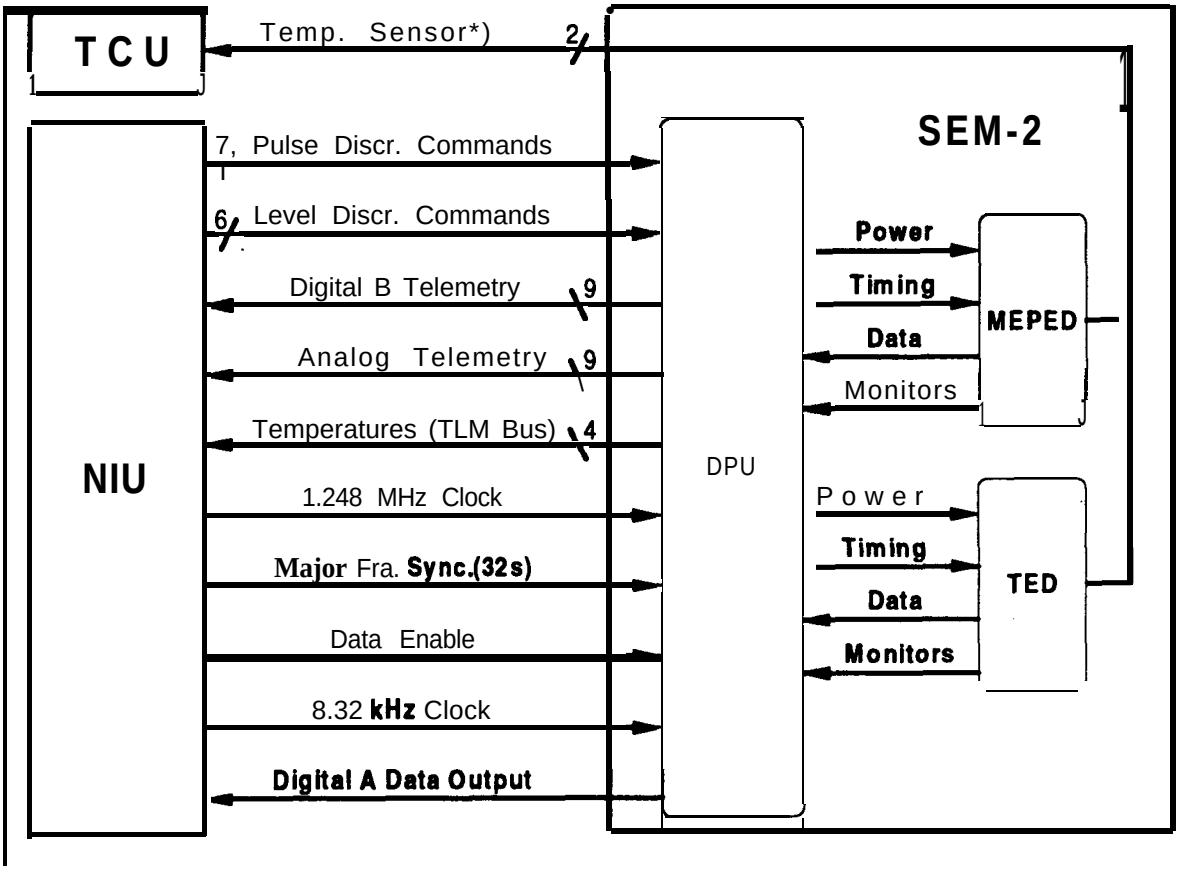

Fig. 3.5-l : SEM-2 Signal Interfaces with PLM and Instrument Internal Interfaces

3.5.2. Signal Interfaces with PLM Units

3.5.2.1. Signal Interface Requirements (Interfaces with PLM Units)

Table 3.5.2. l-l lists all signals of the SEM-2 signal interface with the PLM and gives references to the Interface Data Sheets in § 3.5.2.1.1 and the interface circuits in § 3.5.2.1.2.

Table 3.5.2.1-I : Signal to Data Sheets & Interface Circuit Assignments

Signal	Data Sheet Code	Interface Circuit	Remarks
Level Latch Command SEM-2 µP A Select SEM-2 µP B Select SEM-2 MEPED Bias On SEM-2 DPU / µP B On SEM-2 DPU / µP A On SEM-2 SEM Off SEM-2	CCP	Fig. 3.5.2.1.2-1	Pulse Discrete Commands
Level 1 Command Level 2 Command Level 3 Command Level 4 Command Level 5 Command Level 6 Command	CCL	Fig. 3.5.2.1.2-l	Level Discrete commands
µP System ID TLM SEM-2 TED e PHD MSB TLM SEM-2 TED e PHD LSB TLM SEM-2 TED p PHD MSB TLM SEM-2 TED p PHD LSB TLM SEM-2 TED IFC TLM SEM-2 MEPED IFC TLM SEM-2 µP A Watch D SEM-2 µP B Watch D SEM-2	TLD	Fig. 3.5.2.1.2-2	Digital B HK Telemetry
Microprocessor A +5V SEM-2 Microprocessor B +5V SEM-2 DPU +5V Monitor SEM-2 MEPED +5V Monitor SEM-2 TED +5V Monitor SEM-2 TED Sweep Voltage SEM-2 TED e CDEM High Voltage SEM-2 TED p CDEM High Voltage SEM-2 MEPED Omni Bias Voltage SEM-2	TLA	Fig. 3.5.2.1.2-3	Analog HK Telemetry
MEPED Elect. Temp. SEM-2 MEPED p Sensor Temp. SEM-2 TED Temperature SEM-2 DPU Temperature SEM-2	TLA	Fig. 3.5.2.1.2-4	Temperahues (Switched TLM Bus)
1.248 MHz Clock SEM-2	CLR	Fig. 3.5.2.1.2-5	liming see § 3.3
Major Frame Sync. (32s) SEM-2	SYU	Fig. 3.5.2.1.2-6	
Data Enable SEM-2	DEN	Fig. 3.5.2.1.2-7	
8.32 kHz Clock SEM-2	CLU	Fig. 3.5.2.1.2-7	Measurement Data
Digital A Data Output SEM-2	DOA	Fig. 3.5.2.1.2-7	
Temperature Sensor MEPED	METOP	Fig. 3.5.2.1.2-8	
Temperature Sensor TED	internal		

3.5.2.1.1. **Signal** Interface Data Sheets (Interfaces With PLM Units)

On the following pages, the electrical **characteristics** of signal electrical interfaces are defined with one Data Sheet per signal. In § 3.5.2.1 **'Signal Electrical Interface Requirements" and** § 3.5.2.3 'Signal Pin Allocation Lists' is referenced to these Data Sheets.

The performances specified in the Data Sheets are maintained during the mission lifetime and under nominal load and temperature range conditions. Source **specifications** have to be **measured** at the connector of the source and load **specifications** have to be **measured** at the connector of the load **unless** specified otherwise.

The Fault Voltage Protection is the maximum extemally induced voltage that the **specified** input or output can withstand without damage. The Fault Voltage Emissions is the maximum **internally** generated voltage that the specified input or output can create under worst case fault conditions.

Signal Nomenclature	**Pulse Discrete Commands (Short)**	
Code	**CCP**	
EMC Class	Signal	
Source Circuit Specification		
Parameter	**Requirement**	**Remarks**
'1' - Level (= True = 0 VDC)	-0.2 ..I +0.2 v	line to 10 V I/F ground
U-Level (= False = 10 VDC ; V_{OH})	+9.3 . . . +10.7 v	line to 10 V I/F ground
Rise Time 10% to 90%	< 12 µs	cable length < 5 m
Fall Time 90% to 10%	< 12 µs	cable length < 5 m
Pulse Duration	55 . . . 65 ms	'1' - Level
Output Impedance	< 1.5 kΩ	R (CMOS output) + 200 Ω
Source Current	> 1 mA	@ V_{OH} = 9.5 V
Fault Voltage Emissions	0 V . . . V_{DD}	R_S > 100 Ω
Fault Voltage Protection	-0.5 v . . . V_{DD} + 0.5 v	V_{DD} see Nate
Load Circuit Specification		
Parameter	**Requirement**	**Remarks**
'1' - Level	-0.5 . . . +2 v	line to 10 V I/F ground
'0' - Level	+8.0 . . . +10.8 V	line to 10 V I/F ground
Sink Current	< 1 mA	
input Impedance	> 15 kΩ	
Fault Voltage Emissions	0 V . . . V_{DD}	R_S > 2 kΩ
Fault Voltage Protection	-0.5 V . . . V_{DD} + 0.5 V	V_{DD} see Note
Harness **Design**		
Parameter	**Requirement**	Remarks
Wiring Type	AWG 24, single line	return via + 10 V I/F ground

Note : V_{DD} is the common supply voltage for the source and the load circuit.
Definition of V_{DD} : see Data Sheet '+ 10 V Interface Bus - DPB' in § 3.4.3.1.

Signal Nomenclature	Level Discrete commands	
Code	CCL	
EMC Class	Signal	
Source Circuit Specification		
Parameter	**Requirement**	**'Remarks**
'1' - Level (= True = 0 VDC)	-0.2 ..I +0.2 v	line to 10 V I/F ground
'0'-Level (= False = 10 VDC ; V_{OH})	+9.3 . . . +10.7 v	line to 10 V I/F ground
Rise Time 10% to 90%	< 12 µs	cable length < 5 m
Fall Time 90% to 10%	< 12 µs	cable length < 5 m
Output Impedance	< 1.5 kΩ	R (CMOS output) + 200 Ω
Source Current	> 1 mA	@ V_{OH} = 9.5 V
Fault Voltage Emissions	0 v . . . V_{DD}	R_S > 100 Ω
Fault Voltage Protection	-0.5 v . . . V_{DD} + 0.5 v	V_{DD} defined in Data Sheet CCP
Load **Circuit Specification**		
Parameter	**Requirement**	**Remarks**
'1' - Level	-0.5 . . . +2 v	line to 10 V I/F ground
'0' - Level	+8.0 . . . +10.8 V	line to 10 V I/F ground
Sink Current	< 1 mA	
Input Impedance	> 15 kΩ	
Fault Voltage Emissions	0 V... V_{DD}	R_S > 2 kΩ
Fault Voltage Protection	-0.5 v . . . V_{DD} + 0.5 V	V_{DD} defined in Data Sheet CCP
Harness Design		
Parameter	**Requirement**	**Remarks**
Wiring Type	AWG 24, single line	return via +10 V I/F ground

Signal Nomenclature	**Digital B Telemetry**	
Code	TLD	
EMC Class	Signal	
Source Circuit Specification		
Parameter	**Requirement**	**Remarks**
'1' -Level	-0.1 . . . +0.5 v	Ground reference
'0' - Level	+3.5 . . . +5.7 v	See interface circuit
Spectral Frequency **Range**	0 . . . 200 Hz	**for f > 200 Hz filter required ;** sampling rate see under Load
Output **Impedance**	2 kΩ . .. 15 kΩ	
Source Current	> 60 µA	
Fault Voltage Emissions	-15.... +15 v	R_S > 0.2 kΩ
Fault Voltage Protection	-15 . . . +15 v	R_S > 0.2 kΩ
Load Circuit Specification		
Parameter	**Requirement**	Remarks
1' - Level	-0.2 . . . +0.8 v	**line to 10 V I/F ground**
0' - Level	+3.0 . . . +5.7 v	**line to 10 V I/F ground**
Sink Current	< 60 µA	
Sampling Rate	0.125 . . . 16 s	
Fault Voltage Emissions	-15 . . . +15 v	R_S > 0.2 kΩ
Fault Voltage Protection	-15 . . . +15 v	
Input Impedance	>100 kΩ	
Harness Design		
Parameter	**Requirement**	**Remarks**
Wiring Type	AWG 24, single line	return via 10 V **I/F** Ground

Signal Nomenclature	Analog HK Telemetry	
Code	TLA	
EMC Class	Signal	
Source Circuit Specification		
Parameter	**Requirement**	**Remarks**
Voltage Range	0 . . . 5.12 v	load > 2 MΩ
Spectral Frequency Range	0 . . . 200 Hz	for f > 200 Hz filter required ; sampling rate see under Load
Output Impedance	2 kΩ . . . 15 kΩ	
Source Current	> 3 µA	
Fault Voltage Emissions	-15 . . . +15 v	R_S > 2 kΩ
Fault Voltage Protection	-15 . . . +15 v	R_S > 2 kΩ
Load Circuit Specification		
Parameter	**Requirement**	**Remarks**
Input Voltage Range	0 . . . 5.12 V	Line to return
Sampling Rate	0.125 . . . 16 s	
Conversion Resolution	8 bit	20 mV/LSB
Measurement Accuracy	20 mV	
Sink Current	< 3 µA	
Fault Voltage Emissions	-15 . . . +15 v	R_S > 2 kΩ
Fault Voltage Protection	-15 . . . +15 v	
input Impedance	> 2 MΩ	
Harness Design		
Parameter	**Requirement**	**Remarks**
Wiring Type	AWG 24, Single Line	Return via Signal Ground or Sw. TLM Ground (see Interface Circuits)

Signal Nomenclature	1.248 MHz Clock	
Code	CLR	
EMC Class	RF	
Source Circuit Specification		
Parameter	**Requirement**	**Remarks**
Low Level	-0.2 ... +0.2 V	line to 10 V I/F ground
High Level (V_{OH})	+9.3 ... +10.7 V	line to 10 V I/F ground
Frequency	1.248 MHz ± 1.10^{-6}	initial setting
Stability	< 5.10^{-9} / sec.	
Frequency Drift per Week	5.10^{-6}	over temperature range
Frequency Drift per Year	1.10^{-6}	at constant temperature
Rise Time 10% to 90%	< 60 ns	cable length c 5 m
Clock Symmetry	> 82 %	see figure below
Output Impedance	< 120 Ω	CMOS buffer output
Source Current	> 2.8 mA	@ V_{OH} = 9.5 v
Fault Voltage Emissions	0 V . . . V_{DD}	R_S > 100 Ω
Fault Voltage Protection	-0.5 V . . . V_{DD} + 0.5 V	V_{DD} defined in Data Sheet CCP
Load Circuit Specifkation		
Parameter	**Requirement**	**Remarks**
Low Level	-0.5 ... +2.0 V	line to 10 V I/F ground
High Level (V_{IH})	+8.0 ... +10.8 V	line to 10 V I/F ground
Sink Current	< 1 mA	
Input Impedance	> 90 kΩ	
Fault Voltage Emissions	0 V ... V_{DD}	R_S > 2 kΩ
Fault Voltage Protection	-0.5 V ... V_{DD} + 0.5 V	V_{DD} defined in Data Sheet CCP
Harness Design		
Parameter	**Requirement**	**Remarks**
Wiring Type	Double shielded cable	See Figure 3.5.2.1.2-5

Symmetry :
A / B x 100 % if B > A
B/Ax 100% if A > B

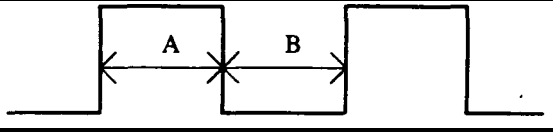

Signal Nomenclature	Sync. 32 s	
Code	SYU	
EMC Class	Signal	
Source Circuit Specification		
Parameter	Requirement	Remarks
'1' - Level	-0.2 . . . +0.2 v	line to 10 V I/F ground
'0' - Level (V_{OH})	+9.3 . . . +10.7 v	line to 10 V ground
Repetition Rate	32s	
Stability	tolerances : see Table 3.3.2-l	
Pulse Width	240.4 ± 1.7 µs	at '1' - Level
Rise Time 10% to 90%	< 2 µs	cable length < 5 m
Fall Time 90% to 10%	< 2 µs	cable length < 5 m
Output Impedance	< 1.5 kΩ	R (CMOS output) + 200 Ω
Source Current	> 1 mA	@ V_{OH} = 9.5 v
Fault Voltage Emissions	0 v . . . V_{DD}	R_S > 100 Ω
Fault Voltage Protection	-0.5 v . . . V_{DD} + 0.5 v	V_{DD} defined in Data Sheet CCP
Load Circuit Specification'		
Parameter	Requirement	Remarks
1' - Level	-0.5 . . . +2 v	line to 10 V I/F ground
'0' - Level	+8.0 . . . +10.8 V	line to 10 V I/F ground
Sink Current	< 1 mA	
Input Impedance	> 15 kΩ	
Fault Voltage Emissions	0 V . . . V_{DD}	R_S > 2 kΩ
Fault Voltage Protection	-0.5 V . . . V_{DD} + 0.5 V	V_{DD} defined in Data Sheet CCP
Harness Design		
Parameter	Requirement	Remarks
Wiring Type	AWG 24, single line	return via + 10 V I/F ground

Signal Nomenclature	Data Enable	
Code	DEN	
EMC Class	Signal	
Source Circuit Specification		
Parameter	**Requirement**	**Remarks**
'1' - Level	-0.2 . . . +0.2 v	line to 10 V I/F ground
'0' - Level (V_{OH})	+9.3 . . . +10.7 v	line to 10 V I/F ground
Number of Samples	2 per 100 ms	
Stability	Derived from 8.32 kHz clock	See Data SheetCLU/CLR
Pulse Width	(39/5) x (118.32 kHz clock)	at '1' - Level 1
Rise Time 10% to 90%	< 2 µs	cable length < 5 m
Fall Time 90% to 10%	< 2 µs	cable length < 5 m
Output Impedance	< 1.5 kΩ	R (CMOS output) + 200 Ω
Source Current	>1mA	@ V_{OH} = 9.5 v
Fault Voltage Emissions	0 V... V_{DD}	R_S > 100 Ω
Fault Voltage Protection	-0.5 v . . . V_{DD} + 0.5 v	V_{DD} defined in Data Sheet CCP
Load Circuit Specification		
Parameter	**Requirement**	Remarks
'1' - Level	-0.5 . . . +2 v	line to 10 V I/F ground
'O-Level	+8.0 . . . +10.8 V	line to 10 V I/F ground
Sink Current	< 1 mA	
Input Impedance	> 90 kΩ	
Fault Voltage Emissions	0 v . . . V_{DD}	R_S > 2 kΩ
Fault Voltage Protection	-0.5 v . . . V_{DD} + 0.5 v	V_{DD} defined in Data Sheet CCP
Harness Design		
Parameter	**Requirement**	**Remarks**
Wiring Type	AWG 24, single line	return via 10 V I/F ground

Signal Nomenclature	**8.32 kHz Clock**	
Code	CLU	
EMC **Class**	Signal	
Source Circuit Specification		
Parameter	**Requirement**	**Remarks**
'1' -Level	-0.2 . . . +0.2 v	line to 10 V I/F ground
'0' - Level (V_{OH})	+9.3 . . . +10.7 v	line to 10 V I/F ground
Repetition Rate	8.32 kpps	tolerance depends on 1.248 MHz clock
Stability	Derived from 1.248 MHz clock	See Data Sheet CLR
Pulse Width	24 ± 1.7 µs	at '1' -Level
Rise Time 10% to 90%	< 2 µs	cable length < 5 m
Fall Time 90% to 10%	< 2 µs	cable length < 5 m
Output Impedance	< 1.5 kΩ	R (CMOS output) + 200 Ω
Source Current	> l m A	@ V_{OH} = 9.5 v
Fault Voltage **Emissions**	0 V . . . V_{DD}	R_S > 100 Ω
Fault Voltage **Protection**	-0.5 V . . . V_{DD} + 0.5 v	V_{DD} defined in Data Sheet CCP
Load Circuit Specification		
Parameter	**Requirement**	**Remarks**
'1' - Level	-0.5 . . . +2 v	line to 10 V I/F ground
'0' - Level	+8.0 . . . +10.8 V	line to 10 V I/F ground
Sink Current	< 1 mA	
Input Impedance	> 90 kΩ	
Fault Voltage Emissions	0 V . . . V_{DD}	R_S > 2 kΩ
Fault Voltage Protection	-0.5 V . . . V_{DD} + 0.5 V	V_{DD} defined in Data Sheet CCP
Harness Design		
Parameter	Requirement	Remarks
Wiring Type	AWG 24, single line	line to 10 V I/F ground

Signal Nomenclature	Data Output	
Code	DOA	
EMC Class	Signal	
Source Circuit Specification:		
Parameter	**Requirement**	**Remarks**
'1' - Level:	-0.2 ... +0.2 V	line to 10 V I/F ground
'0' - Level (V_{OH})	+9.3 ... +10.7 V	line to 10 V I/F ground
Data Word Rate (Burst)	Two 8-bit words every 100 ms	
Rise Time 10% to 90%	< 2 µs	cable length < 5 m
Fall Time 90% to 10%	< 2 µs	cable length < 5 m
Output Impedance	< 1.5 kΩ	R (CMOS output) + 200 Ω
Source Current	> 1 mA	@ V_{OH} = 9.5 V
Fault Voltage Emissions	0 V ... V_{DD}	R_S > 100 Ω
Fault Voltage Protection	-0.5 V ... V_{DD} + 0.5 V	V_{DD} defined in Data Sheet CCP
Load Circuit Specification		
Parameter	**Requirement**	**Remarks**
'1' - Level	-0.5 ... +2 V	line to 10 V I/F ground
'0' - Level	+8.0 ... +10.8 V	line to 10 V I/F ground
Sink Current	< 1 mA	
Input Impedance	> 90 kΩ	
Fault Voltage Emissions	0 V ... V_{DD}	R_S > 2 kΩ
Fault Voltage Protection	-0.5 V ... V_{DD} + 0.5 V	V_{DD} defined in Data Sheet CCP
Harness Design		
Parameter	**Requirement**	**Remarks**
Wiring Type	AWG 24, single line	return via 10 V I/F ground

3.5.2.1.2. **Signal** Interface Circuits (Interfaces With PLM Units)

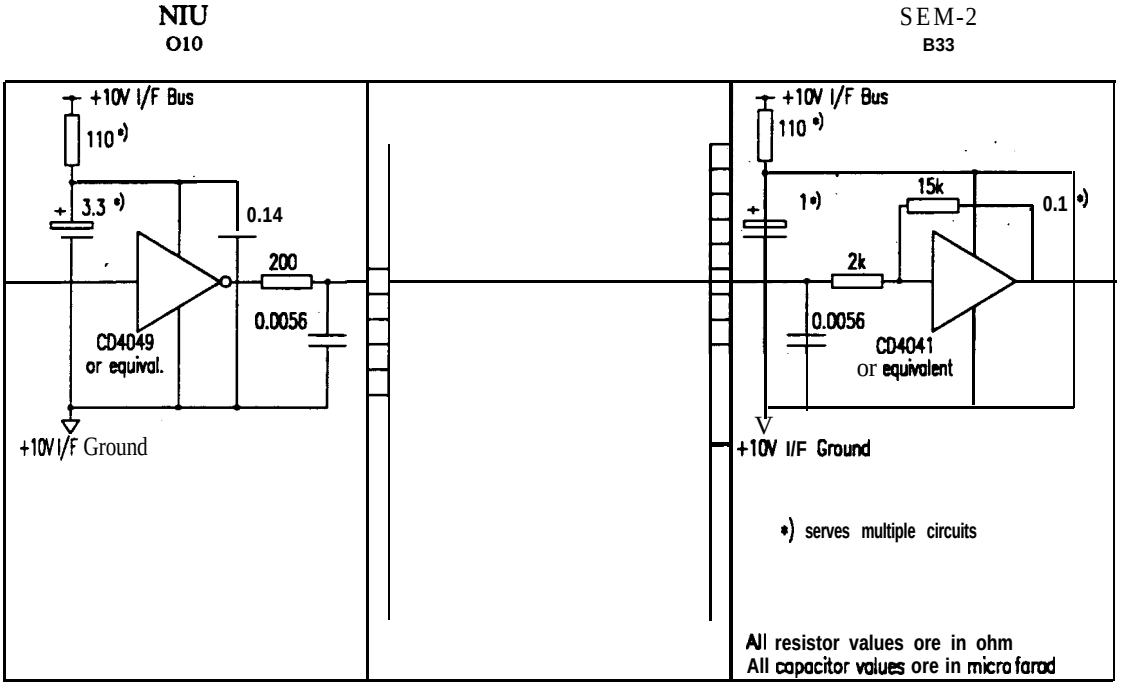

Fig. 3.5.2.1.2-I : SEM-2 Pulse and Level Discrete Command Interface Circuit

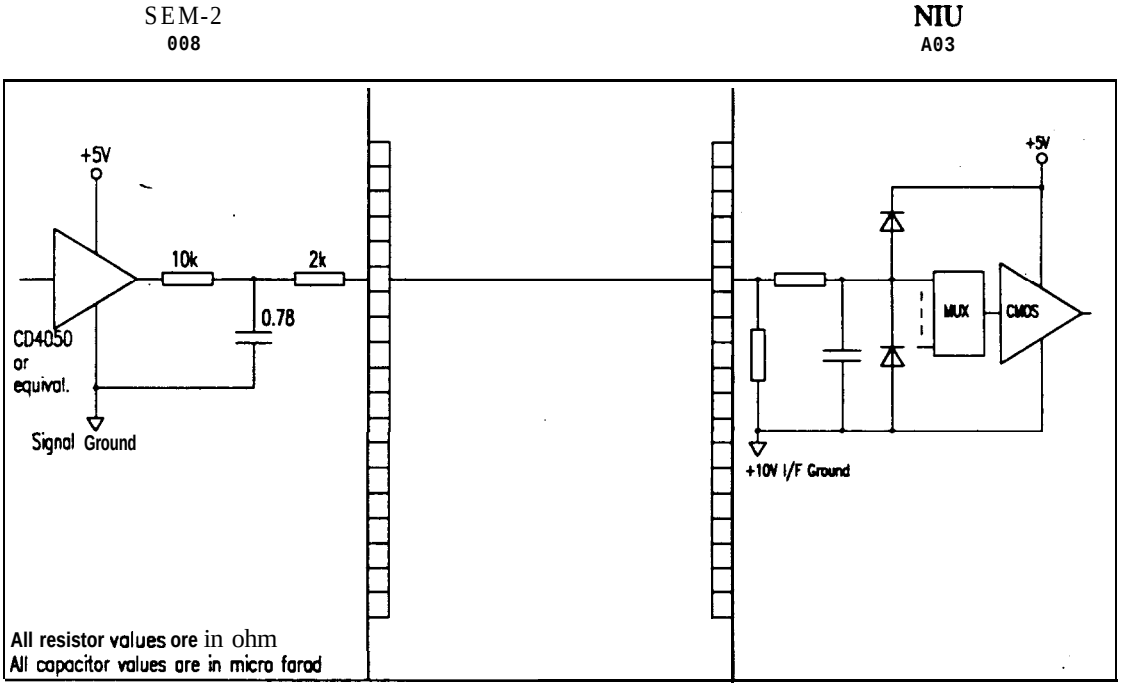

Fig. 3.5.2.1.2-2 : Typical SEM-2 Digital B Teiemeby Interface Circuit

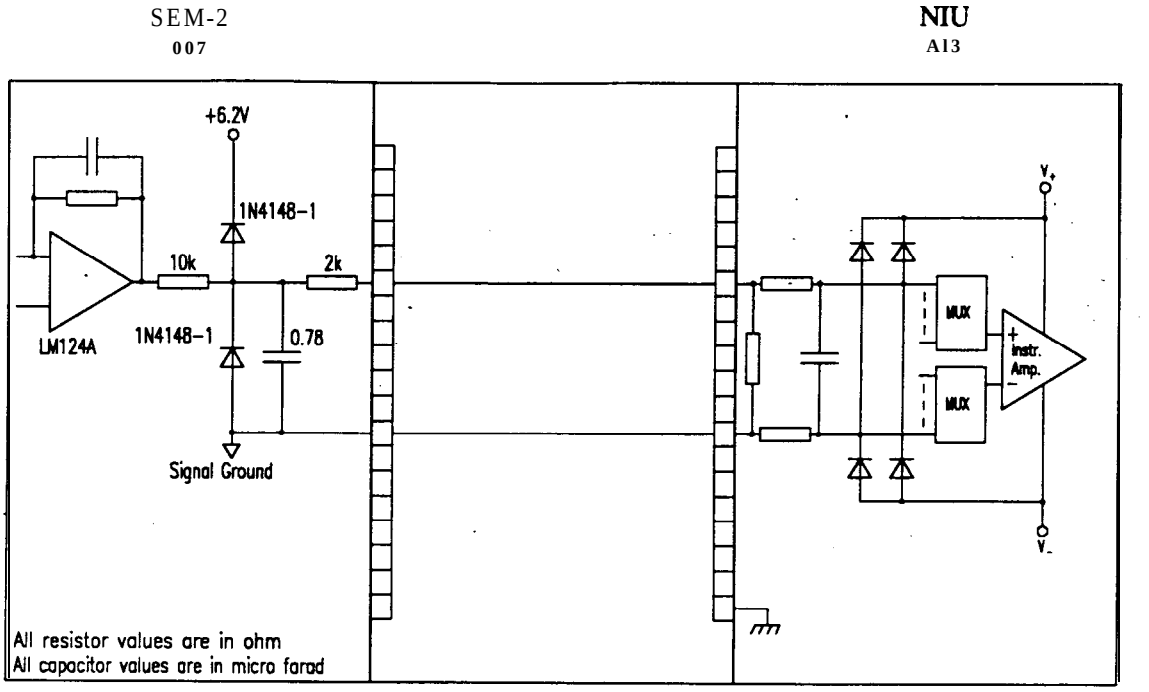

Only one Signal Ground line is provided from SEM-2 for all analog TLM interfaces

Fig. 3.5.2.1.2-3: Typical SEM-2 Analog Telemetry Interface Circuit

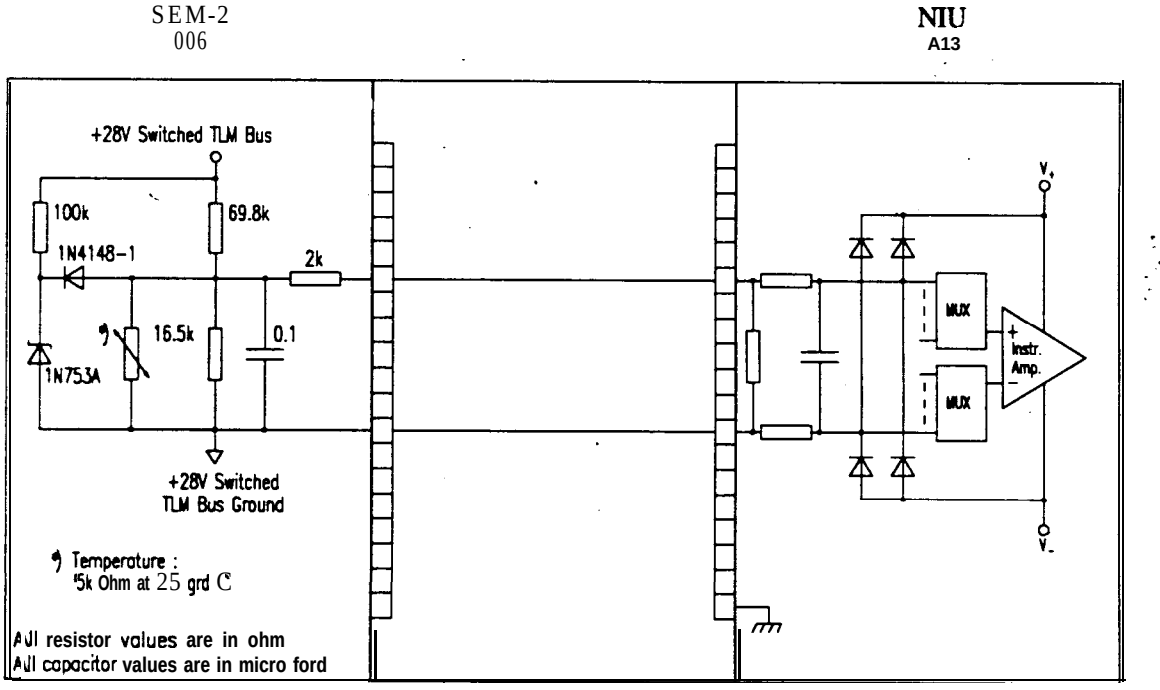

Only one Switched TLM Ground line is provided from SEM-2 for all temperature (switched TLM bus) interfaces

Fig. 3.5.2.1.2-4 : SEM-2 Temperature Telemetry (Switched TLM Bus) Interface Circuit

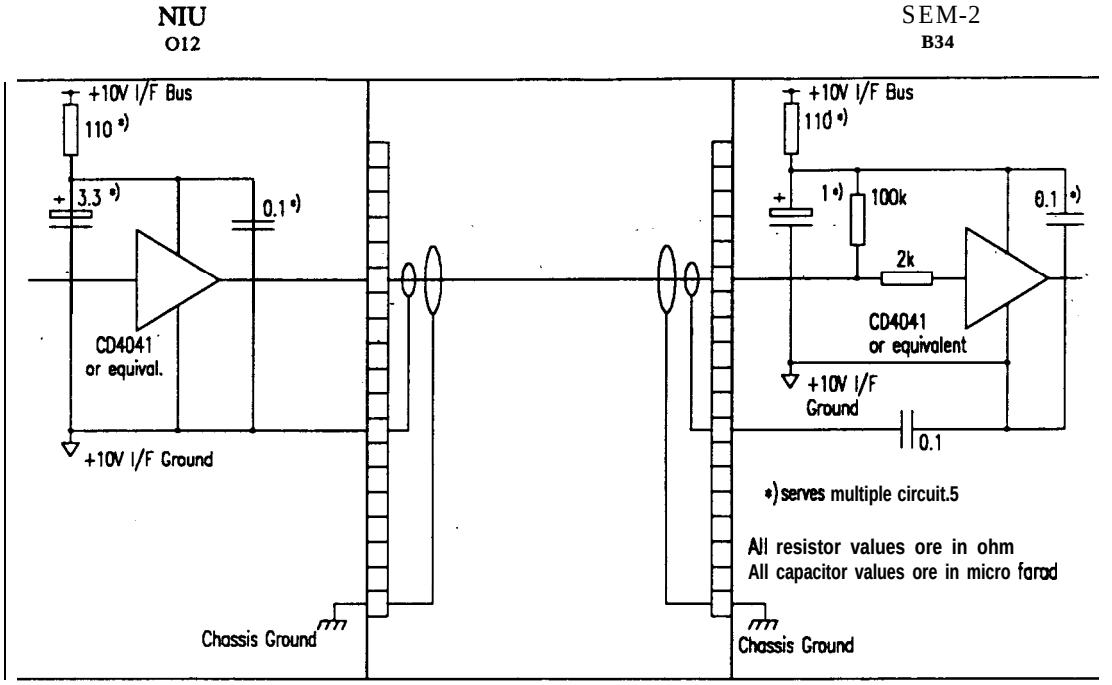

Fig. 3.5.2.1.2-S : 1.248 MHz Clock Interface Circuit

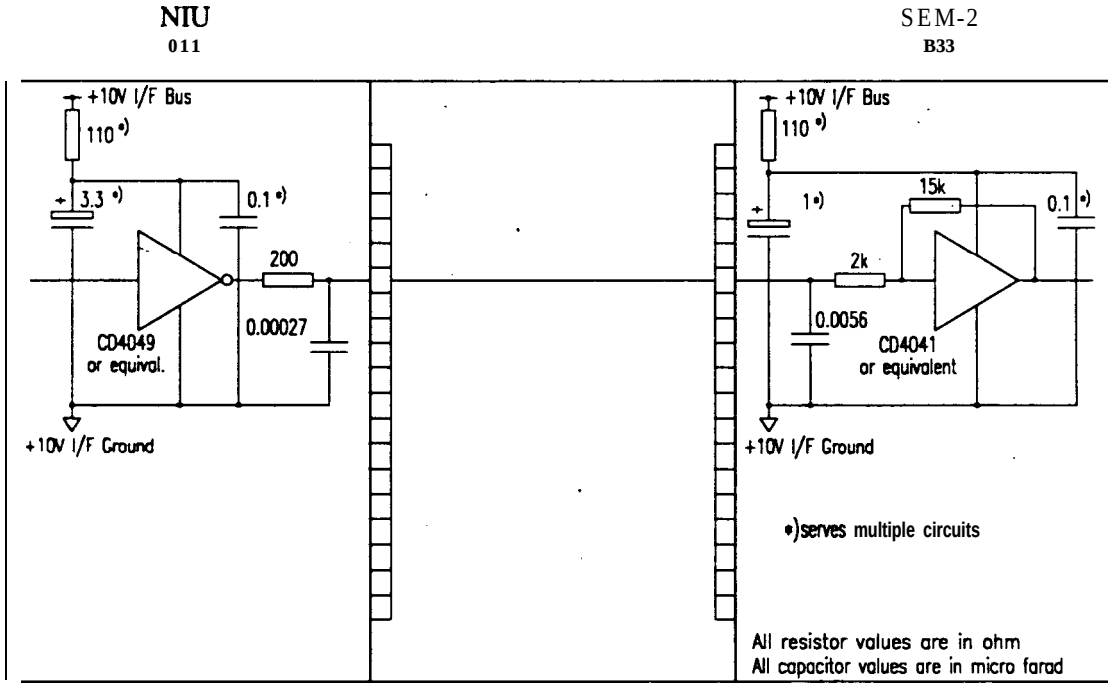

Fig. 3.5.2.1.2-6 : SEM-2 Major Frame Sync. Interface Circuit

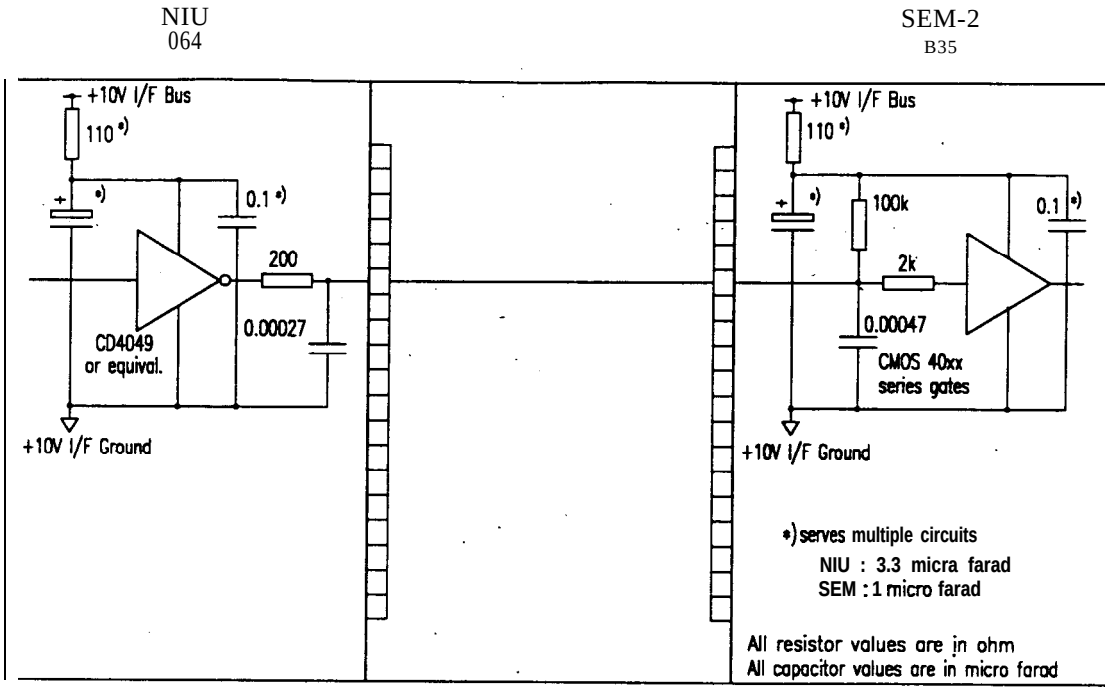

Fig. 3.5.2.1.2- 7 : Fast CMOS - CMOS Interface Circuit

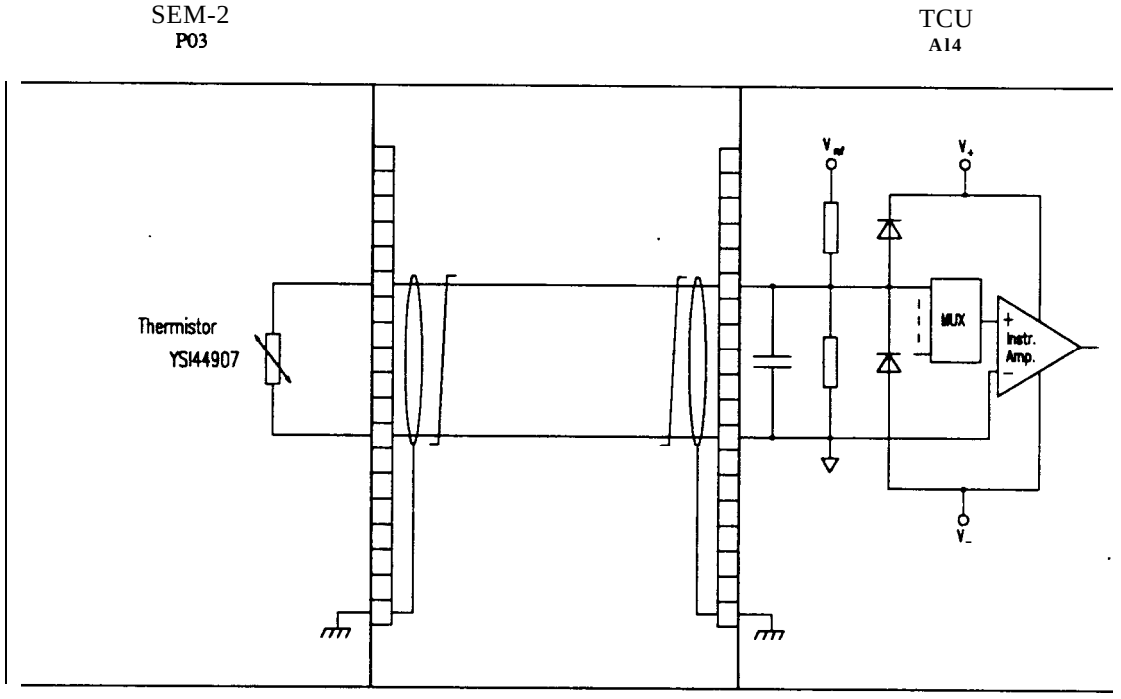

Fig. 3.5.2.1.2- 8 : Temperature Sensor Interface Circuit

3.5.2.2. *Signal* Connectors (Interfaces With PLM Units)

Table 3.5.2.2-l identifies the signal connector types at the SEM-2 boxes and Table 3.5.2.2-2 identifies the signal connector types at the SEM-2 harness.

Connector	Connector-Type	Function
JO2	DBM-17W2P	liming and Digital A
JO3	DBM- 17W2S	Digital B TLM
JO4	DBM-25S	Analog TLM
JO5	DBM-25P	commands

Table 3.5.2.2-l : Signal Connector Types at SEM-2 DPU Boxes for Interfaces With PLM

Connector	Connector-Type	Function
P02	DBMA- 17W2S-NMB	Timing and Digital A
PO3	DBMA-17W2P-NMB	Digital B TLM
P04	DBMA-25P-NMB	Analog TLM
PO5	DBMA-25S-NMB	commands

Table** 3.5.2.2-2 : **Signal Connector Types at SEM-2 Harness for Interfaces With PLM

3.5.2.3. Signal Pin Allocation Lists (Interfaces With PLM Units)

In these lists, the cross reference between connector pin, signal designation, Interface Data Sheet, target connector and target connector pin is defined and recorded as data base. Per connector one list is prepared

Interface circuits of a unit are combined with the relevant Interface circuit of the target unit.

Interface Data Sheets can be found in sect. 3.5.2.1 .1

The individual pin allocation lists are specified by 9 characters of a alpha numerical connector number. For the SEM-2 the first 3 characters are SEM. The 7th character is J for a box connector or P for a harness connector. The last two or three characters define the connector number.

Since these lists also specify wiring and shielding, they will form the basis for harness manufacturing.

The signal connector pin allocations at instrument level are described in Tables 3.5.2.3/l to /4. The signal connector harness are described in Tables 3.5.2.3/5 to /8.

Connector : 2SEM260J02 Item : SEM-2 **Function :** Timing I Dig. A **Backshell** : N/A
EMC-Category : 2 **Conn.-Type :** DBM17W2P

Pin	Signal Designation		Interface-Code Circ	Signal	Pos.	Grouping Ch. ID	Shd	Cable	Twist	Comment	New
03	8.32KHz Clock SEM	.SIG	11	au-	- D	U02					
04	Data Enable SEM	.SIG	11	DEN-	- D	E02					
05	Data Output SEM	SIG	11	DOA-	- D	O02					
		.SIG	13	SW-	- D	Y02					
		.SIG	12	CLR-	- D	U01					
		.ISHD	12	CLR-	- 7	U01				ee fig. 3.5.2.1.2.-5	
		.osHD	HD		- 0						

Table 3.5.2.3/1 : Pin Allocation List of Connector JO2

Connector : 2SEM260J03 **Item :** SEM-2 **Function :** Digital B TLM **Backshell :** N/A
EMC-category : 2 **Conn.-Type :** DBM17W2S

Pin	Signal Designation		Interface-Code Circ	Signal	Pa.	Grouping Ch. ID	Shd	Cable	Twist	Comment	New
03	MP AWatchdogStat SEM	SIG	008	TLD-	- D	11.38					
04	MP BWatchdogStat SEM	.SIG	008	TLD-	- D	n 3 9					
09	TED p PHB LSB SEM	.SIG	008	TLD-	- D	TL31					
10	TED p PHB MSB SEM	.SIG	008	TLD-	- D	n 3 2					
11	TED e PHB LSB SEM	.SIG	008	TLD-	- D	n 3 3					
12	TED e PHB MSB SEM	.SIG	008	TLD-	- D	TL34					
13	TED IFC Status SEM	.SIG	008	TLD-	- D	n 3 5					
14	MPD IFC Status SEM	SIG	008	TLD-	- D	TL36					
15	ActMicroproc ID SEM	SIG	008	TLD-	- D	TL30					
01	NC	.-									
02	NC	.-									
05	NC	.-									
06	NC	.-									
07	NC	.-									
A1	NC	.-									
A2	NC	.-									
08	Signal Ground sEMo3	.GND		GND-		GN21					

Table *3.5.2.3/2 : Pin Allocation List of Connector JO3*

Connector : 2SEM260J04 **Item :** SEM-2 **Function :** Analog TLM **Backshell :** N/A
EMC-Category 2 . **Conn.-Type :** DBM-25S

Pin	Signal Designation		Interface-Code Circ	Signa l	Pas.	Grouping Ch. ID	Shd	Cable	Twist	Comment	New
19	MP SystA+5VMonit SEM	.SIG	007	TLA-	- D	IL41					
20	MP SystB+5VMonit SEM	.SIG	007	TLA-	- D	IL42					
24	DPU+5V Monitor SEM	.SIG	007	TLA-	- D	IL43					
21	MPD +5V Monitor SEM	.SIG	007	TLA-	- D	IL44					
25	TED +5V Monitor SEM	.SIG	DO7	TLA-	- D	IL45					
23	TED SwpVoltMonit SEM	.SIG	007	TLA-	- D	IL46					
22	TED eCEM HiVoMo SEM	.SIG	007	TLA-	- D	IL47					
18	TED pCEM HiVoMo SEM	.SIG	007	TLA-	- D	IL48					
17	MPD OmniSeBiVoMo SEM	.SIG	007	TLA-	- D	IL49					
03	MPD ElectrTempMo SEM	.SIG	006	TLA-	- D	IL50					
04	MPD ProtTelTemMo SEM	SIG	006	TLA-	- D	IL51					
05	TED Temp Monitor SEM	.SIG	006	TLA-	- D	IL52					
11	DPU Temp Monitor SEM	.SIG	006	TLA-	- D	IL53					
01	NC	.-									
02	NC	.-									
06	NC	.-									
07	NC	.-									
08	NC	.-									
09	NC	.-									
12	SC	.-									
13	NC	.-									
14	NC	.-									
15	NC	.-									
10	+28V AnlgTelBus SEM	.RTN									
16	Signal Ground SEM04	.GND		GND		3N22					

Table 3.5.2.3/3 : Pin Allocation List of Connector JO4

Connector : 2SEM260J05 **Item :** SEM-2 **Function :** Commands **Backshell :** N/A
EMC-Category : 2 **Conn.-Type :** D B M - 2 5 P

Pin	Signal Designation		Interface-Code Circ	Signal	Pa.	Grouping Ch. ID	Shd	Cable	Twist	Comment	New
13	Level Cmd Latch SEM	SIG	B10	CCP-	- D	CC30					
24	MP A Select SEM	.SIG	B10	CCP-	- D	CC31					
23	MP B Select SEM	.SIG	B10	CCP-	- D	CC32					
22	MPD Bias Go SEM	.SIG	B10	CCP-	- D	CC33					
21	DPU/MP B Go SEM	.SIG	B10	CCP-	- D	CC34					
20	DPU/MP A On SEM	.SIG	B10	CCP-	- D	CC35					
19	Off SEM	.SIG	B10	CCP-	- D	CC36					
11	Level Cmd Line 1 SEM	.SIG	B13	CCL-	- D.	CC37					
09	Level Cmd Line 2 SEM	.SIG	B13	CCL-	- D	CC38					
10	Level Cmd Line 3 SEM	.SIG	B13	CCL-	- D	CC39					
07	Level Cmd Line 4 SEM	SIG	B13	CCL-	- D	CC40					
08	Level Cmd Line 5 SEM	.SIG	B13	CCL-	- D	x41					
06	Level Cmd Line 6 SEM	SIG	B13	CCL-	- D	X42					
01	NC	.-									
02	NC	.-									
03	NC	.-									
04	NC	.-									
05	NC	.-									
12	NC	.-									
14	NC	.-									
15	NC	.-									
16	NC	.-									
17	NC	.-									
18	NC	.-									
25	NC	.-									

Table 3.5.2.3/4 : Pin Allocation List of Connector JO5

Connector : 2SEM260P02 **Item :** SEM-2 **Function :** Timing and Digital A SEM-2 **Corm.-Type :** DBMA17W2S-NMB
EMC-Category : 2 **Location :** 2 6 0 **Backshell :** TBD

Pin	Signal Designation		Interface-Code Circ	Signal	Pos.	Ch. ID	Wiring	Grouping Shd	Cable	Twist	Comment	hd-It.	Loc.	Connector Ptn	New
03	8.32KHz Clock SEM	.SIG	311	CLU- -	D	CU02	SL-24					IIU	240	NIU240 Pxx	
04	Data Enable SEM	.SIG	311	DEN- -	D	DE02	SL-24					IIU	240	NIU240 Pxx	
05	Data Output SEM	.SIG	311	DOA- -	D	DO02	SL-24					IIU	240	NtU240 Pxx	
06	MajFrameSync 32s SEM	SIG	313	SYU- -	D	SY02	SL-24					IIU	240	NIU240 Pxx	
09	1.248MHz Clock SEM	SIG	312	CLR- -	D	CU01	TRt-24					IIU	240	NIU240 Pxx	
08	1.248MHz Clock SEM	.ISHD	312	CLR- -	7	CU01 .	TRI-24				see fig. 3.5.2.1.2.-5	IIU	240	NtU240 Pxx	
10	CABLE SHIELD	.OSHD	SHD		0										
07	NC				.										
11	NC														
12	NC														
13	NC														
14	NC														
15	NC														
A1	NC														
A2	NC														
02	Shield Ground SEM02														
01	chassis Ground SEM02														

*Table **3.5.2.3/5 : Pin Allocation** List of Connector PO2*

(For Information Only)

Connector : 2SEM260P03 Item : SEM-2 Function : Digital B TIM SEM-2 Conn.-Type : DBMA17W2P-NMB

EMC-Category : 2 Location : 260 Backshell : TBD

Pin	Signal Designation		Interface-Code Circ	Signal		Pos.	Ch. ID	Wiring	Grouping Sbd	Cable	Twist	Comment	End-It.	Loc.	Connector	Pin	New
03	MP AWatchdogStat SEM	.SIG	008	TLD	-	D	TL38	SL-24					NIU	240	NIU240	Pxx	
04	MP BWatchdogStat SEM	.SIG	008	TLD	-	D	TL39	SL-24					NIU	240	NIU240	Pxx	
09	TED p PHB LSB SEM	.SIG	008	TLD	-	D	TL31	SL-24					NIU	240	NIU240	Pxx	
10	TEDp PHB MSB SEM	.SIG	008	TLD	-	D	TL32	SL-24					NIU	240	NIU240	Pxx	
11	TEDe PHB LSB SEM	.SIG	708	TLD	-	D	TL33	SL-24					NIU	240	NHJ240	Pxx	
12	TEDe PHB MSB SEM	SIG	008	TLD	-	D	TL34	SL-24					NIU	240	NIU240	Pxx	
13	TED IFC Status SEM	.SIG	308	TLD-	-	D	rL35	SL-24					NIU	240	NIU240	Pxx	
14	MPD IFC Status SEM	.SIG	308	TLD-		D	TL36	SL-24					NIU	240	NIU240	Pxx	
15	ActMicroproc ID SEM	SIG	008	TLD-	-	D	TL30	SL-24					NIU	240	NIU240	Pxx	
01	NC	.-															
02	NC	.-															
05	NC	.-															
06	NC	.-															
07	NC	.-															
Al	NC	.-															
A2	NC	.-															
08	Signal Ground SEM03	.GND		GND-			GN21	SL-20					NIU	240	NIU240	Pxx	

Table 3.5.2.3/6 : Pin Allocation List of Connector PO3

(For Information Only)

Connector : 2SEM260P04 **Item :** SEM-2 **Function :** Analog TLMSEM-2 **Conn.-Type :** DBMA-25P-NMB
EMC-Category : 2 **Location :** 260 Backshell : TBD

Pin	Signal Designation		Interface-Code Circ	Signal	Pos.	Ch. ID	Wiring	Grouping Shd	Cable	Twist	Comment	End-It.	Loc.	Connector	Pin	New
19	MP SystA+5VMonit SEM	.SIG	007	TLA-	- D	TL41	SL-24					NIU	240	NIU240	Pxx	
20	MP SystB+5VMonit SEM	.SIG	007	TLA-	- D	TL42	SL-24					NIU	240	NIU240	Pxx	
24	DPU +5V Monitor SEM	SIG	007	TLA-	- D	TL43	SL-24					NIU	240	NIU240	Pxx	
21	MPD +5V Monitor SEM	.SIG	007	TLA-	- D	TL44	SL-24					NIU	240	NIU240	Pxx	
25	TED +5V Monitor SEM	.SIG	007	TLA-	- D	TL45	SL-24					NIU	240	NIU240	Pxx	
23	TED SwpVoltMonit SEM	.SIG	007	TLA-	- D	I-L46	SL-24					NIU	240	NIU240	Pxx	
22	TED eCEM HiVoMo SEM	.SIG	007	TLA-	- D	TL47	SL-24					NIU	240	NIU240	Pxx	
18	TED pCEM HiVoMo SEM	.SIG	007	TLA-	- D	TL48	SL-24					NIU	2 4 0	NIU240	Pxx	
17	MPD OmniSeBiVoMo SEM	.SIG	007	TLA-	- D	TL49	SL-24					NIU	240	NIU240	Pxx	
03	MPD ElectrTempMo SEM	.SIG	006	TLA-	- D	I-L50	SL-24					NIU	240	NIU240	Pxx	
04	MPD ProtTelTemMo SEM	.SIG	006	TLA-	- D	TL51	SL-24					NIU	240	NIU240	Pxx	
05	TED Temp Monitor SEM	.SIG	006	TLA-	- D	TL52	SL-24					NIU	240	NIU240	Pxx	
11	DPU Temp Monitor SEM	.SIG	006	TLA-	- D	TL53	SL-2.4					NIU	240	NIU240	PM	
01	NC	.-														
02	NC	.-														
06	NC	.-														
07	NC	.-														
08	NC	.-														
09	NC	.-														
12	NC	.-														
13	NC	.-														
14	NC	.-														
15	NC	.-														
10	+28V AnlgTelBus SEM	.RTN														
16	Signal Ground SEM04	.GND	GND-			GN22	SL-20					NIU	240	NIU240	Pxx	

Table 3.5.2.3/7 : Pin Allocation List of Connector PO4
(For Information Only)

Connector : 2SEM260P05 **Item :** SEM-2 **Function :** Commands SEM-2 **Corm.-Type :** DBMA-25S-NMB

EMC-Category : 2 **Location :** 260 **Backshell :** TBD

Pin	Signal Designation		Interface-Code Circ	Signal		Pos.	Grouping Ch.	ID Wiring	Shd	Cable	Twist	Comment	End-It.	Loc.	Connector	Pin	New
13	Level Cmd Latch SEM	.SIG	B10	CCP-	-	D	cc30	SL-24					NIU	240	NIU240 Pxx		
24	MP A Select SEM	.SIG	310	CCP-	-	D	CC31	SL-24					NIU	240	NIUMO Pxx		
23	MP B Select SEM	SIG	310	CCP-	-	D	x32	SL-24					NIU	240	NIU240 Pxx		
22	MPD Bias 00 SEM	.SIG	310	CCP-	-	D	cc33	SL-24					NIU	240	NIU240 Pxx		
21	DPU/MP B Oo SEM	.SIG	310	CCP-	-	D	cc34	SL-24					NIU	240	NIU240 Pxx		
20	DPU/MP A On SEM	.SIG	310	CCP-	-	D	cc35	SL-24					NIU	240	NIU240 Pxx		
19	Off SEM	.SIG	310	CCP-	-	D	CC36	SL-24					NIU	240	NIUZAO Pxx		
11	Level Cmd Lioe 1 SEM	SIG	313	CCL-	-	D	cc37	SL-24					NIU	240	NIU240 Pxx		
09	Level Cmd Line 2 SEM	.SIG	313	CCL-	-	D	CC38	SL-24					NIU	240	NIU240 Pxx		
10	Level Cmd Line 3 SEM	SIG	313	CCL-	-	D	cc39	SL-24					NIU	240	NIUMO Pax		
07	Level Cmd Line 4 SEM	.SIG	313	CCL-	-	D	cc40	SL-24					NIU	240	NIU240 Pxx		
08	Level Cmd Line 5 SEM	.SIG	313	CCL-	-	D	cc41	SL-24					NIU	240	NIU240 Pxx		
06	Level Cmd Line 6 SEM	SIG	313	CCL-	-	D	CC42	SL-24					NIU	240	NIU240 Pxx		
01	NC	.-															
02	NC	.-															
03	NC	.-															
04	NC	.-															
05	NC	.-															
I2	NC	.-															
14	NC	.-															
15	NC	.-															
16	NC	.-															
17	NC	.-															
18	NC	.-															
25	NC	.-															

Table 3.5.2.3/8 : Pin Allocation List of Connector P05

(For Information Only)

3.5.3. SEM-2 Internal Signal Interfaces

3.5.3.1. Signal Interface Requirements (SEM-2 Internal Interfaces)

There is no signal interface requirement between METOP and SEM-2 for these signals : inter-unit signal interface data sheets and interface circuits are not an interface issue between METOP and SEM-2. METOP is responsible to provide the SEM-2 inter-unit harness as dealt within § 3.7.

3.5.3.2. Signal Connectors (SEM-2 Internal Interfaces)

Table 3.5.3.2-l identifies the SEM-2 internal signal connector types at the DPU / MEPED boxes and Table 3.5.3.2-2 at the DPU / MEPED harness.

Table 3.5.3.2-3 identifies the SEM-2 intemal signal connector types at the DPU / TED boxes and Table 3.5.3.2-4 at the DPU /TED harness.

DPU		MEPED		Function
Connector	Connector-Type	Connector	Connector-Type	
J O 6	DCM-37S	J01	DCM-37P	MEPED Power / Timing
J07	DDM-SOP	J02	DDM-50S	MEPED Data / Monitors

Table 3.5.3.2-l : DPU / MEPED Signal Connector Types at Boxes

DPU		MEPED		Function
Connector	Connector-Type	Connector	Connector-Type	
P06	DCMA-37P-NMB	P01	DCMA-37S-NMB	MEPED Power / Timing
P07	DDMA-SOS-NMB	P02	DDMA-SOP-NMB	MEPED Data / Monitors

Table 3.5.3.2-2 : DPU / MEPED Harness Connector Types

DPU		TED		Function
Connector	Connector-Type	Connector	Connector-Type	
J08	DDM-SOS	J01	DDMA-SOP	TED Power / Timing
J09	DCM-37P	J02	DCMA-37S	TED Data / Monitors

Table 3.5.3.2-3: *DPU / TED Signal Connector Types at Boxes*

DPU		TED		Function
Connector	Connector-Type	Connector	Connector-Type	
P08	DDMA-SOP-NMB	P01	DDMA-SOS-NMB	TED Power / Timing
P09	DCMA-37S-NMB	P02	DCMA-37P-NMB	TED Dam / Monitors

Table 3.X3.2-4 : *DPU / TED Harness Connector Types*

33.33. Signal Pin Allocation Lii (SEM-2 Internal Interfaces)

In the-se lists. the cross reference between cotmector pin, signal designation, Interface Data Sheet, target connector and target connector pin is defined and recorded as data base. Per connector one list is prepared.

Interface circuits of a unit are combined with the relevant Interface circuit of the target unit.

Interface Data Sheets can be found in sect. 3.5.3.1.1

The individual pin allocation lists are specified by 9 characters of a alpha numerical connector number. For the SEM-2 the first 3 characters are DPU for the SEM DPU, MPD for the SEM MEPED, and TED for the SEM TED. The 7th character is J for a box connector or P for a harness connector. The last two or three characters define the connector number.

Since these lists also specify wiring and shielding, they will form the basis for harness manufacturing.

The signal connectors pin allocations are shown illustrated in Tables 3.5.3.3-l to -8 . The signal connector harness is shown in Tables 3.5.3.3-9 to -12.

Connector : 1 DPU260J06 Item : SEM-DPU Function : MEPED Power/Timing Backshell : N/A
EMC-Category : 1 Conn.-Type : DCM-37S

Pin	Signal Designation		Interface-Code Circ	Signal	Pos.	Ch. ID	Grouping Shd	Cable	Twist	Comment	New
31	+6.5V DC	.SUP		NALB	-	N200					
13	+6.5V DC	.RTN		NALB	-	N200					
33	+28V DC Switched	SUP		NALB	-	N201					
32	+28V DC switched	.RTN		'NALB	-	N201					
20	+28V AnlgTelBus	SUP		NALB	-	N202					
01	+28V AnlgTelBus	.RTN		NALB	-	N202					
29	+7.8V DC	SUP		NAL3	-	5203					
27	-7.8V DC	SUP		NAL3	-	N204					
10	+/-7.8V DC	.RTN		NAL3	-	N205					
15	IFC Start MEPED	.SIG		NAL-	-	N206					
14	IFC Abort	SIG		NAL-	-	N207					
35	8.32KHz IFC Clk MPD	.SIG		NAL-	-	5208					
37	1/2Hz 0°/90° Swt	.SIG		NAL-	-	N209					
03	ElectrIsolTemp	SIG		NAL-	-	N210					
04	ProtTeleIsolTemp	.SIG		NAL-	-	1211					
02	NC	.-									
05	NC	.-									
06	NC	.-									
07	NC	.-									
08	NC	.-									
09	NC	.-									
11	NC	.-									
12	NC	.-									
19	NC	.-									
21	NC	.-									
22	NC	.-									
23	NC	.-									
24	NC	.-									
25	NC	.-									
26	NC	.-									
28	NC	.-									
30	NC	.-									
34	NC	.-									
36	NC	.-									
16	Signal Ground DPU06A	.GND		GNDB	-	G200					
17	Signal Ground DPU06B	.GND		GNDB	-	G201					
18	Chassis Ground DPU06	.GND		GNDB	-	GN50					

Table 3.5.3.3-l : Pin Allocation List of Connector JO6 (DPU)

Connector : 2DPU260J07 Item : SEM-DPU Function : MEPED Data/Monitors **Backshell :** N/A
EMC-category : 2 **Conn.-Type :** DDM-SOP

Pin	Signal Designation		Interface-Code Circ	Signal	Pos.	Ch. ID	Grouping Shd	Cable	Twist	Comment	New
04	0P1/9P1 Pulses	.SIG		NALD	-	N230	1	1			
21	0P2/9P2 Pulses	SIG		NALD	-	N231	1	1			
37	0P3/9P3 Pulses	.SIG		NALD	-	N232	1	-1			
05	0P4/9P4 Pulses	SIG		NALD	-	N233	1	1			
22	0P5/9P5 Pulses	SIG		NALD	-	N234	1	1			
38	0P6/9P6 Pulses	.SIG		NALD	-	N235	1	1			
02	CABLE SHIELD	.GND	SHD		-		1				
17	0E1/9E1 Pulses	.SIG		NALF	-	N236	2	2			
33	0E2/9E2 Pulses	.SIG		NALF	-	N237	2	2			
50	0E3/9E3 Pukes	SIG		NALF	-	N238	2	2			
32	CABLESHIELD	.GND	SHD		-		2				
31	P6 Pulses	.SIG		NAL7	-	IU239	3	3			
48	P7 Pulses	.SIG		NAL7	-	N240	3	3			
49	P8 Pukes	.SIG		NAL7	-	IU241	3	3			
15	P9 Pulses	.SIG		NAL7	-	IU242	3	3			
16	CABLE SHIELD	.GND	SHD		-		3				
08	ElTelBiasVoltMon	.SIG		NAL-	-	IU243					
25	PrTelBiasVoltMon	.SIG		NAL-	-	IU244					
41	OmSenBiasVoltMon	.SIG		NAL-	-	N245					
06	IFC Ramp Monitor	.SIG		NAL-	-	IU246					
23	IFC RefVolMon	SIG		NAL-	-	IU247					
20	0° RefVoltMon	.SIG		NAL-	-	IU248					
36	90° RefVoltMon	SIG		NAL-	-	IU249					
14	PrTelTempMon	.SIG		NAL-	-	N250					
30	ElTelTempMon	SIG		NAL-	-	N251					
47	OmniTemp Monitor	SIG		NAL-	-	N252					
13	CircTemp Monitor	SIG		NAL-	-	IU253					
29	+6.2V Bus Monitor	.SIG		NAL-	-	N254					
46	-6.2V Bus Monitor	.SIG		NAL-	-	N255					
12	+5V Bus Monitor	.SIG		NAL-	-	IU256					
28	+7.8V BusMonitor	.SIG		NAL-	-	N257					
45	-7.8V BusMonitor	SIG		NAL-	-	IU258					
11	+6.5V BusMonitor	.SIG		NAL-	-	IU259					
39	IFC On/Off Stat	SIG		NAL-	-	N260					
07	IFC Phase Stat	.SIG		NAL-	-	N261					
01	NC	.-									
03	NC	.-									
NC		.-									
10	NC	.-									
18	NC	.-									
19	NC	.-									
24	NC	.-									
26	NC	.-									
27	NC	.-									
35	NC	.-									
40	NC	.-									
42	NC	.-									
43	NC	.-									
44	NC	.-									
34	Signal Ground DPU07	.GND		NAL1	-	IU262					

Table 3.5.3.3-2 : Pin Allocation List of Connector JO7 (DPU)

Connector : 1 DPU260J08 Item : SEM-DPU **Function :** TED Power/Timing Backshell : N/A
EMC-Category : 1 **Conn.-Type :** DDM-SOS

Pin	Signal Designation		Interface-Code Circ	Signal	Pos.	Grouping Ch. ID	Shd	Cable	Twist	Comment	New
36	-6V DC	.SUP		NAL3	- N265						
35	+8V DC	.SUP		NAL3	- N266						
18	-6V/+8V Return	.RTN		NAL3	- N267						
05	IFC Start TED	.SIG		NAL-	- N268						
07	8.32KHz IFC Clk TED	.SIG		NAL-	- N269						
04	Sweep Clock	.SIG		NAL-	- N270						
06	Sweep Reset	.SIG		NAL-	- N271						
19	e- PHD 2_1	.SIG		NAL-	- N273						
02	e- PHD 2_2	.SIG		NAL-	- N274						
20	p+ PHD 2_1	.SIG		NAL-	- N275						
03	p+ PHD 2_2	SIG		NAL-	- N276						
27	e- CEM HVPS 2_1	.SIG		NAL-	- N277						
10	e- CEM HVPS 2_2	.SIG		NAL-	- N278						
26	e- CEM HVPS 2_4	.SIG		NAL-	- N279						
09	p+ CEM HVPS 2_1	SIG		NAL-	- N280						
25	p+ CEM HVPS 2_2	.SIG		NAL-	- N281						
08	p+ CEM HVPS 2_4	.SIG		NAL-	- N282						
44	Serial Link Clk	.SIG		NAL-	- N283						
43	Serial Link Gate	.SIG		NAL-	- N284						
42	Serial Link Data	.SIG		NAL-	- N285						
41	+28V DC switched e	SUP		NAL3	- N286						
40	+28V DC Switched p	SUP		NAL3	- N287						
37	+28V DC Switched e/	.RTN		NAL3	- N288						
39	+28VDC SwitchedSweep	SUP		NALB	- N289						
38	+28VDC SwitchedSweep	.RTN		NALB	- N289						
11	+28V Anlog TeleBus	SUP		NALB	- N291						
45	+28V Anlog TeleBus	.RTN		NALB	- N291						
28	IsolTempMon	.SIG		NAL-	- N299						
12	NC	.-									
13	NC	.-									
14	NC	.-									
15	NC	.-									
16	NC	.-									
17	NC	.-									
21	NC	.-									
23	SC	.-									
24	NC	.-									
09	SC	.-									
30	SC	.-									
31	NC	.-									
32	NC	.-									
33	N C	.-									
34	NC	.-									
46	NC	.-									
47	NC	.-									
48	NC	.-									
49	NC	.-									
01	Signal Ground DPU08	.GND									
22	Signal Ground DPU08	.GND		NAL1	- N272						
56	Chassis Ground DPU08	.GND		NAL1	- N264						

Table 3.5.3.3-3 : Pin Allocation List of Connector JO8 (DPU)

Connector : 2DPU260J09 Item : SEM-DPU Function : TED Data/Monitors Backshell : N/A
EMC-Category : 2 Conn.-Type : DCM-37P

Pin	Signal Designation		Interface-Code Circ	Signal	Pos.	Ch. ID	Grouping Shd	Cable	Twist	Comment	New
13	Low Energy0ePul	SIG		NAL7	-	N300	1	1			
12	High Energy0ePul	.SIG		NAL7	-	N301	1	1			
11	Low Energy30ePul	.SIG		NAL7	-	N302	1	1			
10	HighEnergy30ePul	.SIG		NAL7	-	N303	1	1			
14	CABLESHIELD	.GND	SHD				1				
18	Low Energy0pPul	.SIG		NAL7	-	N304	2	2			
17	High Energy0pPul	.SIG		NAL7	-	N305	2	2			
16	Low Energy30pPul	.SIG		NAL7	-	N306	2	2			
15	HighEnergy30pPul	.SIG		NAL7	-	H307	2	2			
19	CABLE SHIELD	.GND	SHD				2				
31	Temp Monitor	.SIG		NAL-	-	N308					
30	+8V Monitor	.SIG		NAL-	-	N309					
25	+5V Monitor	.SIG		NAL-	-	N310					
29	-6V Monitor	.SIG		NAL-	-	N311					
28	+30V Monitor	.SIG		NAL-	-	N312					
27	-30V Monitor	.SIG		NAL-	-	N313					
34	+100V Monitor	SIG		NAL-	-	N314					
37	-1000V Monitor	SIG		NAL-	-	N315					
33	sweep VoltMon	.SIG		NAL-	-	N316					
36	e- CEM HVPS Mon	.SIG		NAL-	-	N317					
35	p+ CEM HVPS Mon	.SIG		NAL-	-	Y318					
26	+5V ReferenceMon	.SIG		NAL-	-	N319					
32	IFC RampVoltMon	.SIG		NAL-	-	N320					
09	IFC On Status	.SIG		NAL-	-	N321					
01	NC	.-									
02	NC	.-									
03	NC	.-									
04	NC	.-									
05	NC	.-									
06	SC	.-									
08	SC	.-									
20	SC	.-									
21	SC	.-									
22	N C	.-									
23	SC	.-									
24	NC	.-									
07	Signal Ground DPU09	.GND		NAL-	-	N322					

Table *3.5.3.3-4* : ***Pin Allocation List of Connector JO9 (DPU)***

Connector : 1MPD225J01 **Item :** SEM-MPD **Function :** MEPED Power/Timing **Backshell :** N/A
EMC-Category : 1 **Cam.-Type :** DCM-37P

Pin	Signal Designation		Interface-Code Circ	Signal	Pos.	Grouping Ch. ID	Shd Cable	Twist	Comment	New
31	+6.5V DC	.SUP		NALB	-	N200				
13	+6.5V DC	.RTN		NALB	-	N200				
33	+28V DC Switched	SUP		NALB	-	N201				
32	+28V DC Switched	.RTN		NALB	-	N201				
20	+28V AnlgTelBus	SUP		NALB	-	N202				
01	+28V AnlgTelBus	.RTN		NALB	-	N202				
29	+7.8V DC	SUP		NAL3	-	N203				
27	-7.8V DC	SUP		NAL3	-	N204				
10	+/-7.8V DC	.RTN		NAL.3	-	N205				
15	IFC Start MEPED	.SIG		NAL-	-	N206				
14	IFC Abort	.SIG		NAL-	-	N207				
35	8.32KHz IFC Clk MPD	SIG		NAL-	-	N208				
37	1/2Hz 0°/90° Swt	.SIG		NAL-	-	N209				
03	ElectrIsolTemp	.SIG		NAL-	-	N210				
04	ProtTeleIsolTemp	.SIG		NAL-	-	N211				
02	NC	.-								
05	NC	.-								
06	NC	.-								
07	NC	.-								
08	NC	.-								
09	NC	.-								
11	NC	.-								
12	NC	.-								
19	NC	.-								
21	NC	.-								
22	NC	.-								
23	NC	.-								
24	NC	.-								
25	NC	.-								
26	NC	.-								
28	NC	.-								
30	NC	.-								
34	NC	.-								
36	NC	.-								
16	Signal Ground DPU06A	.GND		GNDB	-	G200				
17	Signal Ground DPU06B	.GND		GNDB	-	0201				
18	Chassis Ground DPU06	.GND		GNDB	-	GN50				

Table 3.5.3.3- 5 : Pin ***Allocation List of Connector JO1 (MEPED)***

connector : 2MPD225J02 Item : SEM-MPD Function : MEPED Data/Monitors Backshell : N/A
EMC-category : 2 Conn.-Type : DDM-SOS

Pin	Signal Designation		Interface-Code Circ	Signal	PCS.	Ch. ID	Grouping Shd	Cable	Twist	Comment	New
04	0P1/9P1 Pulses	.SIG		NALD	-	N230	1	1			
21	0P2/9P2 Pulses	SIG		NALD	-	N231	1	1			
37	0P3/9P3 Pulses	.SIG		NALD	-	N232	1	1			
05	0P4/9P4 Pulses	.SIG		NALD	-	N233	1	1			
22	0P5/9P5 Pulses	SIG		NALD	-	N234	1	1			
38	0P6/9P6 Pulses	.SIG		NALD	-	N235	1	1			
02	CABLE SHIELD	.GND	SHD				1				
17	0E1/9E1 Pulses	.SIG		NALF	-	N236	2	2			
33	0E2/9E2 Pulses	SIG		NALF	-	N237	2	2			
50	0E3/9E3 Pulses	SIG		NALF	-	N238	2	2			
32	CABLE SHIELD	.GND	SHD				2				
31	P6 Pulses	.SIG		NAL7	-	N239	3	3			
48	P7 Pulses	SIG		NAL7	-	N240	3	3			
49	P8 Pulses	.SIG		NAL7	-	N241	3	3			
15	P9 Pulses	.SIG		NAL7	-	N242	3	3			
16	CABLE SHIELD	.GND	PHD				3				
08	ElTelBiasVoltMon	SIG		NAL-	-	N243					
25	PrTelBiasVoltMon	.SIG		NAL-	-	N244					
41	OmSenBiasVoltMon	.SIG		NAL-	-	N245					
06	IFC Ramp Monitor	.SIG		NAL-	-	N246					
23	IFC RefVolMon	.SIG		NAL-	-	N247					
20	0° RefVoltMon	.SIG		NAL-	-	N248					
36	90° RefVoltMon	.SIG		NAL-	-	N249					
14	PrTelTempMon	.SIG		NAL-	-	N250					
30	ElTelTempMon	SIG		NAL-	-	N251					
	OmniTemp Monitor	.SIG		NAL-	-	N252					
13	CircTemp Monitor	SIG		NAL-	-	N253					
29	+6.2V Bus Monitor	.SIG		NAL-	-	N254					
46	-6.2V Bus Monitor	.SIG		NAL-	-	N255					
12	+5V Bus Monitor	.SIG		NAL-	-	N256					
28	+7.8V BusMonitor	SIG		NAL-	-	N257					
45	-7.8V BusMonitor	.SIG		NAL-	-	N258					
11	+6.5V BusMonitor	.SIG		NAL-	-	N259					
39	IFC On/Off Stat	.SIG		NAL-	-	N260					
07	IFC Phase stat	SIG		NAL-	-	N261					
01	NC	.-									
03	NC	.-									
09	NC	.-									
10	NC	.-									
18	NC	.-									
19	NC	.-									
24	NC	.-									
26	NC	.-									
27	NC	.-									
35	NC	.-									
40	NC	.-									
42	NC	.-									
43	NC	.-									
44	NC	.-									
34	Signal Ground DPU07	.GND		NAL1	-	N262					

Table 3.5.3.3-6 : Pin *Allocation List of Connector* JO2 *(MEPED)*

Connector : 1TED235J01 **Item :** SEM-TED **Function :** TED Power/Timing **Backshell :** N/A
EMC-Category : 1 **Conn.-Type :** DDM-SOP

Pin	Signal Designation		Interface-Code Circ	Signal	POE.	Grouping Ch. ID	Shd	Cable	Twist	Comment	New
36	-6VDC	SUP		NAL3	-	N265					
35	+8V DC	SUP		NAL3	-	N266					
18	-6V/+8V Return	.RTN		NAL3	-	N267					
05	IFC Start TED	.SIG		NAL-	-	N 2 6 8					
07	8.32KHz IFC Clk TED	.SIG		NAL-	-	N 2 6 9					
04	sweep Clock	.SIG		NAL-	-	N270					
06	Sweep Reset	.SIG		NAL-	-	N271					
19	e- PHD 2_1	.SIG		NAL-	-	N273					
02	e- PHD 2_2	.SIG		NAL-	-	N274					
20	p+ PHD 2_1	.SIG		NAL-	-	N275					
03	pt PHD 2_2	.SIG		NAL-	-	N276					
27	e- CEM HVPS 2_1	.SIG		NAL-	-	N277					
10	e- CEM HVPS 2_2	SIG		NAL-	-	N278					
26	e- CEM HVPS 24	.SIG		NAL-	-	N279					
09	p+ CEM HVPS 2_1	SIG		NAL-	-	N280					
25	p+ CEM HVPS 2_2	.SIG		NAL-	-	N281					
08	p+ CEM HVPS 2_4	.SIG		NAL-	-	N282					
44	Serial Link Clk	.SIG		NAL-	-	N283					
43	Serial Link Gale	.SIG		NAL-	-	N284					
42	Serial Link Data	.SIG		NAL-	-	N285					
41	+28V DC Switched e	SUP		NAL3	-	N286					
40	+28V DC Switched p	SUP		NAL3	-	N 2 8 7					
37	+28V DC Switched e/	.RTN		NAL3	-	N288					
39	+28VDC SwitchedSweep	SUP		NALB	-	N289					
38	+28VDC SwitchedSweep	.RTN		NALB	-	N289					
11	+28V Anlog TeleBus	SUP		NALB	-	H291					
45	+28V Anlog TeleBus	.RTN		NALB	-	N291					
28	IsolTempMon	.SIG		NAL-	-	N299					
12	NC	.-									
13	NC	.-									
14	NC	.-									
15	NC	.-									
16	NC	.-									
17	NC	.-									
21	NC	.-									
23	NC	.-									
24	NC	.-									
09	NC	.-									
30	NC	.-									
31	NC	.-									
32	NC	.-									
33	NC	.-									
34	NC	.-									
46	NC	.-									
47	NC	.-									
48	NC	.-									
49	NC	.-									
01	Signal Ground TED01	.GND									
22	Signal Ground DPU08	.GND		NAL1	-	N272					
50	Chassis Ground DPU08	.GND		NAL1	-	N264					

Table 3.5.3.3-7 : Pin ***Allocation*** *List* **of Connector** ***J01*** *(TED)*

connector : 2TED235J02 Item : SEM-TED Function : TED Data/Monitors Backsbell : N/A
EMC-category : 2 Conn.-Type : DCM-37S

			Interface-Code				Grouping				
Pin	Signal Designation		Circ	Signal	Pos.	Ch. ID	Shd	Cable	Twist	Comment	New
13	Low Energy0ePul	SIG		NAL7	-	N300	1	1			
12	High Energy0ePul	SIG		NAL7	-	N301	1	1			
11	Low Energy30ePul	.SIG		NAL7	-	N302	1	1			
10	HighEnergy30ePul	.SIG		NAL7	-	N303	1	1			
14	CABLE SHIELD	.GND	SHD				1				
18	Low Energy0pPul	SIG		NAL7	-	N304	2	2			
17	High Energy0pPul	.SIG		NAL7	-	N305	2	2			
16	Low Energy30pPul	.SIG		NAL7	-	N306	2	2			
15	HighEnergy30pPul	.SIG		NAL7	-	N307	2	2			
19	CABLE SHIELD	.GND	SHD				2				
31	Temp Monitor	.SIG		NAL-	-	N308					
30	+8V Monitor	SIG		NAL-	-	N309					
25	+5V Monitor	.SIG		NAL-	-	N310					
29	-6V Monitor	.SIG		NAL-	-	N311					
28	+30V Monitor	.SIG		NAL-	-	N312					
27	-30V Monitor	.SIG		NAL-	-	N313					
34	+ 1 OOV Monitor	.SIG		NAL-	-	N314					
37	-1000V Monitor	.SIG		NAL-	-	N315					
33	Sweep VoltMon	.SIG		NAL-	-	N316					
36	e- CEM HVPS Mon	.SIG		NAL-	-	N317					
35	p+ CEM HVPS Mon	.SIG		NAL-	-	N318					
26	+5V ReferenceMon	SIG		NAL-	-	N319					
32	IFC RampVoltMon	SIG		NAL-	-	N320					
09	IFC On status	.SIG		NAL-	-	N321					
01	NC	.-									
02	NC	.-									
03	NC	.-									
04	NC	.-									
05	NC	.-									
06	NC	.-									
08	NC	.-									
20	NC	.-									
21	NC	.-									
22	NC	.-									
23	NC	.-									
24	NC	.-									
07	Signal Ground DPU09	.GND		NAL-	-	N322					

Table 3.5.3.3-8 : Pin ***Allocation*** *List of Connector JO2 (TED)*

Connector : 1DPU260P06 **Item :** SEM-DPU **Function :** MEPED Power/Timing **Corm.-Type :** DCMA-37P-NMB
EMC-Category : 1 **Location :** 2 6 0 **Backshell :** TBD

Pin	Signal Designation		Circ	Interface-Code Signal	Pos.	Ch. ID	Grouping Wiring	Shd	Cable	Twist	Comment	End-It.	Loc.	Connector	Pin	New
31	+6.5V DC	SUP		NALB	-	N200	TP-22					SEM-MPD	225	MPD225 PO1	31	
13	+6.5V DC	.RTN		NALB	-	N200	TP-22					IEM-MPD	225	MPD225 P01	13	
33	+28V DC Switched	.SUP		NALB	-	N201	TP-22					ZEM-MPD	225	MPD225 P01	33	
32	+28V DC Switched	.RTN		NALB	-	N201	TP-22					IEM-MPD	225	MPD225 PO1	32	
20	+28V AnlgTelBus	.SUP		NALB	-	N202	TP-22					IEM-MPD	225	MPD225 PO1	20	
01	+28V AnlgTelBus	.RTN		NALB	-	N202	TP-22					IEM-MPD	225	MPD225 P01	01	
29	+7.8V DC	SUP		NAL3	-	N203	T3-22					IEM-MPD	225	MPD225 P01	29	
27	-7.8V DC	SUP		NAL3	-	N204	T3-22					IEM-MPD	225	MPD225 PO1	27	
10	+/-7.8V DC	.RTN		NAL3	-	N205	T3-22					ZEM-MPD	225	MPD225 PO1	IO	
15	IFC Start MEPED	.SIG		NAL-	-	N206	SL-24					SEM-MPD	225	MPD225 P01	15	
14	IFC Abort	.SIG		NAL-	-	N207	SL-24					IEM-MPD	225	MPD225 P01	14	
35	8.32KHz IFC Clk MPD	.SIG		NAL-	-	N208	SL-24					IEM-MPD	225	MPD225 PO1	35	
37	1/2Hz 0°/90° Swt	.SIG		NAL-	-	N209	SL-24					SEM-MPD	22s	MPD225 PO1	37	
03	ElectrIsolTemp	.SIG		NAL-	-	N210	SL-24					SEM-MPD	22s	MPD225 P01	03	
04	ProtTeleIsolTemp	.SIG		NAL-	-	5211	SL-24					SEM-MPD	22s	MPD225 P01	04	
02	NC	.-														
05	NC	.-														
06	NC	.-														
07	NC	.-														
08	NC	.-														
09	NC	.-														
II	NC	.-														
12	NC	.-														
19	NC	.-														
21	NC	.-														
22	NC	.-														
23	NC	.-														
24	NC	.-														
25	NC	.-														
26	NC	.-														
28	NC	.-														
30	NC	.-														
34	NC	.-														
36	NC	.-														
16	Signal Ground DPU06A	.GND		GNDB	-	G200	SL-22					SEM-MPD	225	MPD225 P01	16	
17	Signal Ground DPU06B	.GND		GNDB	-	G201	SL-22					SEM-MPD	225	MPD225 P01	17	
18	Chassis Ground DPU06	.GND		GNDB	-	GN50	SL-22					SEM-MPD	225	MPD225 P01	18	

Table 3.5.3.3-9 : Pin Allocation List of Connector PO6 (DPU)

Connector : 2DPU260P07 **Item :** SEM-DPU **Function :** MEPED Data/Monitors **Corm.-Type :** DDMA-50S-NMB
EMC-Category : 2 **Location:** 260 **Backshell :** TBD

Pin	Signal Designation		Circ	Interface-Code Signal	Pos.	Ch. ID	Wiring	Grouping Shd	Cable	Twist	Comment	End-It.	Loc.	Connector	Pin	New
04	0P1/9P1 Pulses	.SIG		NALD	-	N230	TS6CP-24	1	1			SEM-MPD	225	MPD225	PO2 04	
21	0P2/9P2 Pulses	.SIG		NALD	-	N231	TS6CP-24	1	1			SEM-MPD	225	MPD225	PO2 21	
37	0P3/9P3 Pulses	SIG		NALD	-	N232	TS6CP-24	1	1			SEM-MPD	225	MPD225	PO2 37	
05	0P4/9P4 Pulses	.SIG		NALD	-	N233	TS6CP-24	1	1			SEM-MPD	225	MPD225	PO2 05	
22	0P5/9P5 Pulses	.SIG		NALD	-	N234	TS6CP-24	1	1			SEM-MPD	225	MPD225	PO2 22	
38	0P6/9P6 Pulses	.SIG		NALD	-	N235	TS6CP-24	1	1			SEM-MPD	225	MPD225	PO2 38	
02	CABLE SHIELD	.GND	SHD					1				SEM-MPD	225	MPD225	PO2 02	
17	0E1/9E1 Pulses	.SIG		NALF	-	N236	TS3CP-24	2	2			SEM-MI'D	225.	MPD225	P02 17	
33	0E2/9E2 Pulses	SIG		NALF	-	N237	TS3CP-24	2	2			SEM-MPD	225	MPD225	PO2 33	
50	0E3/9E3 Pulses	.SIG		NALF	-	N238	TS3CP-24	2	2			SEM-MPD	225	MPD225	PO2 50	
32	CABLE SHIELD	.GND	SHD					2				SEM-MPD	225	MPD225	PO2 32	
31	P6 Pulses	.SIG		NAL7	-	N239	TS4CP-24	3	3			SEM-MPD	225	MPD225	PO2 31	
48	P7 Pulses	.SIG		NAL7	-	N240	TS4CP-24	3	3			SEM-MPD	225	MPD225	P02 48	
49	P8 Pulses	.SIG		NAL7	-	N241	TS4CP-24	3	3			SEM-MPD	225	MPD225	PO2 49	
15	P9 Pulses	.SIG		NAL7	-	N242	TS4CP-24	3	3			SEM-MPD	225	MPD225	PO2 15	
16	CABLE SHIELD	.GND	SHD					3				SEM-MPD	225	MPD225	PO2 16	
08	ElTelBiasVoltMon	SIG		NAL-	-	N243	SL-24					SEM-MPD	225	MPD225	PO2 08	
25	PrTelBiasVoltMon	.SIG		NAL-	-	N244	SL-24					SEM-MI'D	225	MPD225	PO2 25	
41	OmSenBiasVoltMon	.SIG		NAL-	-	N245	SL-24					SEM-MPD	225	MPD225	PO2 41	
06	IFC Ramp Monitor	.SIG		NAL-	-	N246	SL-24					SEM-MPD	225	MPD225	PO2 06	
23	IFC RefVolMon	SIG		NAL-	-	N247	SL-24					SEM-MPD	225	MPD225	PO2 23	
20	0° RefVoltMon	.SIG		NAL-	-	N248	SL-24					SEM-MPD	225	MPD225	PO2 20	
36	90" RefVoltMon	SIG		NAL-	-	N249	SL-24					SEM-MPD	225	MPD225	PO2 36	
14	PrTelTempMon	.SIG		NAL-	-	N250	SL-24					SEM-MPD	225	MPD225	PO2 14	
30	ElTelTempMon	SIG		NAL-	-	N251	SL-24					SEM-MPD	225	MPD225	PO2 30	
47	OmniTemp Monitor	.SIG		NAL-	-	N252	SL-24					SEM-MPD	225	MPD225	PO2 47	
13	CircTemp Monitor	SIG		NAL-	-	N253	SL-24					SEM-MPD	225	MPD225	P02 13	

*Table **3.5.3.3-10** : Pin Allocation tit of Connector PO7 **(DPU) (1/2)***

Pin	Signal Designation		Circ	Signal	Pos.	Ch. ID	Wiring	Shd	Cable	Twist	Comment	End-It.	Loc.	Connector	Pin	New
29	+6.2V Bus Monitor	.SIG		NAL-	-	N254	SL-24					IEM-MPD	225	MPD225 PO2	29	
46	-6.2V Bus Monitor	.SIG		NAL-	-	N255	SL-24					IEM-MPD	225	MPD225 PO2	46	
12	+5V Bus Monitor	.SIG		NAL-	-	N256	SL-24					SEM-MPD	225	MPD225 PO2	12	
28	+7.8V BusMonitor	.SIG		NAL-	-	N257	SL-24					SEM-MPD	225	MPD225 P02	28	
45	-7.8V BusMonitor	.SIG		NAL-	-	N258	SL-24					IEM-MPD	225	MPD225 PO2	45	
11	+6.5V BusMonitor	.SIG		NAL-	-	N259	SL-24					IEM-MPD	225	MPD225 PO2	11	
39	IFC On/Off Stat	.SIG		NAL-	-	N260	SL-24					SEM-MPD	225,	MPD225 PO2	39	
07	IFC Phase Stat	SIG		NAL-	-	N261	SL-24					IEM-MPD	225	MPD225 P02	07	
-01	NC	.-														
03	NC	.-														
09	NC	.-														
10	NC	.-														
18	NC	.-														
19	NC	.-														
24	NC	.-														
26	NC	.-														
27	NC	.-														
35	NC	.-														
40	NC	.-														
42	NC	.-														
43	NC	.-														
44	NC	.-														
34	Signal Ground DPU07	.GND		NAL1	-	N262	SL-22					SEM-MPD	225	MPD225 PO2	34	

*Table **3.5.3.3-10 : Pin** Allocation List of Connector PO7 (DPU) **(2/2)***

Connector : 1DPU260P08 **Item :** SEM-DPU **Function :** TED Power/Timing **Conn.-Type :** DDMA-50P-NMB
EMC-Category : 1 **Location :** 260 **Backshell :** TBD

Pin	Signal Designation		Interface-Code Circ	Signal	Pos.	Ch.	ID	Grouping Wiring Shd Cable Twist	Comment	End-It.	Loc.	Connector	Ptn	New
36	-6V DC	SUP		NAL3	-	N265	T3-22			SEM-TED	235	TED235 P01	36	
35	+8V DC	.SUP		NAL3	-	N266	T3-22			SEM-'IED	235	TED235 P01	35	
18	-6V/+8V Return	.RTN		NAL3	-	N267	T3-22			SEM-TED	235	TED235 P01	18	
05	IFC Start TED	.SIG		NAL-	-	N268	SL-24			SEM-TED	235	TED235 P01	05	
07	8.32KHz IFC Clk TED	SIG		NAL-	-	N269	SL-24			SEM-TED	235	TED235 P01	07	
04	Sweep Cluck	.SIG		NAL-	-	N270	SL-24			SEM-TED	235	TED235 PO1	04	
06	Sweep Reset	SIG		NAL-	-	N271	SL-24			SEM-TED	235	TED235 PO1	06	
19	e- PHD 2_1	SIG		NAL-	-	N273	SL-24			SEM-TED	235	TED235 P01	19	
02	e- PHD 2_2	SIG		NAL-	-	N274	SL-24			SEM-TED	235	TED235 P01	02	
20	p+ PHD 2_1	.SIG		NAL-	-	N275	SL-24			SEM-TED	235	TED235 P01	20	
03	p+ PHD 2_2	.SIG		NAL-	-	N276	SL-24			SEM-TED	235	TED235 P01	03	
27	e- CEM HVPS 2_1	SIG		NAL-	-	N277	SL-24			SEM-TED	235	TED235 P01	27	
10	e- CEM HVPS 2_2	SIG		NAL-	-	N278	SL-24			SEM-TED	235	TED235 P01	10	
26	e- CEM HVPS 2_4	.SIG		NAL-	-	N279	SL-24			SEM-TED	235	TED235 P01	26	
09	p+ CEM HVPS 2_1	.SIG		NAL-	-	N280	SL-24			SEM-TED	235	TED235 PO1	09	
25	p+ CEM HVPS 2_2	.SIG		NAL-	-	N281	SL-24			SEM-TED	235	TED235 P01	25	
08	p+ CEM HVPS 2_4	SIG		NAL-	-	N282	SL-24			SEM-TED	235	TED235 P01	08	
44	Serial Link Clk	SIG		NAL-	-	N283	SL-24			SEM-TED	235	TED235 P01	44	
43	Serial Link Gate	.SIG		NAL-	-	N284	SL-24			SEM-TED	235	TED235 P01	43	
42	Serial Link Data	.SIG		NAL-	-	N285	SL-24			SEM-'IED	235	TED235 P01	42	
41	+28V DC Switched e	.SUP		NAL3	-	N286	T3-22			SEM-'IED	235	TED235 P01	41	
40	+28V DC Switched p	SUP		NAL3	-	N287	T3-22			SEM-'IED	235	TED235 P01	40	
37	+28V DC Switched e/	.RTN		NAL3	-	N288	T3-22			SEM-TED	235	TED235 P01	37	
39	+28VDC SwitchedSweep	.SUP		NALB	-	N289	TP-22			SEM-IED	235	TED235 P01	39	
38	+28VDC SwitchedSweep	.RTN		NALB	-	N289	TP-22			SEM-TED	235	TED235 PO1	38	
II	+28V Anlog TeleBus	.SUP		NALB	-	N291	TP-22			SEM-TED	235	TED235 P01	11	
45	+28V Anlog TeleBus	.RTN		NALB	-	N291	TP-22			SEM-TED	235	TED235 P01	45	
28	IsolTempMon	.SIG		NAL-	-	N299	SL-24			SEM-TED	235	TED235.P01	28	

Table 3.X3.3-11 : Pin Allocation List of Connector PO8 (DPU) (1/2)

Pin	Signal Designation		Circ	Signal	POE.	Ch.	ID	Wiring	Shd	Cable	Twist	Comment	Ind-It.	Loc.	Connector	Pin	New
12	NC	.-															
13	NC	.-															
14	NC	.-															
IS	NC	.-															
16	NC	.-															
17	NC	.-															
21	NC	.-															
23	NC	.-															
24	NC	.-															
09	NC	.-															
30	NC	.-															
31	NC	.-															
32	NC	.-															
33	NC	.-															
34	NC	.-															
46	NC	.-															
47	NC	.-															
48	NC	.-															
49	NC	.-															
01	Signal Ground DPU08	.GND															
22	Signal Ground DPU08	.GND		NAL1	-		N272	SL-22					SEM-TED 235		TED235 PO1	22	
SO	Chassis Ground DPU08	.GND		NAL1	-		N264	SL-22					SEM-TED 235		TED235 P01	50	

Table 3.5.3.3-11 : Pin Allocation List of Connector PO8 (DPU) (2/2)

Connector : 2DPU260P09 **Item :** SEM-DPU **Function :** TED Data/Monitors **Corm.-Type :** DCMA-37S-NMB
EMC-Category : 2 **Location :** 260 **Backshell :** T B D

Pin	Signal Designation		Interface-Code Circ	Signal	Pm.	Ch. ID	Wiring	Grouping Shd	Cable	Twist	Comment	End-It.	Loc.	Connector	Pin	New
13	Low Energy0ePul	.SIG		NAL7		N300	TS4CP-24	1	1			SEM-TED	235	TED235 PO2	13	
12	High Energy0ePul	.SIG		NAL7		N301	TS4CP-24	1	1			SEM-TED	235	TED235 P02	12	
11	Low Energy30ePul	SIG		NAL7		N302	TS4CP-24	1	1			SEM-TED	235	TED235 PO2	11	
10	HighEnergy30ePul	.SIG		NAL7		N303	TS4CP-24	1	1			SEM-TED	235	TED235 P02	10	
14	CABLE SHIELD	.GND	SHD					1				SEM-TED	235	TED235 P02	14	
18	Low Energy0pPul	.SIG		NAL7		N304	TS4CP-24	2	2			SEM-TED	235	TED235 PO2	18	
17	high Energy0pPul	.SIG		NAL7		N305	TS4CP-24	2	2			SEM-TED	235	TED235 P02	17	
16	Low Energy30pPul	.SIG		NAL7		N306	TS4CP-24	2	2			SEM-TED	235	TED235 P02	16	
15	HighEnergy30pPul	.SIG		NAL7		N307	TS4CP-24	2	2			SEM-TED	235	TED235 P02	15	
19	CABLE SHIELD	.GND	SHD					2				SEM-TED	235	TED235 P02	19	
31	Temp Monitor	SIG		NAL-		N308	SL-24					SEM-TED	235	TED235 PO2	31	
30	+8V Monitor	SIG		NAL-		N309	SL-24					SEM-TED	235	TED235 PO2	30	
25	+5V Monitor	.SIG		NAL-		N5310	SL-24					SEM-TED	235	TED235 P02	25	
29	-6V Monitor	.SIG		NAL-		N311	SL-24					SEM-TED	235	TED235 P02	29	
28	+30V Monitor	.SIG		NAL-		N312	SL-24					SEM-TED	235	TED235 PO2	28	
27	-30V Monitor	.SIG		NAL-		N313	SL-24					SEM-TED	235	TED235 P02	27	
34	+ 100V Monitor	SIG		NAL-		N314	SL-24					SEM-TED	235	TED235 P02	34	
37	-1000V Monitor	SIG		NAL-		N315	SL-24					SEM-TED	235	TED235 P02	37	
33	sweep VoltMon	SIG		NAL-		N316	SL-24					SEM-TED	235	TED235 P02	33	
36	e- CEM HVPS Mon	.SIG		NAL-		N317	SL-24					SEM-TED	235	TED235 P02	36	
35	p+ CEM HVPS Mon	.SIG		NAL-		N318	SL-24					SEM-TED	235	TED235 P02	35	
26	+5V ReferenceMon	.SIG		NAL-		N319	SL-24					SEM-TED	235	TED235 PO2	26	
32	IFC RampVoltMon	.SIG		NAL-		N320	SL-24					SEM-TED	235	TED235 P02	32	
09	IFC On status	SIG		NAL-		N1321	SL-24					SEM-TED	235	TED235 P02	09	
01	NC	.-														
02	N C	.-														
03	NC	.-														
04	NC	.-														
05	NC	.-														
06	NC	.-														
08	NC	.-														
20	NC	.-														
21	NC	.-														
22	NC	.-														
23	NC	.-														
24	NC	.-														
07	Signal Ground DPU09	.GND		NAL-		N322	SL-24					SEM-TED	235	TED235 PO2	07	

*Table **3.5.3.3-12 :** Pin **Allocation** List of Connector PO9 (DPU)*

3.6. TEST INTERFACES

3.6.1. Electrical Test Interface Requirements

3.6.1.1. Interface Data Sheets

N/A.

3.6.1.2. Interface Circuits

N/A.

3.6.2. Electrical Test Interface Connectors

Table 3.6.2-l identifies the test connector types at the SEM-2 boxes DPU, MEPED, and TED.

These connectors are not for use on the METOP satellite.

Connector	Connector-Type	Function
DPU J10	DCM-37S	Test DPU
MPD JO3	DCM-8W8S	Test MEPED
MPD JO4	DDM-30WS7S	Test MEPED
TED JO3	DBM-25S	Test TED
TED JO5	DDM-SOS	Scale Connector
TED JO6	DCM-8W8S	Polarity Connector

Table 3.6.2-l : *Test Connector Types at SEM-2 Boxes*

3.6.3. Electrical Test Interface Pin Allocation Lit

N/A.

3.7. HARNESS

The harness between METOP units and the SEM-2 is under the responsibility of the PLM, based on the connector & pin lay-out definition and electrical performances from § 3.4 and 3.5.2.

The harness between the SEM-2 units is under the responsibility of the PLM. based on the connector & pin lay-out definition from § 3.5.3. and electrical performances as defined below (the harness max length is defined for reference in § 2.2.1.).

Critical cable impedances are those of the TED and MEPED pulse output lines to the DPU. The pulse output lines are contained in five shielded bundles as defined in Table 3.7-l.

Cable to/from Connector	Pulse Line Pins	Shield Pin
DPU J7 to/from MEPED J2	4,5,21,22,37,38	2
DPU J7 to/from MEPED J2	17,33,50	32
DPU J7 to/from MEPED J2	15,31,48,49	16
DPU J9 to/from TED J2	10,11,12,13	14
DPU J9 to/from TED J2	15,16,17,18	19

***Table* 3.7-l *: SEM-2 Internal* Pulse Output Lines**

The capacitance to ground for any pulse line, with the other pulse lines within the group and the group shield grounded, must be less than 1 nF.

3.8. EMC INTERFACE DESCRIPTION

3.8.1. Electrical Bonding

3.8.1.1. General

The TED and MEPED are electrically bonded to the METOP spacecraft structure by means 'of a METOP supplied bonding straps that are bolted to the instrument at location TBD_{MET}.

The DPU unit is directly grounded to the PLM structure through its attachments.

3.8.1.2. Joint Faces

Not applicable for SEM-2 units.

3.8.1.3. Structural Parts

Not applicable for SEM-2 units.

3.8.1.4. Unit Housings

Not applicable for SEM-2 units.

3.8.1.5. Thermal Blankets

3.8.1.5.1. Bonding of Thermal Blankets

Thermal blanket foil shall carry a conductive layer. Each electrically conductive layer of ML1 shall be grounded to structure.

The number of bonding points per sheet of MLI material shall be two points, at diagonal comers.

3.8.1.5.2. Thermal Blanket Surface Resistance

The DC resistance between the MLI bonding point and any point belonging the metallized face of any foil shall be less then 50 Ω.

3.8.1.6. Other Conductive Components

Not applicable for SEM-2 units.

3.8.1.7. Cable and Harness Shields

Not applicable for SEM-2 units.

3.8.1.8. Connectors

Bonding Resistance of Connector Receptacle

The connector receptacle shall be bonded to the equipment case with a DC resistance of ≤ 10 mΩ.

3.8.2. Grounding and Isolation

The grounding system of the instrument shall use separate grounds (see Figure 3.8.2-l) as follows :

- +28V Main Power Ground
- +28V Switched TLM Bus
- +10V Interface Ground
- Signal Ground

Each ground shall be electrically isolated from all other grounds within the instrument and from chassis by 100 kΩ or greater DC resistance in parallel with a stray capacitance of ≤ 50 nF except for signal ground in the TED, which is tied to chassis (TBC_{SEM}).

Between the signal ground and the +28V main power ground the isolation requirement shall be 1MΩ in parallel with a stray capacitance of I50 nF (TBC_{SEM}).

3.8.2.1. **+28V** Main Power Ground

The +28V main power return is grounded within the PCU to structure.

3.8.2.2. **+28V Switched** Telemetry **Ground**

The +28V switched telemetry return is grounded within the PCU to structure.

3.8.2.3. **+10V Interface Ground**

The + 10V interface return is grounded within the NIU to structure.

3.8.2.4. Signal Ground

Signal ground is the power return line for the secondary side of the instrument DC/DC converters. The signal ground shall be grounded within the SEM-2 DPU to structure.

In the case that the signal ground is ground& to structure at the TED, the instrument must meet the following requirements :

- The common mode voltage emission in the frequency range 100 kHz to 50 MHz of the DPU measured between the signal return line and structure shall be less than 100 mV. This shall be measured with a flight representative DPU-TED harness in length and Wire Gauge (TBC_{SEM}).
- For the interconnected DPU and MEPED, the capacitance between signal ground ad the structure shall be c 150 nF (TBC_{SEM}).

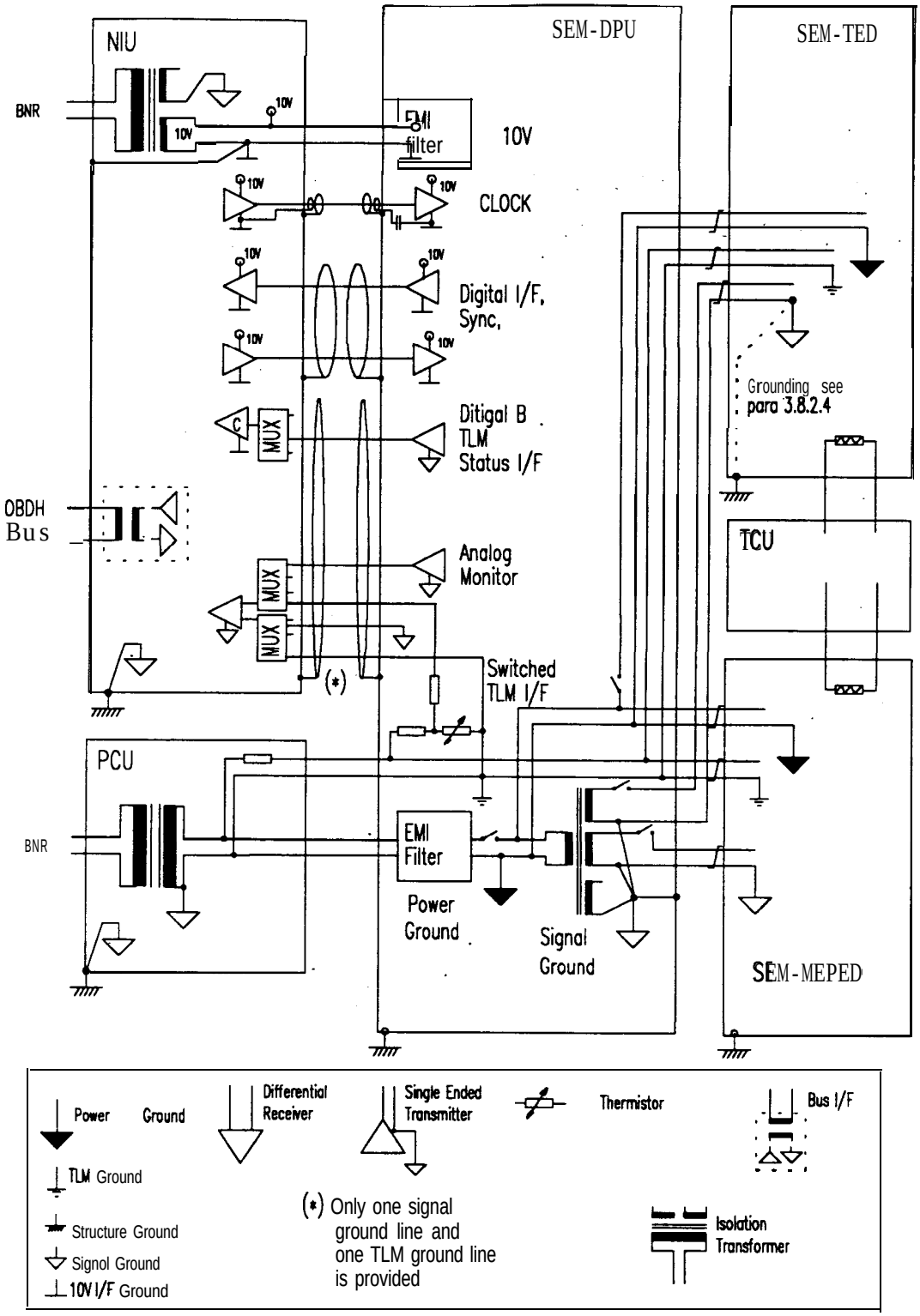

Note : all cables shall have an outer conductive shield which is tied to chassis at each end via the connector shell.

Figure 3.8.2-1 : ***Grounding and Isolation Conceptfor SEM-2***

3.8.3. Shielding

3.8.3.1. Wire Shielding

3.8.3.1.1. Bonding of Shields

Not applicable.

3.8.3.1.2 Overall Shield

Not applicable.

3.8.3.1.3 Shields as Current-Canying Conductors

Shields shall not be used as intentional current-carrying conductors and not as return lines for power and signal with exception of the RF coaxial lines.

3.8.3.2. Case Shielding

Not applicable.

Note : SEM boxes are not sealed units and are compatible with the launch pressure profile.

3.8.4. Electrostatic **Susceptibility**

The SEM-2 TED is sensitive to surface charging in the immediate vicinity. Therefore all PLM surfaces in the vicinity of the SEM-2 TED shall be conductive. The vicinity is defined as the area around the TED with a radius of 600 mm measured from the TED centre of dimension.

3.8.5. **SEM-2** Frequency **Characteristics**

The internal, frequencies are :

Source	Frequency	User
TBD_{SEM}	TBD_{SEM}	TBD_{SEM}

3.8.6. Magnetic Moment

The maximum magnetic moment of the whole SEM-2 instrument (DPU, MEPED, TED) shall not exceed 500 mAm^2.

The magnetic moment correspond to a magnetic field of 100 nT at 1 m distance (1 Gauss equals to 10^{-4} T).

List of Magnetic Material

Magnetic materials used in the instrument are listed in Table 3.8.5-1.

Material	**Standard**	Magnetic Characteristic	**Remark**
name of material	***AISI etc.***	***soft /hard***	
Two pairs of rare Earth cobalt magnets with soft iron return yoke are used for electron shielding in the MEPED proton telescopes	TBD_{SEM}	TBD_{SEM}	MEPED complies with the magnetic moment requirement above.

Table 3.8.5-I : ***Magnetic Materials Used in the Instrument***

3.8.7. EMC Performance Requirements

The EMC performances for the SEM-2 are dealt within § 4.3.

3.9. RF INTERFACE DESCRIPTION

N/A for SEM-2.

4. INSTRUMENT VERIFICATION DESCRIPTION

BLANK

4.1. MECHANICAL / STRUCTURAL VERIFICATION

4.1.1. Structural Analysis

4.1.1.1. Quasi-Static Loads (Interface)

Requirement for analysis will be determined by outcome of accommodation analytic results.

The METOP requirements are dealt with in § 2.2.8.

4.1.1.2. Structural /Dynamic Analyses

Requirement for analysis will be determined by outcome of accommodation analytic results.

4.1.1.3. Instrument Shock Environment

The SEM-2 units will be subject to the following shock environment :

METOP Shock Levels (g peak, See notes)	
100 Hz	37 g
900 Hz	350 g (Q > 10) 310 g (Q = 10)
2000 Hz	350 g (Q > 10) 310 g (Q = 10)
4000 Hz	300 g

Notes

The acceleration shall be derived from the curve obtained by linear connection on a logarithmic chart of the provided points

The shock spectrum in each direction of the three orthogonal axes shall be equivalent to a half sine pulse of 0.5 ms duration and 200 g (zero to peak) amplitude.

4.1.2. Structural Tests

It is recognised by the Single Space Segment Team of METOP, that instrument's capabilities are different from the METOP loads specified in § 4.1.2. The instrument's design and qualification status is summarized in Appendix of this section of the ICD. METOP's environment herein are initial predictions and will be updated following future analysis and the satellite structural model test campaign.

4.1.2.1. Structural Mathematical Model Validation

Not applicable for SEM-2.

4.1.2.2. Vibration Test : High Level Sine Sweep

The SEM-2 will be subject to the sine vibration satellite level testing. Preliminary predictions of the worst case imposed environment are as follows :

METOP High Level Sine Sweep Levels (TBC_{MET} *)	
QUAL	All three axes 6 to 20 Hz ±9.3 mm 20 to 60 Hz ±15 g 60 to 100 Hz ±6 g Sweep rate : 2 Oct/min. No notching is allowed.
ACC	All three axes 6 to 20 Hz ±7.5 mm 20 to 60 Hz ±12 g 60 to 100 Hz ±4.8 g Sweep rate : 4 Oct/min. No notching is allowed.

*: To be confirmed / updated after structural model testing.

4.1.2.3. Vibration Test : Sine Burst

METOP has no sine burst test requirement.

4.1.2.4. Vibration Test : Random Levels

The SEM-2 will be subject to an acoustic environment during satellite tests which will result in an equivalent random input at the instrument interface. Preliminary prediction of this input is as follows :

	METOP Random Vibration Test Levels (TBC_{MET} *)					
	METOP Requirements for MEPED			METOP Requirements for TED & DPU		
QUAL	All Three Axes			All Three Axes		
	Frequency Range (Hz)	Power Spectral Density g^2/Hz	Slope (dB/Oct.)	Frequency Range (Hz)	Power Spectral Density g^2/Hz	Slope (dB/Oct.)
	20 to 100		+3	20 to 100		+3
	100 to 400	0.218		100 to 400	0.290	
	400 to 2000		-3 out-of-plane	400 to 2000		-3 out-of-plane
			-4 in-plane			-4 in-plane
	Overall level : 14.7 g rms normal, 13.6 g rms lateral Duration 2 min per axis			Overall level : 17.0 g rms normal, 15.7 g rms lateral Duration 2 min per axis		
ACC	All Three Axes			All Three Axes		
	Frequency Range (Hz)	Power Spectral Density g^2/Hz	Slope (dB/Oct.)	Frequency Range (Hz)	Power Spectral Density g^2/Hz	Slope (dB/Oct.)
	20 to 100		+3	20 to 100		+3
	100 to 400	0.1401		100 to 400	0.186	
	400 to 2000		-3 out-of-plane	400 to 2000		-3 out-of-plane
			-4 in-plane			-4 in-plane
	Overall level : 11.8 g rms normal, 10.9 g rms lateral Duration 1 min per axis			Overall level : 13.6 g rms normal, 12.6 g rms lateral Duration 1 min per axis		

* : To be confirmed / updated after structural model testing.

4.1.2.5. Acoustic Test

The SEM-2 TED and MEPED will be subject to an acoustic test at satellite level, as follows :

Octave Band Centre Frequency (Hz)	Qualification Level (dB)	Acceptance Level (Flight Limit)	Test Tolerance (dB)
31.5	132	,128	-2. +4
63	1 3 4	130	-1, +3
125	139	135	-1, +3
250	143	139	-1, +3
500	138	134	-1, +3
1000	132	128	-1, +3
2000	128	124	-1, +3
4000	124	120	-4, +4
8000	120	116	-4, +4
Overall level	146	142	-1. +3
Test Duration	2 minutes'	1 minute	-

The equivalent random environment is illustrated in § 4.1.2.4.

4.2. THERMAL VERIFICATION : THERMAL TESTS

4.2.1. Thermal Balance Test

A thermal Balance Test (TB) shall validate the instrument thermal control and accommodation on METOP, and the SEM-2 TED and MEPED thermal mathematical models used for the temperature predictions for all flight cases (correlation of these instrument models within the METOP thermal enviroximent with an accuracy better than ± 5 deg. C on instrument transient and steady-state cases). This will be performed during the METOP system TB test. The evaluation of test results at instrument level is Instrument Supplier responsibility.

4.2.2. Thermal Vacuum Tests

The thermal cycle vacuum tests at instrument level evaluate and demonstrate the functional performance of each unit under the extreme and nominal modes of operation while in vacuum and. at temperatures more extreme than predicted for the orbit conditions.

The instrument qualification and acceptance thermal vacuum test includes the cycles and the extreme temperature levels as defined below :

SEM-2 Thermal Vacuum Testing				
		TED	MEPED	DPU
Qualification Levels	Cycles	4	4	4
	High Temperature Limit (deg. C)	+40	+30	+40
	Low Temperature Limit (deg. C)	-30	-30	-30
Acceptance Levels	Cycles	4	4	4
	High Temperature Limit (deg. C)	+30	+25	+30
	Low Temperature Limit (deg. C)	-20	-20	-20

4.3. EMC VERIFICATION

4.3.1. EMC Performance Requirements

4.3.1.1. Conducted Emission

'The conducted emission on each individual power line shall not exceed the limits as given below.

4.3.1.1.1. SEM-2 Design Requirements

Conducted Emissions on the +28 Volt Main Bus and +28 Volt Switched Telemetry Bus

Load Current Ripple

The peak to peak amplitude of the steady state **load current ripple shall not exceed 20 mA peak to peak** The fundamental frequency of load current ripple shall not exceed 100 kHz.

Inrush Current Rate (Load Current Rate)

The rate of change of **load current shall not exceed 20 mA/µs.**

Inrush Current (Transient Load Current)

Requirement per individual bus.
Exclusive of instrument turn-on, transient load currents drawn by the instrument shall not exceed 150 % of the maximum average steady state current drawn from the +28 V Main bus. Steady State operation shall be attained by within 30 ms from the start of the transient. A transient is defined as an event having a duration of less than 50 ms, non-repetitive. Steady State is defined as an event having a duration of greater than 50 ms, non repetitive.

Requirement for. combined 28 V busses.
At turn-on, the combined current drawn from all +28 Volt **busses shall not exceed 3 Amperes peak. Steady state operation shall be attained within 1 second form the start of the turn-on transient.**

Conducted Emissions on the +10 Volt Interface Bus

Load Current Ripple

The peak to peak amplitude of the steady state load current ripple shall not exceed 3 mA peak to peak. The fundamental frequency of load current ripple shall not exceed 2.5 MHz.

Inrush Current Rate (Load Current Rate)

The rate of change of load current shall not exceed 20 mA/µs.

Inrush Current (Transient Load Current)

Transient load currents drawn by the instrument shall not exceed 125 % of the maximum average steady state current drawn from the +10 V bus. Steady State operation shall be attained by within 50 ms from the start of the transient.

Test methods CE01 and CEO3 are used in accordance with § 4.3.3. An oscilloscope with a current probe (D.C. to 30 MHz minimum bandwidth) may be used in lieu of the EMI meter specified by the test method.

4.3.1.1.2. METOP Requirements

For instrument characteaisation only. METOP assumes compatibility of the instrument 'with these requirements.

Limits for +28 Volt Main Bus

Conducted emission in the frequency range 30 Hz to 50 MHz, which may appear on positive and return leads in differential and common mode, shall be within the maximum specified levels of Fig. 4.3.1.1-1.

Note : The maximum frequency of 50 MHz can be reduced to the highest frequency (+9 harmonics) used by the instrument.

The Common Mode CE requirement is a specific METOP requirement.

Limits **for +28 Volt Switched TLM Bus**

The limit for the load current ripple for the +28 V Switched TLM Bus is $< 3\ mA_{pp}$.

Limits **for Active Heater Power Bus**

Conducted emission in the frequency range 30 Hz to 50 MHz, which may appear on positive and return leads, shall be within the maximum specified levels of Figure 4.3.1.1-2.

Note : The maximum frequency of 50 MHz can be reduced to the highest frequency (+9 harmonics) used by the instrument.

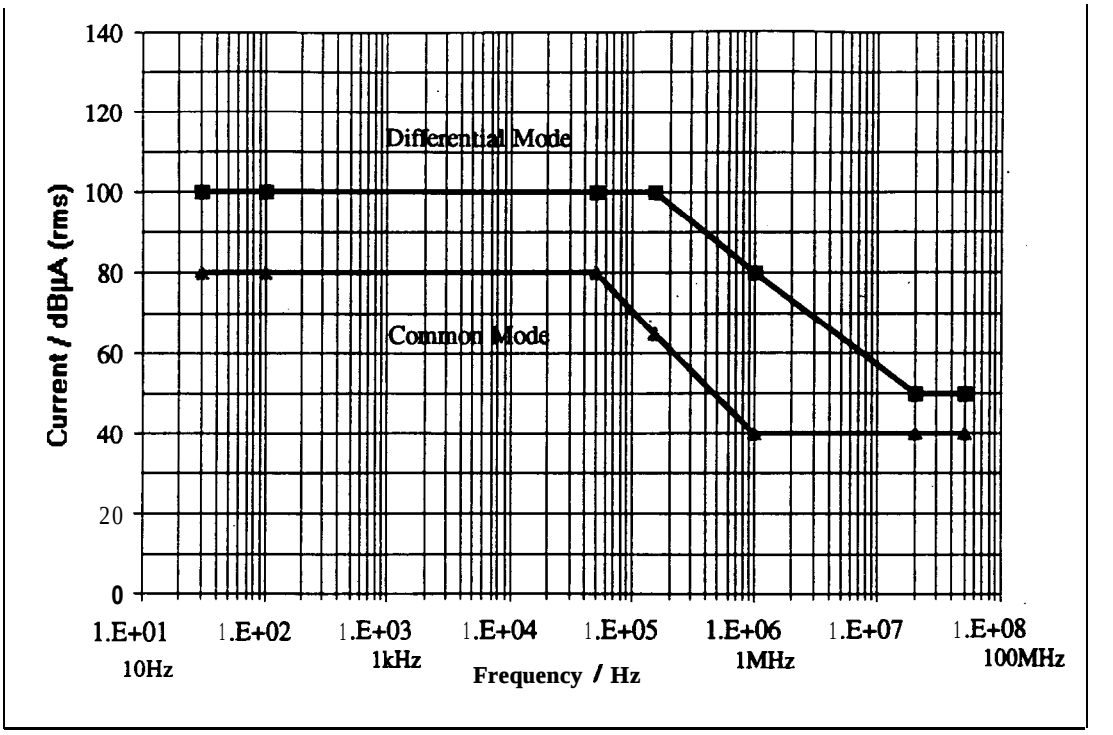

Fig. 4.3.1.1-I : Conducted Emission Limit, NB, DM, CM, 28V Reg. Power Leads, PLM Instrument

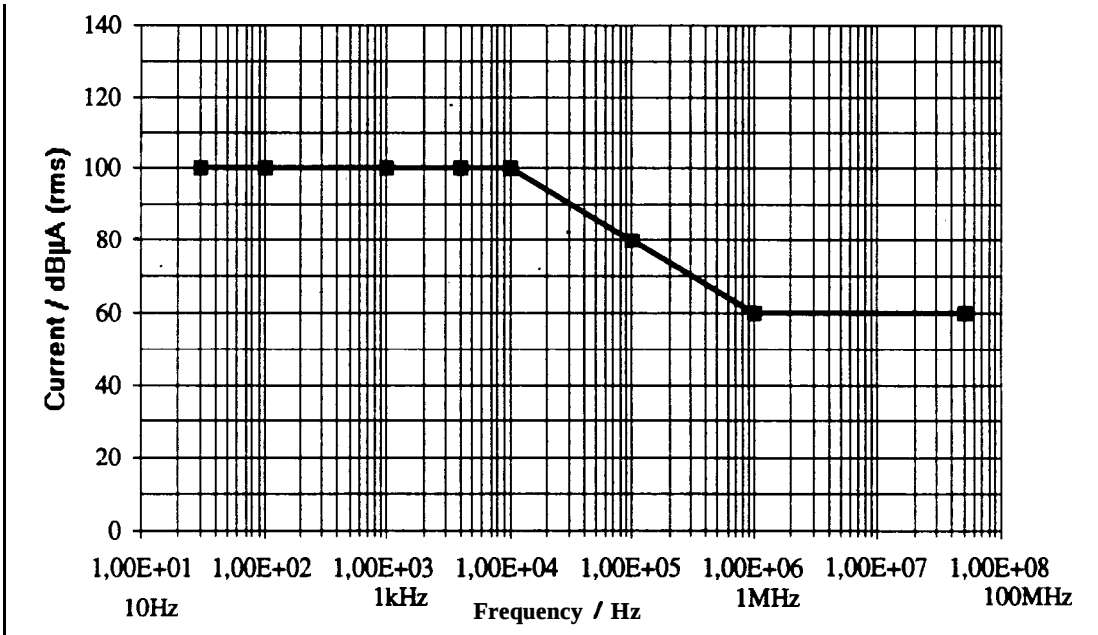

Fig. 4.3.1.1-2 : Conducted Emission Limit, NB, DM, Thermal Control Heaters

4.3.1.2. Conducted Susceptibility

Frequency Domain

The instrument shall operate without degraded performance in the presence of sinusoidal noise coupled into the power lines between the frequency range 30 Hz and 150 kHz:

+28 V Main Bus / +28 V Switched TLM Bus	injected Voltage	300mVpp
+10 V Interface Bus	injected Voltage	100 mVpp

The test set-up shall be in accordance to § 4.3.3.

Time Domain

The instrument shall operate without degraded performance when subjected to a series of transient pulses, 10 µsec in width and PRF of 10 Hz 'applied to the power lines for 10 min. :

+28 V Main Bus / +28 V Switched TLM Bus	spike level	+10 V / -12 V
+ 10 V Interface Bus	spike level	+1 vi-1 v

The test method CS06 shall be in accordance to § 4.3.3.

Special METOP Requirement

For instrument characterisation only. METOP assumes compatibility of the instrument with these requirements.

In addition to above requirements, the SEM-2 will experience a common mode sinusoidal noise 300 mV_{pp} in the frequency range 100 kHz and 50 MHz. The noise will be injected between :

the +28 V main bus return line and unit housing, according to Figure 4.3.1.2-I

and the +10 V interface bus return line and unit housing, according to Figure 4.3.1.2-2

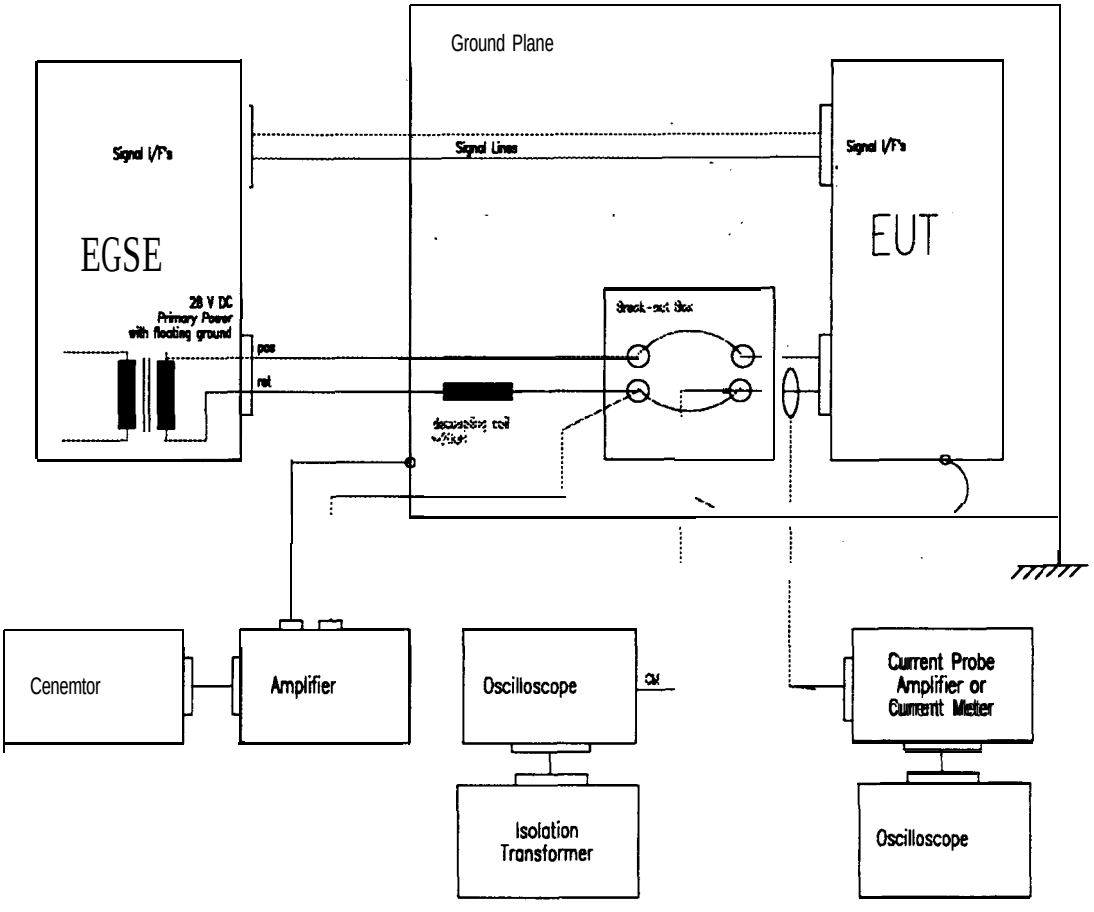

Fig. 4.3.1.2-I : Common Mode Noise Test on the +28 V Main Bus

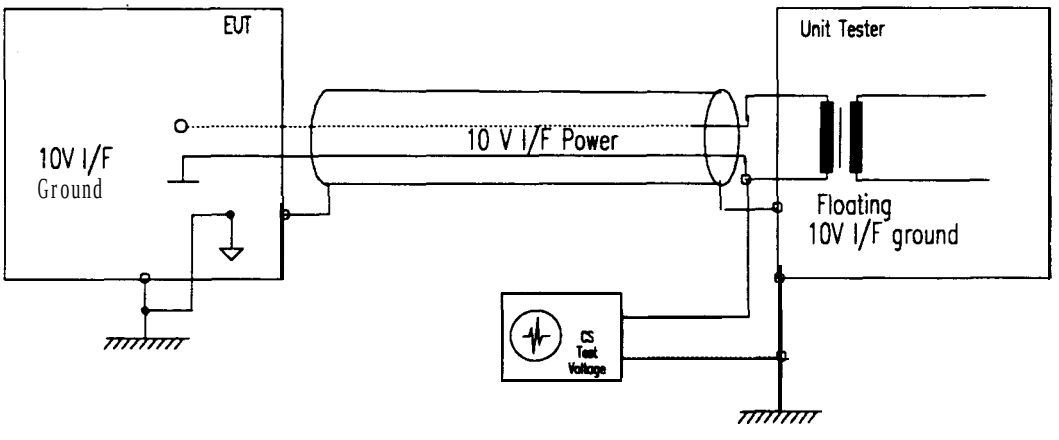

Fig. 4.3.1.2-2 : Common Mode Noise Test on the + 10 V Interface Bus

4.3.1.3. Radiated Emission

4.3.1.3.1. Mil-Std-REO2 Requirements

Broad-band and Narrow-band radiated emission measurements shall be made over the frequency range of 14 kHz to 2 GHz in accordance with Mil-Std 461/462 RE02 requirements. For the discrete ADCS and SARP-3 sensitive bands listed below, broad-band noise and discrete signals shall not exceed -60 dBm when tested in accordance with the methods of § 4.3.1.3.2 below.

59.458 MHz ± 0.5 kHz	60.100 MHz ± 0.5 kHz
141.360 MHz ± 0.5 kHz	142.900 MHz ± 0.5 kHz
282.733 MHz ± 0.5 kHz	285.813 MHz ± 0.5 kHz
371.921 MHz ± 0.5 kHz	375.972 MHz ± 0.5 kHz
624.925 MHz ± 0.5 kHz	631.730 MHz ± 0.5 kHz
743.841 MHz ± 0.5 kHz	75 1.944 MHz ± 0.5 kHz

4.3.1.3.2. SARR, SARP-3 and ADCS Receiver Channel Guard Limits

Emission measurements shall be made in accordance with Mil-Std-461/462 RE02 with the EMI meter replaced by a MITEQ preamp (AU-2A-0550 or equivalent) and a spectrum analyzer (HP 8566a or equivalent). The instrument under test and the associated clock and control signals shall have power applied and the difference in the analyzer levels shall be noted for both white noise and spurious signals.

The test antenna shall be tuned to the centre of each of the four bands below. Prior to making the actual measurements, the test antenna shall be demated and the cable terminated in 50 ohms. The noise floor of the equipment shall be verified to be below the specified maximum level for each measurement level. A guideline for establishing the resolution bandwidth is 100 Hz for both the -150 and -145 dBm levels, 1 kHz for the -125 dBm levels and 3 kHz for the -100 dBm levels. The specified maximum radiation limits for all discrete signals and noise power are listed below.

Frequency range (MHz)	Radiation Limit (dBm)	E-field Limit (dB µV/m) For Reference Only	Notes
118.00 - 120.000	-100	18.9	121.5 MHz
120.000 - 121.450	-125	-6	121.5 MHz
121.450 - 121.485	-145	-2.6	121.5 MHz-
121.485 - 121.515	-150	-31	121.5 MHz
121.515 - 121.550	-145	-26	121.5 MHz
121.550 - 123.000	-125	-5.9	121.5 MHz
123.000 - 125.000	-100	19.2	121.5 MHz
236.000 - 240.000	-100	24.9	243.0 MHz
240.000 - 242.925	-125	0	243.0 MHz
242.925 - 242.975	-145	-20	243.0 MHz
242.975 - 243.025	-150	-25	243.0 MHz
243.025 - 243.075	-145	-20	243.0 MHz
243.075 - 246.000	-125	0.1	243.0 MHz
246.000 - 250.000	-100	25.3	243.0 MHz
385.100 - 401.100	-100	29.4	406.05 MHz
401.100 - 405.900	-125	4.5	406.05 MHz
405.900 - 406.000	-145	-15.5	406.05 MHz
406.000 - 406.100	-150	-20.5	406.05 MHz
406.100 - 406.200	-145	-15.5	406.05 MHz
406.200 - 411.000	-125	4.6	406.05 MHz
411.000 - 425.000	-100	29.9	406.05 MHZ
396.000 - 401.500	-125	4.4	401.65 MHz
401.500 - 401.600	-145	-15.6	401.65 MHz
401.600 - 401.700	-150	-20.6	401.65 MHz
401.700 - 401.800	-145	-15.6	401.65 MHz
401.800 - 406.000	-125	4.5	401.65 MHz

4.3.1.3.3. METOP Requirements

For instrument characterisation only. METOP assumes compatibility of the instrument with this requirement

The radiated emissions in the frequency range 14 kHz to 2 GHz shall not exceed the limit given in Table 4.3.1.3-1.

Frequency Range	E-Field Limits (dBµV/m) TBC_{MET}	Remark
10 kHz . . . 2 GHz	+ 50	Covered by Mil-Std 461/462 RE02 *
2 GHz ... 40 GHz	+ 70	

* : The requirements of Mil-Std 461/462 RE02 are more stringent than the METOP RE limits

Table 4.3.1.3-l : *BE-E- Field Limit (NB, AC, Electrical Fields)*

Radiated emissions in the METOP payload and system receiver channel guard bands shall not exceed the limits defined here below :

Frequency Range (MHz)	Radiation Limit (dBm)	E-Field Level (dBµV/m) TBC_{MET}	Remark
1217 - 1257	N/A	+ 21	GRAS
1565 - 1614	N/A	+ 23	
2051.9 - 2055.0	N/A	+ 45	SBS
5254.7 - 5255.3	N/A	+ 28	ASCAT
400 - 500	N/A	+ 20	Applies during launch only
5450 - 5825	N/A	+ 61	

Table 4.3.1.3-2 : *Radiated Emission Notches for SEM-2*

4.3.1.4. Radiated Susceptibility

The instrument will experience a radiated electric field of 1 Vrms/m for frequencies between 14 kHz and 1 GHz and 2 Vrms/m for frequency between 1 GHz and 18 GHz. The test shall be done with at least 7 discrete frequencies / decade. The radiated E-Field shall be amplitude modulated by a sine wave at 1 kHz with a modulation depth of 50 %.

The test method is defined in § 4.3.3.

In addition the following frequencies shall be applied on :

Frequency	Level (TBC_{MET})	Modulation	Source Unit
SEM-2 MEPED			
5.25 GHz	30 Vrms/m	Pulse width = 8.22 ms, chirp rate = - 50 kHz/ms PRF = 4.94	ASCAT
		Pulse width = 10.32 ms, chirp rate = ± 24 kHz/ms PRF = 4.94 Hz	
2.230 GHz	20 Vrms/m	Pulsed 4 kHz PRF, duty cycle 50%	S-Band Downlink
SEM-2 TED			
2.230 GHz	10 Vrms/m	Pulsed 4 kHz PRF, duty cycle 50%	S-band downlink

4.3.2. EMC Analysis

The EMC of the SEM-2 shall be characterised by test and test discrepancies will be described by the Instrument Supplier. METOP will further assess the impacts on METOP performance.

Magnetic Moments

The magnetic moments shall be determined by analysis or test.

4.3.3. EMC Tests

EMC tests shall be performed in accordance with MIL-STD-462C.

Compliance with EMC requirements shall be demonstrated on all models delivered to METOP.

The Radiated Emission tests are applicable on all models delivered to METOP.

The Conducted Emission tests are applicable only on the first instrument model delivered to METOP.

4.4. ELECTRICAL FUNCTIONAL VERIFICATION

In general, the test which are described here below are performed to ascertain the instrument functional performances and culminate with the instrument calibration.

As regards the tests performed after delivery, they are described in § 5 and mainly deal with instrument health checks performed both at ambient and in thermal vacuum enviromnent.

4.4.1. Electrical Interface Tests

In general, throughout the instrument build-out, every interface is thoroughly checked to ensure the compatibility, the adequacy of the electrical interfaces, in propagation from the sensor output / input up to the instrument electronics outputs to the spacecraft on-board equipment, for the basic circuitry and signals : power, measurement data, housekeeping data, commands, clocks, sampling signals...

From a system point of view, the essential step is the measurement of the spacecraft interface signals and characteristics. The operational mode of the spacecraft system shall be simulated to ascertain interface adequacy : special attention is to be paid for the command and acquisition timing and circuit loading should be representative of the on-board characteristics.

4.4.2. Functional Test

It is the sole responsibility of the Instrument Supplier to define and verify the proper functions of the instrument prior to delivery to METOP. This type of tests are tailored to the specific instrument function verification and they serve as instrument health checks that are performed routinely throughout the instrument development programme.

A functional test of the instrument with a METOP representative harness shall be foreseen.

A subset of these tests will constitute later the core of the system testing when the instrument is integrated on-board the PLM.

4.4.3. Performance Test

It is also the sole responsibility of the Instrument Supplier to define and verify the ultimate mission performances of the instrument prior to delivery to METOP. This type of tests are tailored to the specific instrument performances and they are achieved ultimately with the instrument calibration which requires a rather sophisticated and controlled test set-up.

A subset of these tests may later constitute the system performance test with a reduced on-ground set-up. A go / no-go approach is preferred at system level (PLM and Satellite), due to the complexity of the test set-up and the AIT schedule limitations.

Calibration

It is the sole responsibility of the Instrument Supplier to calibrate the instrument prior to delivery to METOP. Re-calibration, if deemed necessary, will also be under the responsibility of the Instrument

Supplier. The calibration data shall be made' available on-request for the preparation of the system integrated instrument performance test.

APPENDIX : INSTRUMENT ACHIEVED QUALIFICATION STATUS

Instrument Shock Environment Test

SEM-2 Status Test Levels	
Qualification Levels	**Acceptance Levels**
Q=10	Q = 10
110 Hz 20g	110 Hz 14 g
400 Hz 200 g	400Hz 133 g
1250 Hz	1250 Hz
1600HZ 300 g	1600 Hz 200 g
4000 Hz	4000 Hz
Tolerance : +50 % / -10 %	Tolerance : +50 % / -10 %

Vibration Test : High Level Sine Sweep

The instrument has not been subject to a High Level Sine Sweep test.

Vibration Test : Sine Burst

The insuument has been subject to the following Sine Burst environment :

	Sine Burst Test Levels
QUAL	All three axes Test level : 15.5 g Test frequency : 20 Hz Duration : 0.5 second
ACC	All three axes Test level : 12.4 g Test frequency : 20 Hz Duration : 0.5 second

Vibration Test : Random Levels

The instrument has been subject to the following random environment :

SEM-2 MEPED, TED and DPU Status			
	All Three Axes		
	Frequency Range (Hz)	Power Spectral Density g^2/Hz	Slope (dB/Oct.)
Q	20 to 75	0.011	
U	75 to 150		+10
A	150 to 500	0.11	
L	500 to 2000		-7
	Overall level : 8.8 g rms Duration 1 min per axis		
	All Three Axes		
	Frequency Range (Hz)	Power Spectral Density g^2/Hz	Slope (dB/Oct.)
	20 to 75	0.008	
A	75 to 150		+10
C	150 to 500	0.08	
C	500 to 2000		-7
	Overall level : 7.52 g rms Duration 1 minperaxis		

5. INSTRUMENT GSE AND AIV INTERFACES

BLANK

5.1. INSTRUMENT GSE DESCRIPTION

5.1.1. Bench Test Equipment

The Instrument Supplier will provide all test equipment required for bench test of the instrument This equipment shah include :

- GSE Computer
- DPU BCU/ SEM STC
- MEPED Buffer Box (Note 1)
- RSE (Radioactive Stimulus Equipment, Notes 1 and 3)
  - Eight 1 mCi (37 MBq) Ni-63 sources'for TED
  - Source holder that mounts directly to TED
  - One 100 µCi (3.7 MBq) Radium-226 source for MEPED
  - One 100 µCi (3.7 MBq) Caesium-137 source for MEPED
  - One 10 µCi (370 kBq) Americium-241 source for MEPED
  - Safety cover for source fixture
- Complete set of cables
- TED BCU (Notes 1 and 2) and Source Shield Controller (Note 1)
- MEPED BCU (Notes 1 and 2)
- TED/ MEPED Simulator (Note 2)

Note 1 : Used by the instrument supplier for the CPT (Comprehensive Performance Test - see RD7).

Note 2 : These-items will be used by the Instrument Supplier for on-site trouble shooting purposes on unit level (TED, MEPED, DPU) only.

Note 3 : Radioactive sources are specified by the Instrument Supplier and provided by ESA.

Figure 5 1 . 1 - 1 provides an overview of the bench test set-up.

The mains power interface is adaptable to the European standard by switches on the relevant units, or, units may be equipped with circuits that automatically detect the power form and adapt to it.

For tests at instrument level and tests at system level, sensor simulation shall be allowed as follows :

- Stimulation under ambient conditions shall be allowed for MEPED only. The Radium-226, Caesium-137 and Americium 241 sources will be positioned manually in front of the sensor. The Ra-226 source will be used to demonstrate detector aliveness while the Cs-137 and Am-224 sources verify the gain.

- The stimulation of the TED requires hard vacuum and will therefore be performed during TV testing only.

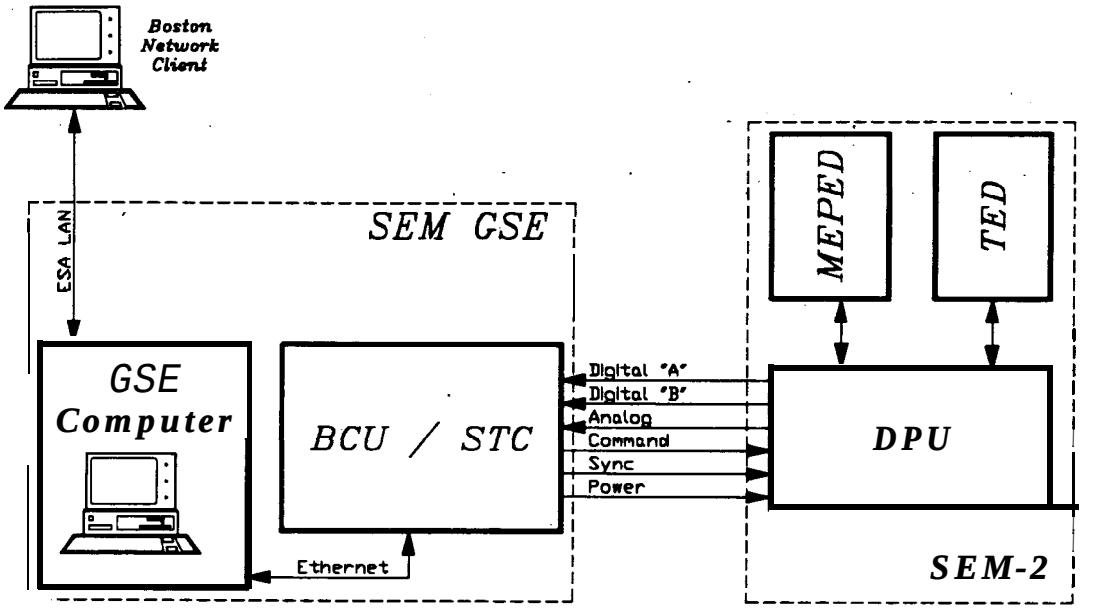

Figure 5.1.1-1: Overview of the Bench Test Set-Up

The following pieces of standard equipment, or functional equivalents thereof, may be provided by METOP for support of bench tests of the instrument and calibration of the GSE :

1. Oscilloscope, Tektronix Model 7704A
2. Vertical Plug-In, Tektronix Model 7A26
3. Time-Base Plug-In, Tektronix Model 7B80
4. True RMS Voltmeter,. Ballantine Model 323
5. Digital Multimeter, Fluke Model 75
6. DC Power Supply, 0-50V, 0-0.5A
7. Pulse Function Generator, Wavetek Model 191
8. Precision Voltage Supply, Systron-Dormer Model PLS-1
9. Decade Resistance Box, IET Model PLS-1

The Instrument Supplier will provide SEM-2 unique GSE to support MEPED CPT.

Note : Calibration of noncommercial GSE equipment will be done by the Instrument Supplier.

5.1.2. GSE for Integration with PLM OCOE

The instrument shall provide data processing equipment for connection to the METOP Data Acquisition and Processing Block for NOAA instruments (N-DAPB).

The data processing equipment will consist of the GSE computer with its associated hardware.

5.1.3. 'Mechanical Ground Support Equipment

Drill jig : N/A

Containers shall be supplied for shipping and storage at the METOP integration and test sites for each deliverable instrument.

The instrument storage containers will be sealed and backfilled with dry N_2 to one atmosphere.

Protective covers shall be delivered with each instrument for :

- TED aperture
- TED connectors
- One for MEPED omni-thermal shield
- One for each of the four MEPED telescopes
- MEPED connectors
- DPU connectors

5.1.4. Self-Contained Special Test Equipment

The radioactive sources fur stimulation of TED. and MEPED are self-standing items' which do not interface with any other elements of the METOP EGSE.

5.2. INSTRUMENT GSE INTERFACES

5.2.1. Interfaces with PLM OCOE

5.2.1.1. General

The configuration of the SEM-2 instrument test equipment within the overall checkout equipment for the METOP payload module is shown in Figure 5.2.1.1-l for the ambient test configuration and in Figure 5.2.1.1-2 for the TV testing. As far as SEM-2 delivered electrical ground support equipment is concerned, the test configuration for TV testing and tests at ambient is the same. The difference in set up is the use of the RSE, which will be used only during vacuum tests.

Details can be found in RD6.

Test set-up in TB is TBD_{MET}.

5.2.1.2. Stimulus/Feedback Equipment Interface

Not applicable to SEM-2 : RSE will be positioned in front of the sensors manually only.

5.2.1.3. Interface with Instrument provided Data Processing Equipment

5.2.1.3.1. Physical / Electrical Interface

The SEM-2 measurement data shall be made available to the instrument data processing equipment via a 100/10 Base-T Ethernet LAN interface.

5.2.1.3.2. Protocol Interface

The data sent to the instrument data processing equipment is the complete source packet as generated by the NIU.

For support of the measurement data processing, SEM-2 related housekeeping data, like digital "B" and analog data, as well as a copy of instrument related commands sent to the NIU, can be made available. For all communication between the instrument data processing equipment and the METOP provided N-DAPB, standard CCSDS source packets shall be used as unique protocol data units.

Further details on the protocol are defined in AD8 and AD15.

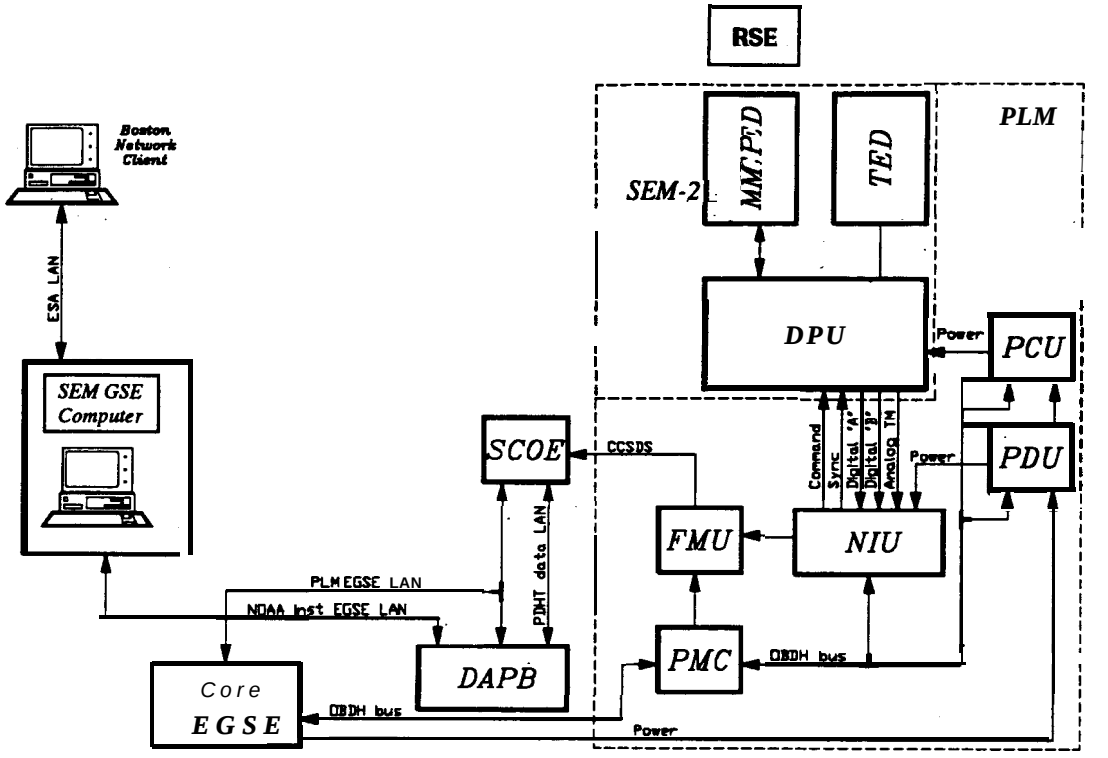

Figure 5.2.1.1-l : SEM-2 Test Set-Up in PLM Configuration

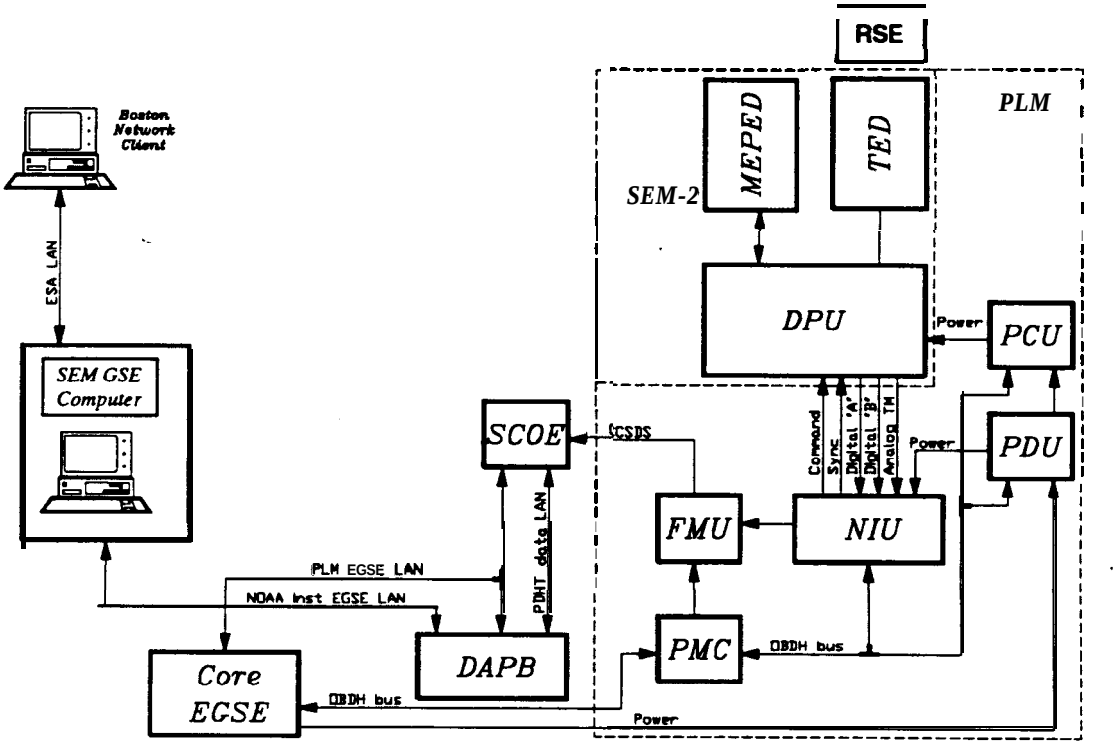

Figure 5.2.1.1-2 : SEM-2 Set-Up in TV Configuration

5.2.1.4. Measurement Data Evaluation

5.2.1.4.1. Instrument Measurement Data Format Definition

The instrument measurement data format is defined in § 3.3. The data is acquired by the NIU in a cyclic manner according to the timing specified in § 3.3. As a consequence, each instrument source packet at the output of the NIU will contain the same data in the same sequence.

The overall source packet layout is defined in Figure 5.2.1 .4- 1 below. The instrument measurement data format as defined in § 3.3 presents the user data space.

PACKET PRIMARY HEADER (6 Octets)							PACKET DATA FIELD		
								Source Data	
Packet Identification (2 octets)				Packet Sequence. Control (2 octets)		Packet Length (2 octets)	Secon-dary Header (6 oct.)	User Data (640 oct.)	Packet Error Control (2 octets)
Version Number 3 bits	Type Indic. 1 bit	Sec. Header Flag 1 bit	APID 11 bits	Seq. Flag 2 bits	Packet Seq. Count 14 bits		Time Stamp	See § 3.3.3.	
16 bits				16 bits		16 bits	48 bits		16 bits

Figure **5.2.4.1-l : *SEM-2* Source** *Packet Lay-Out*

Primary Header **Field**

packet Identification

The Packet ID Field will follow the following format :

Bit Position	Subfield Name	Set to	Code
0..2	Version Number	'Version 1'	000
3	Type Indicator	'TM'	0
4	Packet Secondary Header Flag	-	'1'
5..15	Application Process Identifier (APID)	'SEM-2	37

Packet Sequence Control

The Packet Sequence Control Field will follow the following format :

Bit Position	Subfield name	Set to	Code
0..1	Sequence Flag	'Unsegmented'	11
2..15	Packet Sequence Count	Incremented for each packet	Sequential binary continuous count

Packet Sequence Count is a method of counting the number of'packets generated by the application. This significant parameter is a sequential count of the Packet Sequence Control Fields. This field will start with a value of zero and increment to 3FFF (HEX, or 16384). At this point it will roll-over and continue again from zero. The count will re-start from zero after power-on. No reset of the count is allowed before reaching 16383.

Packet Length

This field contains a binary number which permits to identify the length of the User Data and Packet Error Control fields. Its value is defined as follows : ***number of octets of the*** *Packet* ***Data field - 1***.

Packet Data Field

The Source Data field is split in three parts.

The first part is the Secondary Header which is used for time code information. For SEM-2, the time stamp contains the NIU on-board time latched at the falling edge of the 32 second synchronization pulse.

The second part is the area that contains the user data, as described in § 3.3.2.

The third part is the Packet Error Control (PEC) field that consists of a Cyclic Redundancy Checksum (CRC), computed over all the octets composing the packets, except the PEC. The generator of the polynomial is : $G(x) = x^{16} + x^{12} + x^{5} + 1$.

5.2.1.4.2. Reference Data Presentation

N/A to SEM-2 : all data processing for SEM-2 will be done by the SEM-2 delivered data processing equipment

5.2.1.4.3. Data Comparison Requirements

N/A to SEM-2 : all data processing for SEM-2 will be done by the SEM-2 delivered data processing equipment.

5.2.1.4.4. Data Processing Algorithms

N/A to SEM-2 : all data processing for SEM-2 will be done by the SEM-2 delivered data processing equipment.

5.2.2. Interfaces with the PLM On-Board Equipment

5.2.2.1. Test Harness and Connectors

Not applicable.

5.2.2.2. Special Test Adapters (T-Junctions, Break-Out Boxes)

Instrument to PLM avionics interfaces are all via standard sub-D type connectors, therefore no special adapters are needed from the instrument.

Instrument is supplied with connector savers.

5.2.2.3. Stimuli Source Configuration / Arrangement Requirement.

The RSE sources for TED will be mounted to the instrument directly. The Ni-63 source test fixture assembly configuration is defined in AD16 (vacuum only).

The mounting of the RSE sources to the MEPED will be performed "manually" at ambient. The MEPED RSE is not used during MEPED TV test.

5.2.3. Interfaces with Other PLM GSE

N/A

5.2.4. Interfaces with AIT and Launch Site Facilities

5.2.4.1. Mains Power

The instrument test equipment will be operated from mains power via a METOP-provided isolation transformer with the following output characteristics :

- Voltage: 230 V AC (± 10%). 10 A max., single phase
- Frequency: 50 Hz ± 1 Hz
- Power plug standards used within the METOP project for 230 V is DIN 49441/CEE7, power sockets DIN 499440/CEE7

The actual estimated steady state power consumption of the instrument is as follows :

- DPU: < 1.2 VA
- TED: < 1.6 VA
- MEPED: < 3.2 VA
- GSE Computer : < 250 VA

- DPU BCU/ SEM STC : < 250 VA
- Buffer Box : < 25 VA

5.2.4.2. **Cooling / Thermal Dissipation Requirements**

N/A

5.2.4.3. Purging Gas Requirements

See § 6.1.4.

5.2.4.4. **GN_2 / LN_2 Supply**

For back-filling of transport and storage containers GN_2 per Fed. Spec. BB-N-441b Type 1, Class 1, Grade A or equivalent shall be used. TBC_{INST}

Before sealing the containers, a purging shah be performed for two hours according to AD17.

5.2.4.5. **Test Chamber Wall Feed-Through Panels**

Not applicable for PLM and system tests : the RSE source positioners are not operated electrically.

5.2.4.6. Public Data Net Communication Requirements

The METOP AIT and launch site facilities will provide access to a public data network in order to enable data exchange with Instrument Suppliers for off-line data evaluation at the SEM-2 Instrument Supplier premises.

As a baseline the file transfer procedures (FTP) via INTERNET will be used, however other TCP / IP application layers via INTERNET and / or modem can be discussed.

5.2.4.7. **Physical Interfaces**

(GSE weight, dimensions, floor loading, door width, and others TBD by SEM-2)

For set-up of the instrument test equipment, an area of 10 m2 as a minimum shah be provided in a temperature and humidity controlled class 100,000 clean area.

See AD18, AD19, AD20.

The TED, MEPED and DPU transport containers measure 43 cm wide by 41 cm deep by 32 cm high each.

5.3. INSTRUMENT GROUND OPERATION REQUIREMENTS

5.3.1. General

Instrument operational constraints are presented in § 1.4.1. Test procedures may deviate from these.

Instrument modes and in orbit operations are described in § 1.4 and § 1 .5.

Instrument telecommands are described in § 3.2.2.

For the ground operations, the acknowledgement of the commands by the instrument is done using Analog Housekeeping and Digital B data from the instrument, as described in § 3.2.3. and 3.2.4.

Conditions for Testing

	. TEST CONFIGURATION			
	Incoming Inspection Pre-Integration PLM Electrical Test S/L Test		PLM TV Test	
Test Objective	MEPED With Stimuli Ambient	TED No Stimulus Ambient	MEPED No Stimulus TV	TED With Stimuli . T v
Command Handling	Verification of command acceptance and execution			
HK Telemetry Check	Monitoring of HK telemetry data against predefined limits and change of on-command conditions			
Measurement Data	Via stimuli and / or IFC	Via IFC only	Via IFC only	Via stimuli and / or IFC
Detector Aliveness	Yes (with stimuli)	No	No	Yes (with stimuli)

Note : the MEPED stimuli can also be used in TV, but this is not baselined for METOP

Table 5.3.1-l : Use *if* *GSE and Stimuli* *for* SEM-2 *Testing*

5.3.2. Command and Control Sequences

The testability of the instrument depends on the usage of stimulus equipment as outlined in Table 5.3.1-1. Command and control sequences will be implemented in the checkout software of the METOP overall check-out equipment in terms of control files for automated testing. The control files will ensure that the instrument is operated and tested in accordance with the objectives given below. Control files will be coded on the basis of test procedures prepared by the METOP AIT team following inputs from the Instrument Supplier, and checked by the Instrument Supplier.

Control files shall take into account the generic operation requirements given above, and the special requirements for ambient and TV testing given in the following subchapters.

5.3.2.1. Ambient Conditions

Only the MEPED may be fully operated with stimuli under ambient condition. The sequences to be used are the ones described in § 1.5. (sequence to On Mode, during On mode, to Calibration Mode and to Off Mode).

Under ambient conditions, both TED and MEPED may be operated in Calibration (IFC) Mode with no stimulus. The sequences to trigger are :

1. The SEM-2 shall be turned on, in accordance to § 1.5.3.
2. TED and MEPED in-flight calibration shall be run as per § 1.55.
3. The SEM-2 shall be turned off, in accordance to § 1.5.2.1.

All sequences shall be carried out twice - once using µP System A and once using µP System B.

5.3.2.2. Thermal Vacuum Conditions

A minimum of 24 hours at $<10^{-5}$ Torr shall be allowed for outgassing prior to turning on the instrument.

Only the TED may be fully operated with stimuli under TV condition. The sequences to be used are the ones described in § 1.5. (sequences to On Mode, during On mode, to Calibration Mode and to Off Mode).

Under TV conditions, both TED and MEPED may be operated in Calibration (IFC) Mode with no stimulus. The sequences to trigger are :

1. The SEM-2 shall be turned on, in accordance to § 1.5.3.
2. TED and MEPED in-flight calibration shall be run as per § 1.5.5.
3. The SEM-2 shall be turned off, in accordance to § 1.5.2.1.

All sequences shall be carried out during the nominal, hot and cold phases, and twice during each phase - once using µP System A and once using µP System B.

The instrument may be left on during temperature transitions.

5.3.3. Hazards / Precautions

Units may not be turned on at intermediate pressure : the SEM-2 can only be operated at normal atmospheric pressure and at pressures below 10^{-5} Torr.

MEPED sensors are damaged at temperatures above +30 deg. C, as indicated by the internal temperature sensors (analog telemetry, § 3.2.3.3.).

See also § 6.1.4.

5.4. INSTRUMENT ACCEPTANCE AT AIT SITE

54.1. Unpacking/Packing and Handling Requirements

Instrument unpacking and packing shall be performed according to AD17.

5.4.2. Incoming Inspection

The incoming inspection starts as soon as instrument equipment arrives at the integration site. After unpacking under cleanroom conditions, the following will be carried out :

- Visual Inspection of Instrument and GSE
- Dimensional /flatness check
- Units Weighing
- Bench Testing

Bench Level Tests

Prior to installation and to the PLM and electrical integration with PLM avionics, the instruments shall undergo a bench level check-out to demonstrate aliveness and instrument readiness for the subsequent system level AIT activities.

The instrument will be set up on a test bench (e.g. a table with conductive surface) 'and shall be connected to the instrument test equipment. In those cases where instruments are accommodated on dedicated panels, they will be mounted directly to the panel. The panel itself is supported by a standard panel handling and turnover trolley. Then a series of checkout activities shall be carried out as required to validate the instrument readiness.

The test equipment (e.g. a portable bench test equipment) shall be provided by the Instrument Supplier and shah reside at the PLM and satellite AIV sites to support instrument troubleshooting if necessary. Operation of the instrument and its bench test equipment is done by the Instrument Supplier team with support of the METOP AIV team in accordance to the following instrument-provided procedures and manuals :

The Limited Performance Test (LPT) may be executed under ambient conditions without any RSE stimulus according to AD21.

The LPT will perform :

1. Low line voltage tests
2. High line voltage tests
3. Nominal line voltage tests
4. TED and MEPED heater tests at nominal line voltage
5. TED and MEPED IFCs at low, nominal and high voltages.

The test configuration is as per Table 5.3.1-1.

Another bench level test is the TED CPT and the MEPED CPT. For the MEPED CPT, ambient conditions are sufficient, while for TED CPT, the application of vacuum is mandatory. For the TED CPT, the TV chamber shall provide four feed-throughs : three feed&roughs with 26 pins and one with 4 1. The duration of this activity is estimated to be less than.3 days, excluding time for removal from the spacecraft (if applicable), re-integration (if applicable) and succeeding verification. The CPT is done in accordance to RD8 and RD9.

These tests shall be performed for final re-calibration with the instruments removed from the spacecraft, if necessary. These re-calibration tests are not baselined after delivery of SEM-2 to METOP, with the exception of a TED CPT performed only during the PLM TV test (TBC_{MET}).

5.4.3. Instrument Self-Compatibility Test

N/A

5.5. INTEGRATION ON METOP

5.5.1. Pre-Integration

Prior to the installation in the PLM, the instrument will be pre-integrated with the NIU and parts of the NIU test equipment as well as the power conditioning unit. The corresponding set-up of on-board units andgroundstmportecluipmentisshowninFigure5.5.1-1..

The purposes of the pre-integration activities is to verify electrical interfaces between instruments and NIU and PCU, to develop instrument specific test sequences, and to refine and validate the DAPB operation separately from the PLM level AIT in order to reduce the overall integration time.

The activities carried out with the instruments in the NIU pre-integration are electrical integration and instrument IST's as described in § 5.5.3 below.

The physical arrangement of the instruments during pre-integration will be on desks with conductive surface. The interconnection to the NIU and PCU is accomplished with a METOP-provided test cable harness. Pre-integration activities are done in a clean room environment as required.

After completion of the pre-integration activities the instruments together with the NIU and the PCU will be installed in the payload module. An abbreviated electrical integration and part of the IST's are then repeated.

The use of stimuli and EGSE is as per Table 5.3.1-1.

5.5.2. Mechanical / Thermal Integration

The instrument mechanical / thermal integration includes the following activities :

- Physical installation to associated PLM panels according to agreed procedures including thermal insulation / filling and other
- Mechanical adjustment as required
- Installation of thermal fillers/insulators as required
- Mounting of thermal blankets
- Bonding measurement between equipment case and PLM structure
- Mechanical integration of pre-integrated instrument panels to the payload carrier structure

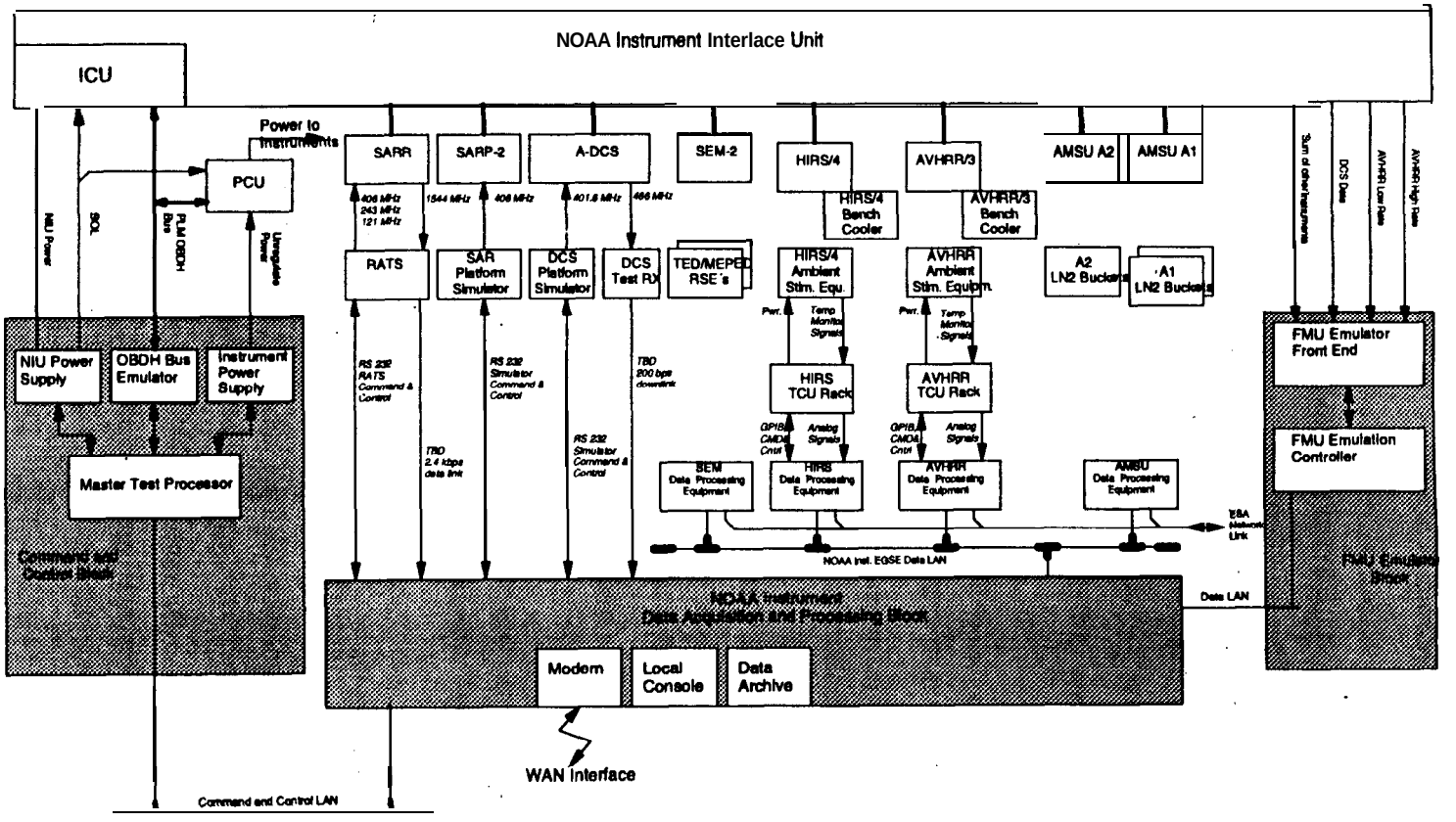

Note : Use of RSE only for MEPED.

Figure 5.5.1-1 : Set-Up for Instrument Pre-Integration

5.53. Electrical Integration and IST's

The electrical integration of the instrument is done after the integration of its GSE. The purpose of the electrical integration of the instrument on-board equipment is twofold : to verify that the interfaces between the instrument and the PLM avionics are as specified, and to accomplish instrument operation commissioning within the PLM environment

The following activities are carried out for electrical interface verification-:

Instrument Grounding/Isolation Check : before mating any connector with the system harness it is verified that designated grounding pins are properly terminated to chassis, and other connector pins are isolated

Safety Check : it is verified before connecting the system harness, that there is no unexpected dangerous . voltage, nor a short to chassis ground

T-Junction Tests : instrument connectors are mated with the PLM harness one by one via T-junctions, which allow measuring signal characteristics. Power connectors are mated first, followed by command interface connectors and telemetry interface connectors. The instrument is operated from the PLM Command & Control Block (CCB) by sending commands manually. Essential signal parameters such as rise/fall times, signal levels, signal timing, inrush currents and power consumption are recorded and compared against expected (specification) values.

The instrument electrical integration procedures will be prepared by the PLM AIT team on the basis of inputs from the Instrument Supplier, and reviewed and supported by the Instrument Supplier.

Verification of the instrument interfaces will be followed by an instrument IST. The purpose of this test is to perform a reference instrument check-out in the overall system environment.

The instrument will be operated in all 'relevant modes including degraded modes and redundancy activation. Full instrument operability validation is achieved in the IST. This comprises both the on-board equipment and the ground support equipment and check-out software. It is to be noted that the checkout software, at least the AIT data base with the TM/TC parameter definitions will be re-used during mission operation. Instrument specific control files will be refined and validated in the IST.

In addition to the above objectives, the IST serves to produce reference data sets for the subsequent environmental and system function test programs.

5.5.4. Integration of GSE

5.5.4.1. Integration of GSE with the Flight Equipment

The TED Stimulus Source Fixture mounts directly to the TED for vacuum (TV) testing.

5.5.4.2. GSE Integration with PLM OCOE

The EGSE integration is done prior to the integration of the on-board equipment. During this activity, the instrument-provided test equipment. shall be connected with the METOP provided PLM EGSE. Generally, EGSE integration basically consists of an end-to-end communication check to demonstrate full operability under control of the Command and Control Block (CCB).

The instrument GSE integration procedures will be prepared by the PLM AIT team on the basis of inputs from the Instrument Supplier, and review&d and supported by the Instrument Supplier.

5.6. INSTRUMENT OPERATION CONSTRAINTS DURING PLM AND SATELLITE SYSTEM TESTS

The RSE sources shall be removed from the instrument after use at instrument, PLM or system level, as soon as practical.

5.6.1. System Environmental Test Levels

'he TED Ion ESA Polarity Reversal plug shall be installed throughout all test sequences.

5.6.1.1. Structural Tests

The aperture covers and MEPED omni-thermal shield protective cover shall be removed.

5.6.1.2. Thermal Tests

The aperture covers and MEPED omni-thermal shield protective cover shall be removed.

During TV pump down phases, the SEM-2 must. not be operated at intermediate pressure values (see 5.3.3.).

5.6.1.3. EMC/RFC Tests

No specific requirement from SEM-2.

5.6.2. Function and Performance Tests

The following descriptions shall provide a better understanding of the system level tests and are to be understood as for information only.

The use of stimuli and EGSE is as per Table 5.3.1-1.

5.6.2.1. System Functional Tests (SFT)

The system functional test will verify the overall system performance and operability in a series of mission relevant modes. Back up modes, degraded modes and mode transitions will be included. The SFT procedures will be composed of control files which have been validated during IST's.

5.6.2.2. Special Performance Test (SPT)

SPT's serve to execute specific performance verifications in the overall system configuration for all those parameters which have contributions from more than one subsystem or for test cases which require a special set-up and operation condition. A typical example is a bit error performance test which involves elements of data acquisition, formatting and transmission.

For the instrument, it is assumed that full performance has been demonstrated as part of the instrument acceptance test program, and therefore no instrument specific performance testing is required on system level.

5.6.2.3. Abbreviated Functional Tests (AFT)

The abbreviated function test is composed'of a subset of control files and procedures from the system functional test. Its purpose is to demonstrate system integrity after major set-up changes and after transport. No measurement data evaluation will be included in the. AFT's but only a verification that the measurement data streams are present. Therefore, no instrument stimulus generation and feedback data acquisition will be done.

5.7. INSTRUMENT CONSTRAINTS ON GROUND ENVIRONMENTAL CONDITIONS

5.7.1. AIT Site

No calibration or recalibration is foreseen in the, METOP system AIV programme.

The test connector covers are flight hardware and shall remain installed at all times.

The aperture covers shall be removed when RSE is used.

Connector dust caps shall be installed when the instrument is not in use.

5.7.2. Launch Site

MEPED must be continuously be purged with dry air or dry N_2. (see § 6.1.4.).

5.7.3. Transportation

When not integrated on the spacecraft, transported instrument units shah be hand-carried by authorised personnel. The instrument units shall be in sealed containers which are pressurized with dry N_2. During transport, monitoring shock recorders and humidity indicators shah be used.

5.7.4. Storage

For instrument storage the sealed containers shall be back-filled with dry N_2 to one atmosphere. Purging is not required.

The storage temperature extremes shall be as per § 2.3.2.1.

The relative humidity outside the sealed shipping container housing the instrument unit shall not exceed 90%. When the shipping container is open the relative humidity to which the instrument unit is exposed shah not exceed 40%. Under no conditions shall the humidity be allowed to approach the dew point.

Other maintenance, e.g. calibration verification, is not planned during storage.

5.8. LAUNCH CAMPAIGN

5.8.1. Launch Preparation

Check-but on the Launch Range

Instrument launch operations before encapsulation of the satellite into the launcher fairing will be a series of functional tests as already done during the AIT phase. After encapsulation of the satellite, there will be only limited command and control access via umbilical to the service module and the payload module avionics. Therefore, instruments will generally not be operated after spacecraft encapsulation.

The TED Ion ESA Normal Polarity Plug must be installed prior to launch.

Furthermore it has to be assured that the test connector cover is installed.

5.8.2. Red Tagged Items

- Dust covers for instrument apertures and MEPED omni-thermal shield protective cover
- connector dust caps
- TED Ion ESA Reversal Plug

6. PRODUCT ASSURANCE

BLANK

Compliance of the SEM-2 with the following PA requirements is NASA's responsibility.

The PA approach for the SEM-2 is dealt within AD1. Specific PA constraints / rules are dealt within the following sections.

6.1. CLEANLINESS / CONTAMINATION

6.1.1. Deposited contamination Level

At the instrument delivery to METOP, the deposited contamination levels shall be less than :

- External surfaces :

  Molecular contamination : $\leq 2.10^{-7}$ g/cm²

  Particulate contamination : level 500, as per MIL-STD-1246B

- Internal surfaces : levels compatible with the instrument performances.

The-se contamination levels shall be certified at delivery, and verification performed after packing / transportation and arrival to the METOP integration site.

6.1.2. Integration Facilities

The instrument, after delivery, will be integrated in a class 100 000 clean room, as per FED-STD-209D, or better.

6.13. Instrument Aperture Protection

The SEM-2 is delivered with the following covers :

- TED aperture cover
- One cover for each of the four MEPED telescopes

All instrument functions can be checked with the protective covers installed (except measurement data generation).

As a general rule, all covers can only be removed in a class 100 000 clean or better. For PLM and satellite system tests, deviations from this rule are accepted, as dealt within § 5.6.

6.1.4. Purging

During transit and during storage, the SEM-2 units should be stored in its shipping container, that has been purged and back-filled with dry nitrogen.

The SEM-2 MEPED instrument requires continuous purge with dry air when integrated on the spacecraft, whenever the relative humidity is expected to exceed 40 % for more than 4 hours (purging procedures shall be in accordance to AD 17).

Dry and clean air purge (less than 3 ppm moisture and hydro-carbons at a rate of 2 SCFH) is preferred.

Dry and clean nitrogen purge may also be used for periods of up to three months.

The purge may be disconnected for periods not to exceed 24 hours during transit to or from test facilities.

The MEPED is provided with a purge port that accommodates a 3.175 mm diameter (TBC_{SEM}) tubing.

6.1.5. Space Conditioning

Bake-out of instrument harness and MLIs at 60 deg. C : TBD_{Instr}.

The last hot cycle of the thermal vacuum test performed at instrument level shall be maintained till the outgassing flux is less than 1.10^{-7} g/cm².hr for a duration of five successive hours. This shall be permanently monitored during the test by TQCMs facing the specimen The temperature of this last level shall be 60 deg. C (instrument unpowered), provided this does not harm any element of the instrument.

6.1.6. Contamination Witness Plate

The SEM-2 is delivered with a permanently installed witness plate (mirror) on the instrument. This is used for further control by the Instrument Supplier of the contamination after delivery for integration to the METOP spacecraft. The position of this mirror is illustrated in the Mechanical Interface Drawing (TBD_{SEM}).

At appropriate times, the witness plate will be removed and examined by the Instrument Supplier for contaminants... during which time an alternate witness mirror will be mounted on the instrument. As a minimum, such controls shall be performed at delivery of the PLM. with all instruments integrated to the Satellite Contractor, before and after TB / TV tests, and before launch.

6.1.7. Decontamination Features/Heaters

N/A for the SEM-2

6.1.8. Instrument Bagging

N/A for the SEM-2 MEPED and DPU.

The SEM-2 TED detector may be damaged by exposure to condensable volatile materials of organic composition. The TED shall be bagged with a TBD_{SEM} anti-static cover during the cure period of RTV or similar TBD_{MET} materials when such operations occur in the instrument bench check area or in the vicinity of the spacecraft if the TED is mounted on the spacecraft.

6.2. FAILURE PROPAGATION THROUGH THE INTERFACES

The failure propagation through the interfaces from the SEM-2 to METOP is analysed within TBD_{SEM}.

The failure propagation through the interfaces from the METOP to SEM-2 is analysed within TBD_{MET}.

6.3. SAFETY REGULATIONS

The SEM-2 shall be compliant with the safety requirements from AD 1.

The following is a list of hazards contained within the instrument, its associated Ground Support Equipment, and any other special equipment needed for transportation, handling, assembly, integration and test.

Hazard	Item
Radioactive Source	SEM-2 GSE only
Toxic Sources	None
Corrosive Materials	None
Pressurized Systems	None
Ignition Sources	None
Pyrotechnics / Ordonance	None
Cryogenics / Cooling Fluid	None

Table 6.1/1 : Hazard List

The following is a list of consequences of failures of the instrument, its associated GSE and any other special equipment needed for transportation, handling, assembly, integration and test.

Consequence	Reference to Safety File
Violation of mechanical requirements	None
Violation of elechical requirements	None
Unintentional pyro firing	None
Violation of radiation requirements	None
Unintentional ignition	None
Release of debris	None
Leakage / rupture	None
Unintentional deployment	None

Table 6.1/2 : Consequence of Failures